CITY OF OMAHA
STANDARD PLATE INDEX

SECTION 100.....SITE PREPARATION

100-01 ..... GEOTEXTILE FABRIC SILT FENCE
100-03 ..... CHANNEL AND SLOPE SOIL STABILIZATION MAT
100-04 ..... CONSTRUCTION ENTRANCE

SECTION 500.....RIGID PAVEMENT

500-01 ..... CONCRETE ALLEY PAVEMENT
500-02 ..... SIDEWALK CONSTRUCTION
500-03 ..... SIDEWALK LOCATION
500-10 ..... 25' RESIDENTIAL CONCRETE PAVEMENT
500-12 ..... 25' RESIDENTIAL ASPHALTIC CONCRETE PAVEMENT
500-13 ..... 25' RESIDENTIAL GRADING SECTIONS WITHOUT SIDEWALK
500-16 ..... 30' INDUSTRIAL CONCRETE PAVEMENT
500-20 ..... 38' 3 LANE CONCRETE PAVEMENT
500-30 ..... 50' 4 LANE CONCRETE PAVEMENT
500-32 ..... 62' 5 LANE CONCRETE PAVEMENT
500-40 ..... 66' 4 LANE DIVIDED CONCRETE PAVEMENT
500-42 ..... 68' 4 LANE DIVIDED CONCRETE PAVEMENT
500-46 ..... TYPICAL URBAN SINGLE LANE ROUNDABOUT
500-50 ..... CONCRETE PAVEMENT JOINTS
500-52 ..... CONCRETE CURBS
500-54 ..... CONCRETE MEDIANS (2 SHEETS)
500-56 ..... GRANITE CURBS
500-60 ..... CONCRETE PAVEMENT WIDENING AND MISCELLANEOUS
500-70 ..... CONCRETE DRIVEWAY (2 SHEETS)
500-82 ..... CONCRETE CURB RAMP (4 SHEETS)

SECTION 600.....STRUCTURAL CONSTRUCTION

600-04 ..... WALL STEP
600-06 ..... CURB WALL

SECTION 700.....SEWER/SUBSURFACE CONSTRUCTION

700-01 ..... SEWER BEDDING
700-03 ..... TYPE "A" SINGLE INLET
700-04 ..... TYPE "A" DOUBLE INLET
700-05 ..... TYPE "A" DOUBLE INLET (ALTERNATE)
700-07 ..... TYPE "SADDLE CREEK" SINGLE INLET
700-10 ..... TYPE "C" DOUBLE INLET
700-12 ..... TYPE "B-B" SINGLE BASIN GRATE INLET
700-15 ..... SANITARY SERVICE RISER
700-16 ..... RING AND BEEHIVE GRATE
700-17 ..... AREA INLETS (2 SHEETS)
700-18 ..... SAMPLING MANHOLES (3 SHEETS)
700-21 ..... CURB INLETS (5 SHEETS)
700-23 ..... CONCRETE COLLAR AND SEWER TAP
700-24 ..... PIPE PLUG
700-25 ..... SANITARY SEWER WATER MAIN CROSSING
700-30 ..... REINFORCED CONCRETE CURB INLET COVER WITH FACE ARMOR
700-40 ..... STORM SEWER MANHOLE
700-45 ..... SANITARY SEWER MANHOLE (2 SHEETS)
700-50 ..... SANITARY SEWER CLEAN-OUT
700-55 ..... SANITARY SEWER SERVICE RECONNECTION/RELOCATION
700-70 ..... FLARED END SECTIONS AND BAR GRATES
700-72 ..... TIMBER PILE PIPE SUPPORT
700-75 ..... IMPACT STILLING BASIN
700-83 ..... REINFORCED CONCRETE PIPE COUPLERS
700-90 ..... CAST IRON MANHOLE RINGS AND COVERS, MANHOLE STEPS (2 SHEETS)
700-92 ..... TYPE "A" FLAT CAST IRON GRATE AND FRAME
700-93 ..... TYPE "V" CAST IRON VANEGRATE, FRAME AND CURB INLET
700-94 ..... TYPE "SC" CAST IRON GRATE AND FRAME

SECTION 800.....ROADSIDE IMPROVEMENT

800-01 ..... CHAIN LINK FENCE AND CHAIN LINK FENCE GATE
800-02 ..... TREE PLANTING

NOTE: THE GREEN STREETS PLAN FOR OMAHA SERVES AS A GUIDE FOR DESIGN AND PLANNING OF THE DESIGNATED "GREEN STREETS" SYSTEM THROUGHOUT OMAHA. A MAP OF THE GREEN STREETS SYSTEM, DESIGN PROTOTYPES, DETAILS AND IMPLEMENTATION MEASURES FOR THE PLAN CAN BE FOUND AT THE CITY OF OMAHA PLANNING DEPARTMENT WEBSITE.

SECTION 900.....TRAFFIC CONTROL

900-01 ..... PULL BOXES
900-04 ..... CONCRETE PAD DETAIL FOR PAD MOUNTED CONTROLLER CABINET
900-10 ..... PEDESTAL POLES
900-20 ..... MAST ARM POLES
900-22 ..... MAST ARM POLE FOUNDATION
900-23 ..... MAST ARM TRANSFORMER BASE
900-24 ..... MAST ARM SIGNAL MOUNTING
900-30 ..... WOOD POLE SUPPORT CABLE (2 SHEETS)
900-32 ..... SUPPORT CABLE MOUNTING
900-40 ..... POLE BRACKET INSTALLATION
900-50 ..... STREET LIGHT POLE
900-60 ..... STANDARD SIGNAL FACE ARRANGEMENTS
900-70 ..... INDUCTIVE LOOP DETECTORS
900-72 ..... MAGNETIC DETECTOR INSTALLATION
900-74 ..... STANDARD TRAFFIC SIGNAL WIRING CODES
900-76 ..... ELECTRIC SERVICE PEDESTAL
900-78 ..... POWER SERVICE
900-80 ..... STREET NAME SIGN LAYOUTS (2 SHEETS)
900-82 ..... OVERHEAD MOUNTED SIGNS
900-84 ..... POST MOUNTED SIGNS
900-85 ..... SIGN POST ANCHORING SYSTEMS
900-90 ..... SPEED HUMP (2 SHEETS)
900-91 ..... SPEED TABLE (3 SHEETS)

SECTION 1000.....MAINTENANCE AND REPAIR

1000-01 ..... ASPHALT PAVEMENT RESURFACING ADJUSTMENT
1000-03 ..... PAVEMENT REPAIR (4 SHEETS)

SECTION 1100.....MISCELLANEOUS ITEMS

1100-01 ..... PRECAST CONCRETE PAVERS

ISSUE DATE: ..... DECEMBER 10, 2013

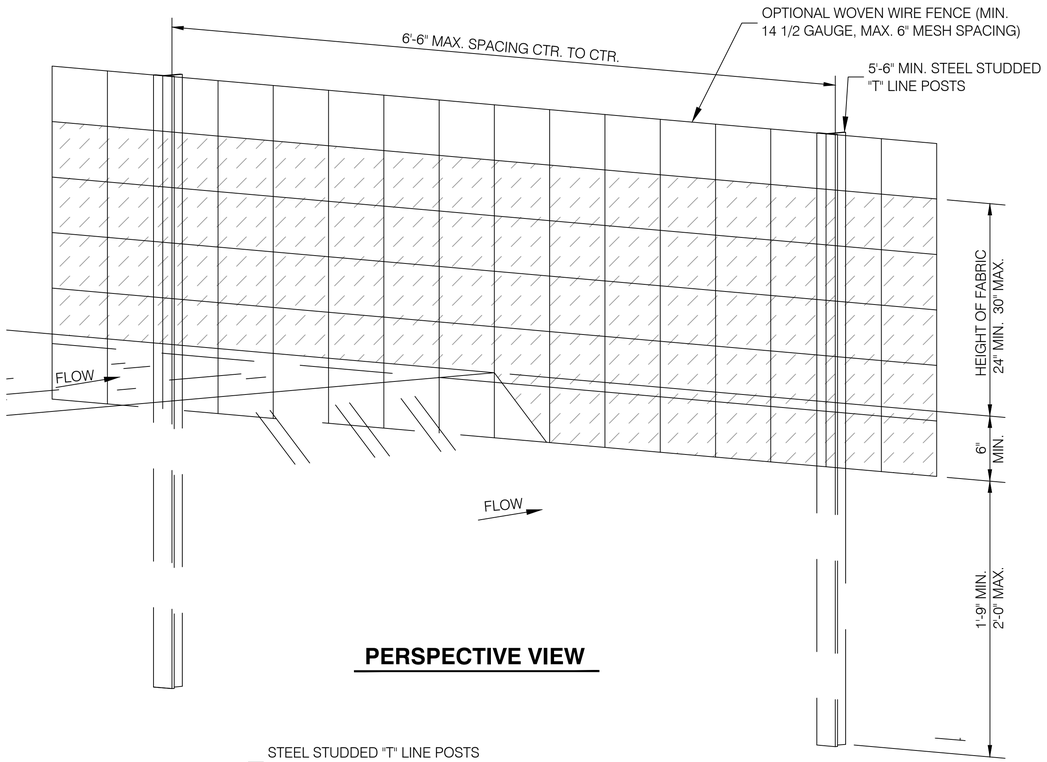

PERSPECTIVE VIEW

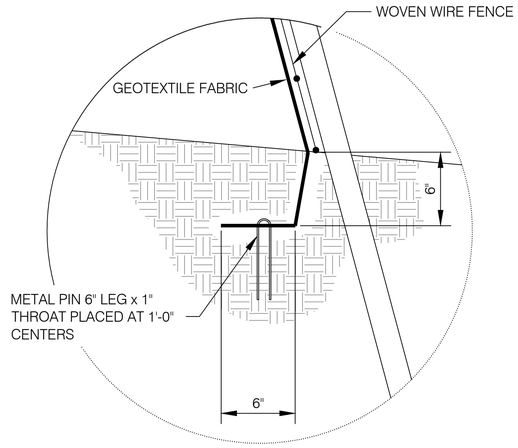

TRENCH DETAIL "A"

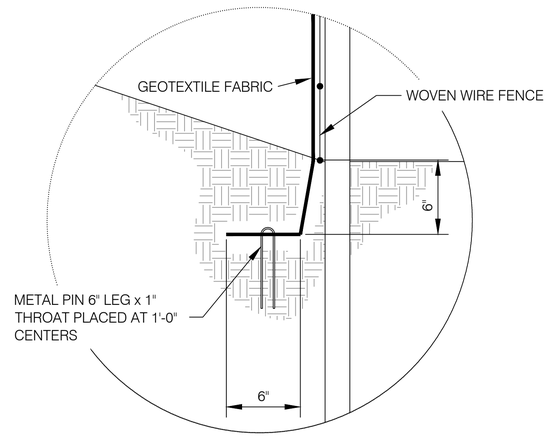

TRENCH DETAIL "B"

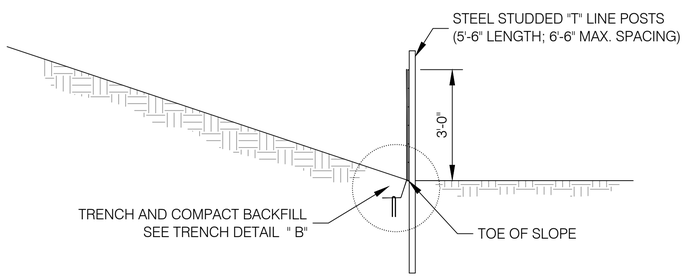

DETAIL OF GEOTEXTILE FABRIC AT TOE OF SLOPE

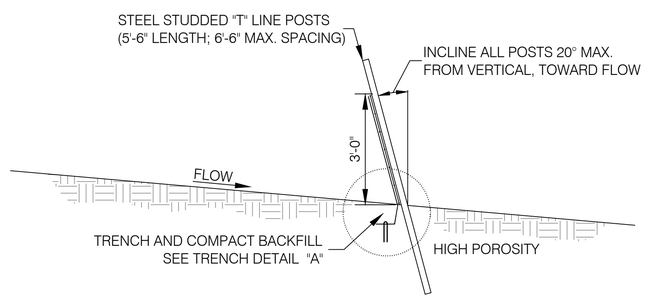

DETAIL OF GEOTEXTILE FABRIC

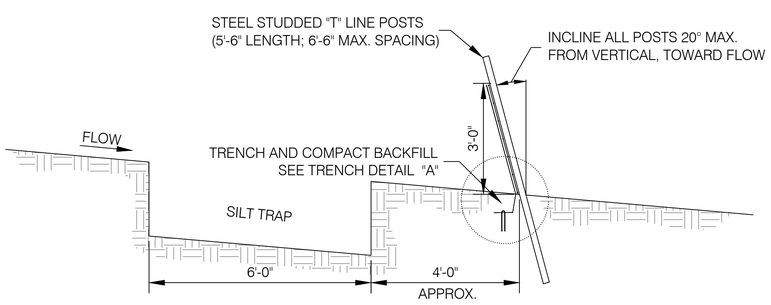

DETAIL OF GEOTEXTILE FABRIC AND SILT TRAP

NOTES

1. ALL MATERIALS AND INSTALLATION SHALL CONFORM TO SECTION 100 OF THE "STANDARD SPECIFICATIONS".
2. OPTIONAL WOVEN WIRE FENCE SHALL BE SECURELY FASTENED TO FENCE POSTS WITH WIRE TIES OR STAPLES.
3. GEOTEXTILE FABRIC SHALL BE SECURELY FASTENED TO WOVEN WIRE FENCE WITH TIES SPACED EVERY 24" AT TOP AND MID SECTION.
4. WHEN TWO SECTIONS OF GEOTEXTILE FABRIC ADJOIN EACH OTHER THEY SHALL BE OVERLAPPED BY SIX INCHES AND FOLDED.
5. MAINTENANCE SHALL BE PERFORMED AS NEEDED AND MATERIAL REMOVED WHEN "BULGES" DEVELOP IN THE GEOTEXTILE FABRIC.
6. THE MAXIMUM CONTRIBUTING DRAINAGE AREA SHALL BE 5 ACRES.

DESIGN ENGINEER	CITY OF OMAHA PUBLIC WORKS DEPARTMENT	
CITY ENGINEER	GEOTEXTILE FABRIC SILT FENCE	STANDARD PLATE 100-01 — SHEET 1/1
		ISSUE DATE: ..... DECEMBER 10, 2013

L:\Engineering\01101\02\DOCUMENTS\Standard Plates\ACAD Files from City\REVISED PLATE NUMBERS\PLT-100-01.dwg, 2/17/2014 9:07:68 AM, rrsk, 1:1.0241, Lamp, Rynearson & Associates

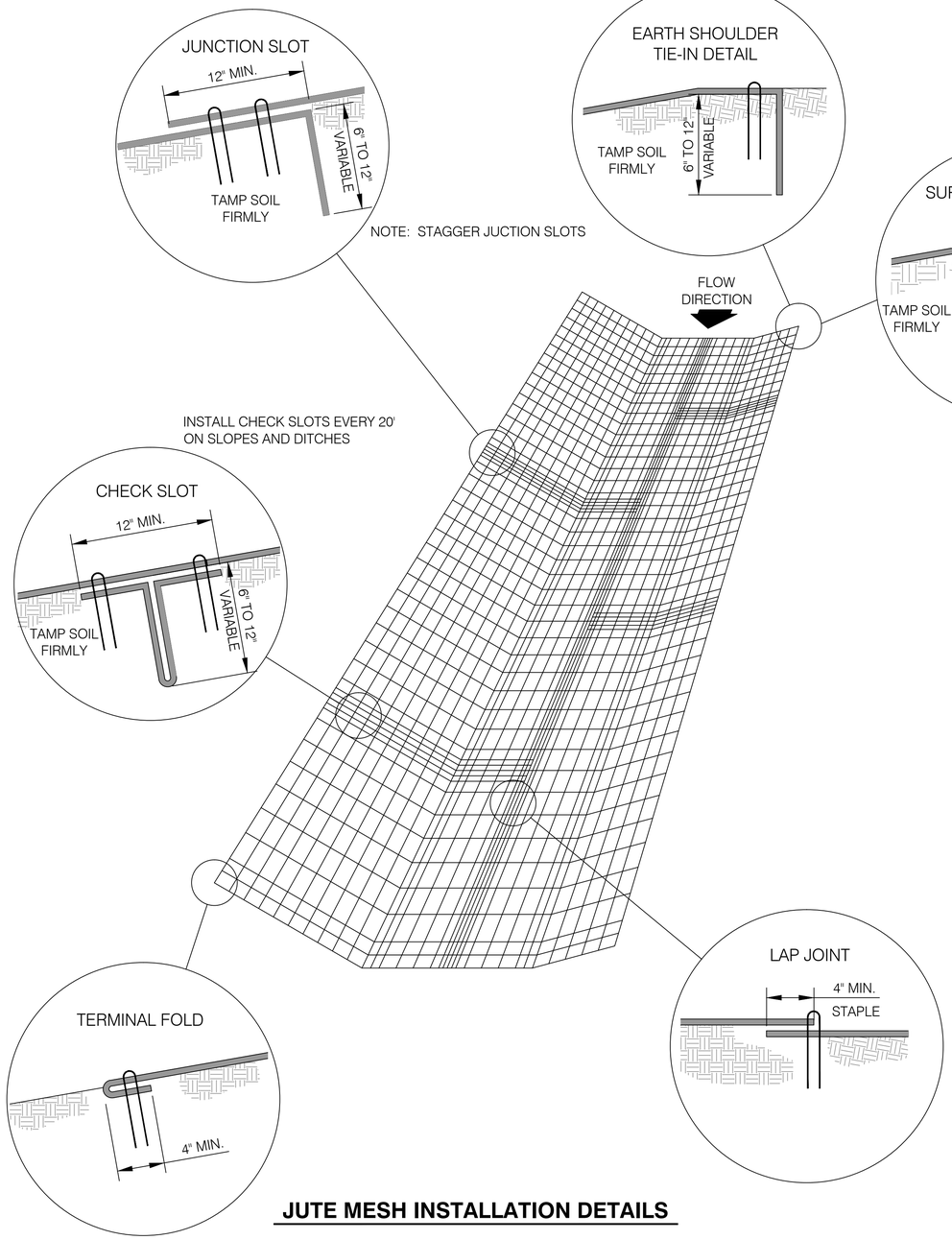

JUTE MESH INSTALLATION DETAILS

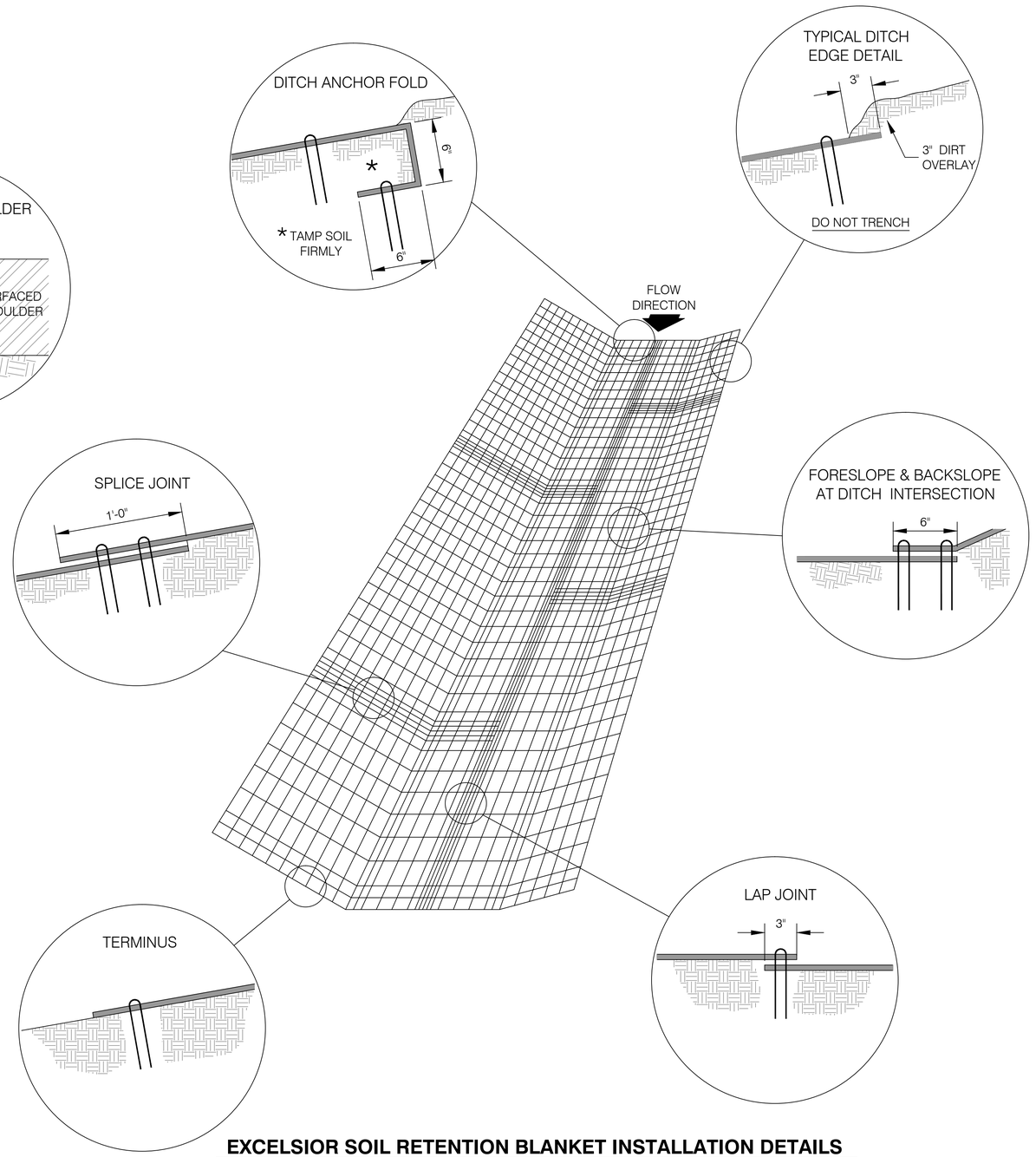

EXCELSIOR SOIL RETENTION BLANKET INSTALLATION DETAILS

L:\Engineering\01101\02\DOCUMENTS\Standard Plates\ACAD Files from City\REVISED PLATE NUMERS\PL T-100-03.dwg, 2/17/2014 9:10:12 AM, rick. 1:1.0241, Lamp, Rynerson & Associates

DESIGN ENGINEER	CITY OF OMAHA PUBLIC WORKS DEPARTMENT		
	CHANNEL AND SLOPE SOIL STABILIZATION MAT	**STANDARD PLATE 100-03**	SHEET 1/1
CITY ENGINEER		ISSUE DATE: ..... DECEMBER 10, 2013	

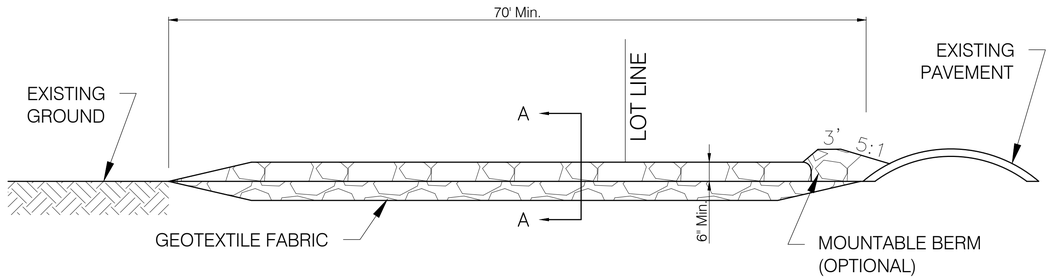

PROFILE

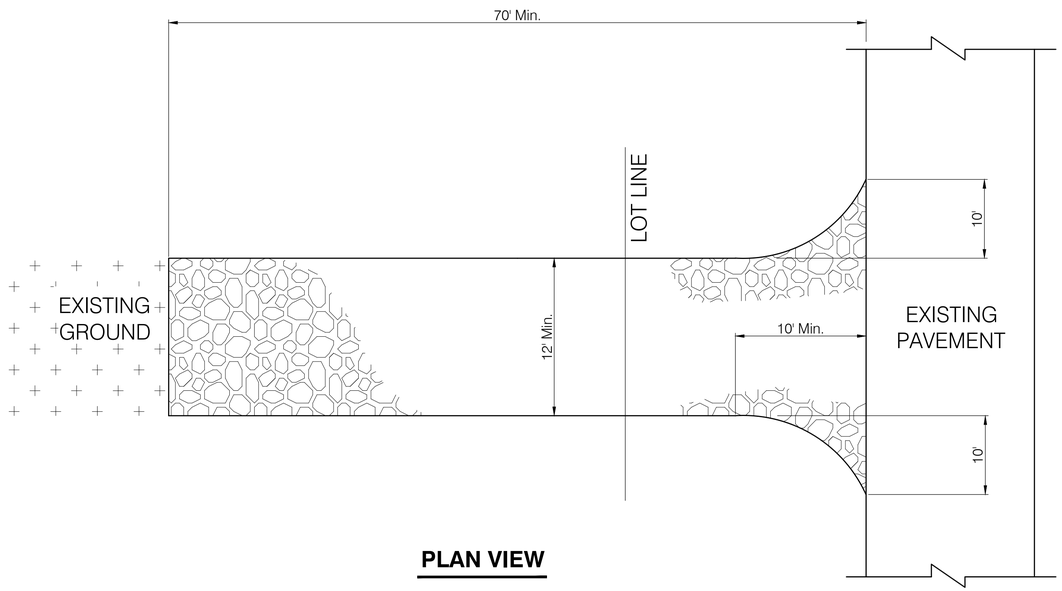

PLAN VIEW

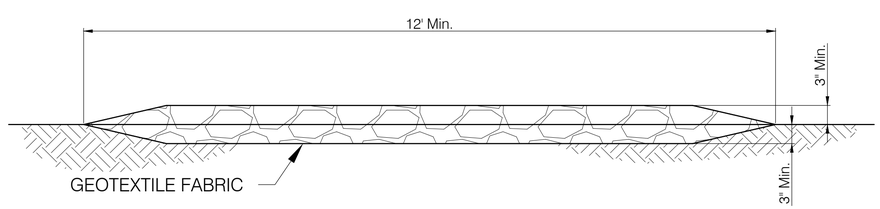

SECTION A-A

NOTES

1. THE AREA OF THE ENTRANCE MUST BE EXCAVATED A MINIMUM OF 3 INCHES AND MUST BE CLEAR OF ALL VEGETATION, ROOTS, AND OTHER OBJECTIONABLE MATERIAL. THE GETEXTILE FABRIC UNDERLINER WILL THEN BE PLACED THE FULL WIDTH AND LENGTH OF THE ENTRANCE
2. STONE SIZE - USE 3" CRUSHED STONE. RECLAIMED OR RECYCLED CONCRETE SHALL NOT BE ALLOWED.
3. LENGTH - AS REQUIRED, BUT NOT LESS THAN 50 FEET (EXCEPT ON A SINGLE RESIDENCE LOT WHERE A 30 FOOT MINIMUM LENGTH WOULD APPLY).
4. THICKNESS - NOT LESS THAN SIX (6) INCHES.
5. WIDTH - TWENTY (20) FOOT MINIMUM, BUT NOT LESS THAN THE FULL WIDTH AT POINTS WHERE INGRESS OR EGRESS OCCURS.
6. GEOTEXTILE FABRIC - WILL BE PLACED OVER THE ENTIRE AREA PRIOR TO PLACING OF STONE. FABRIC WILL NOT BE REQUIRED ON A SINGLE FAMILY RESIDENCE LOT.
7. SURFACE WATER - ALL SURFACE WATER FLOWING OR DIVERTED TOWARD CONSTRUCTION ENTRANCES SHALL BE PIPED ACROSS THE ENTRANCE. IF PIPING IS IMPRACTICAL, A MOUNTABLE BERM WITH 5H:1V SLOPES WILL BE PERMITTED.
8. MAINTENANCE - THE ENTRANCE SHALL BE MAINTAINED IN A CONDITION WHICH WILL PREVENT TRACKING OR FLOWING OF SEDIMENT ONTO PUBLIC RIGHTS-OF-WAY. THIS MAY REQUIRE PERIODIC TOP DRESSING WITH ADDITIONAL STONE AS CONDITIONS DEMAND AND REPAIR AND/OR CLEANOUT OF ANY MEASURES USED TO TRAP SEDIMENT. ALL SEDIMENT SPILLED, DROPPED, WASHED OR TRACKED ONTO PUBLIC RIGHTS-OF-WAY MUST BE REMOVED IMMEDIATELY. PERIODIC INSPECTION AND NEEDED MAINTENANCE SHALL BE PROVIDED AFTER EACH RAIN
9. WASHING - WHEELS SHALL BE CLEANED TO REMOVE SEDIMENT PRIOR TO ENTRANCE ONTO PUBLIC RIGHTS-OF-WAY. WHEN WASHING IS REQUIRED, IT SHALL BE DONE ON AN AREA STABILIZED WITH STONE AND WHICH DRAINS INTO AN APPROVED SEDIMENT TRAPPING DEVICE.

CONSTRUCTION ACCESS ROAD DETAIL

NO SCALE

		DESIGN ENGINEER	CITY OF OMAHA PUBLIC WORKS DEPARTMENT
		CITY ENGINEER	CONSTRUCTION ENTRANCE — STANDARD PLATE 100-04 — SHEET 1/1 — ISSUE DATE: ... DECEMBER 10, 2013

L:\Engineering\011010\DOCUMENTS\Standard Plates\ACAD Files from City\REVISED PLATE NUMERS\PL T-100-04.dwg, 3/10/2014 1:41:23 PM, rick. 1:1.0241, Lamp, Ryneerson & Associates

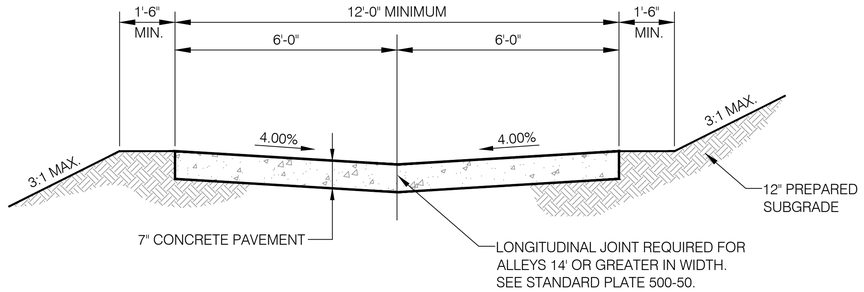

ALLEY PAVEMENT SECTION RESIDENTIAL TYPE

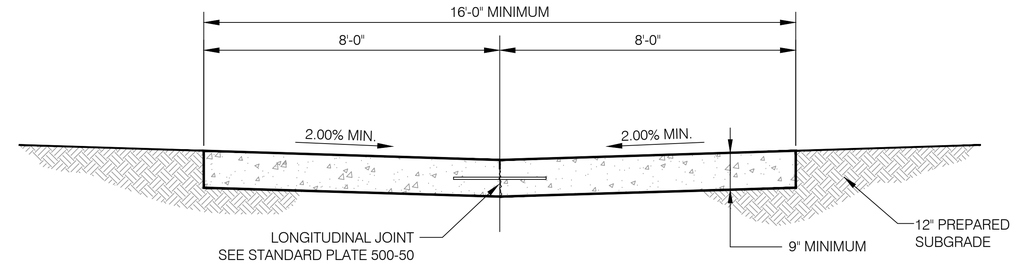

ALLEY PAVEMENT SECTION COMMERCIAL / INDUSTRIAL TYPE

ALLEY PLAN AT RETURN

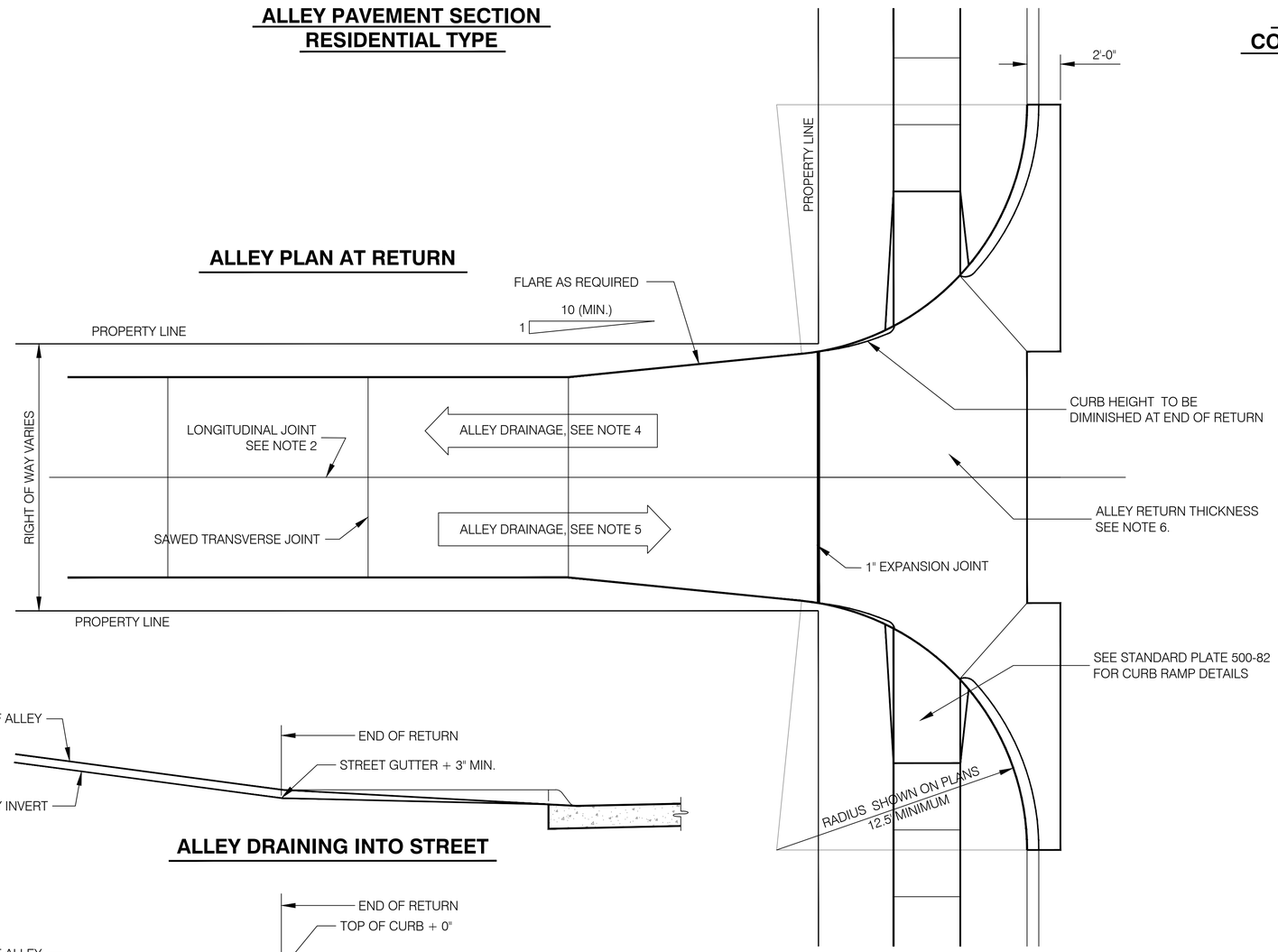

ALLEY DRAINING INTO STREET

ALLEY DRAINING AWAY FROM STREET

NOTES

1. CONSTRUCT CONCRETE PAVEMENTS IN ACCORDANCE WITH SECTION 500 OF THE STANDARD SPECIFICATIONS. PREPARE SUBGRADE IN ACCORDANCE WITH SECTION 200.
2. A LONGITUDINAL JOINT IS REQUIRED ON PAVEMENTS 14' OR GREATER IN WIDTH. SEE STANDARD PLATES 500-50 FOR JOINT DETAILS.
3. SAWED TRANSVERSE JOINTS SHALL BE SPACED AS FOLLOWS:
   7" THICKNESS..... 12' MAXIMUM
   9" THICKNESS..... 15' MAXIMUM
4. ALLEYS DRAINING AWAY FROM THE STREET SHALL HAVE ALLEY RETURN CONSTRUCTED WITHOUT INVERT AND ELEVATION AT THE END OF RETURN SHALL EQUAL THE STREET GUTTER PLUS 6".
5. ALLEYS DRAINING INTO THE STREET SHALL HAVE ALLEY RETURN CONSTRUCTED WITH THE INVERT FLOW LINE AT THE END OF RETURN EQUAL TO THE STREET GUTTER PLUS 3" MINIMUM.
6. ALLEY RETURN THICKNESS SHALL MATCH THICKNESS OF PAVEMENT BUT SHALL NOT BE LESS THAN 7".

	DESIGN ENGINEER	CITY OF OMAHA PUBLIC WORKS DEPARTMENT	
	CITY ENGINEER	CONCRETE ALLEY PAVEMENT	STANDARD PLATE 500-01 SHEET 1/1
			ISSUE DATE: ..... DECEMBER 10, 2013

L:\Engineering\011\01\DOCUMENTS\Standard Plates\ACAD Files from City\REVISED PLATE NUMBERS\PLT-500-01.dwg, 2/17/2014 9:25:03 AM, rick, 1:1.0241, Lamp, Ryneamson & Associates

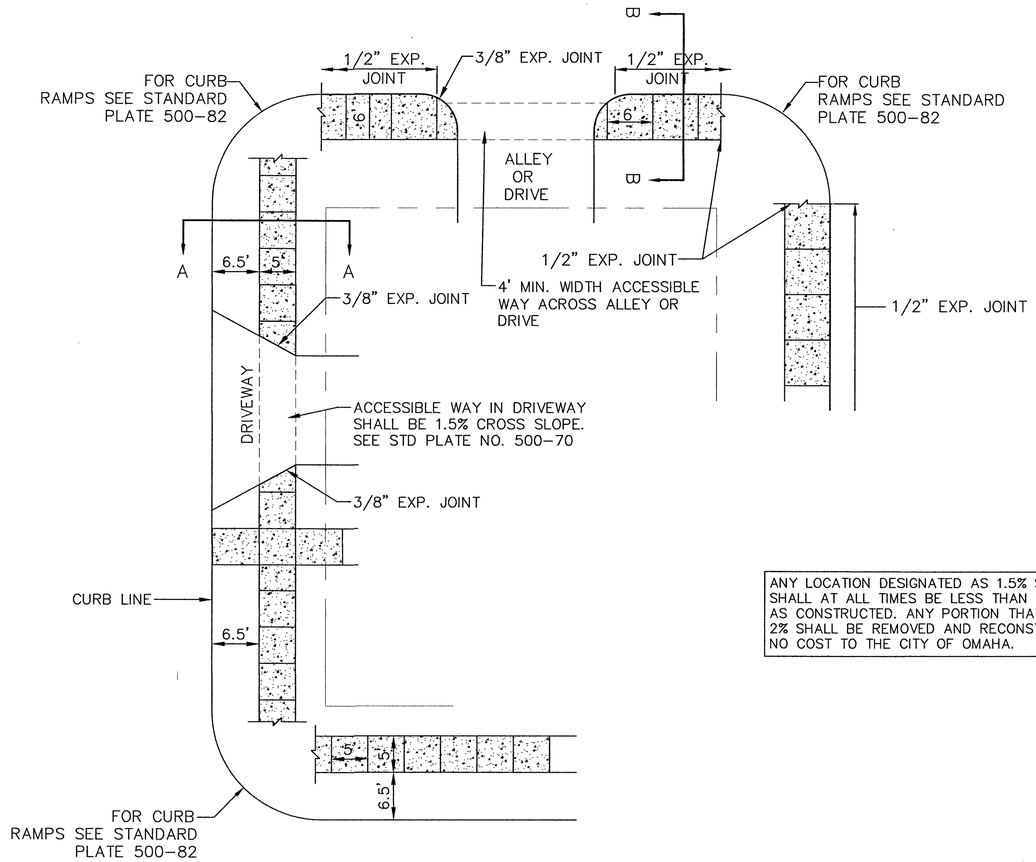

ANY LOCATION DESIGNATED AS 1.5% SLOPE SHALL AT ALL TIMES BE LESS THAN 2% MAXIMUM AS CONSTRUCTED. ANY PORTION THAT EXCEEDS 2% SHALL BE REMOVED AND RECONSTRUCTED AT NO COST TO THE CITY OF OMAHA.

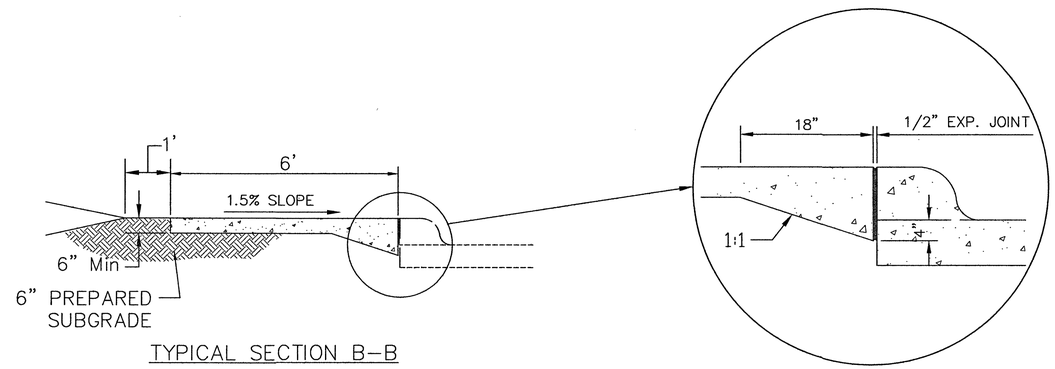

TYPICAL SECTION B–B

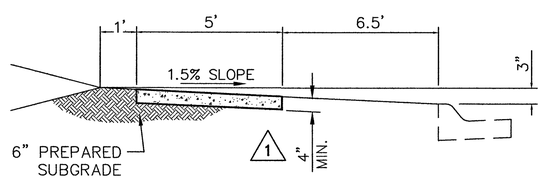

TYPICAL SECTION A–A

NOTES

1. CONCRETE FOR SIDEWALKS SHALL BE SG65 OR L6.
2. PREPARE SUBGRADE IN ACCORDANCE WITH SECTION 200, AND CONSTRUCT SIDEWALK WITH SECTION 500.
3. SIDEWALK SLOPE MAY BE VARIED TO SUIT EXISTING CONDITIONS. IN NO CASE SHALL THE MAXIMUM CROSS SLOPE EXCEED 2.0%. VARIATIONS TO SUIT EXTREME CONDITIONS TO BE AS DIRECTED BY THE ENGINEER.
4. NO SIDEWALK REPAIR SHALL BE LESS THAN ONE COMPLETE PANEL.
5. USE SEALING FILLER, HOT POURED TYPE, ON ALL EXPANSION JOINTS.
6. WHEELCHAIR RAMPS, SEE STANDARD PLATE 500-82, SHALL BE CONSTRUCTED AT ALL POINTS OF ENTRY.
7. CONTRACTION JOINTS SHALL BE SCORED TO A MINIMUM DEPTH OF T/4, WHERE T IS THE SIDEWALK THICKNESS.
8. CITY INSPECTION IS REQUIRED AFTER SIDEWALK IS FORMED AND BEFORE PLACING CONCRETE. PHONE (402) 444-5220 FOR INSPECTOR.
9. JOINT SPACING SHALL BE EQUAL TO THE WIDTH OF THE SIDEWALK.
10. FOR STREETS DESIGNATED AS "GREEN STREETS", REFER TO THE NOTE ON THE STANDARD PLATES INDEX SHEET.

1	6/3/2015	DESIGN ENGINEER CITY ENGINEER	CITY OF OMAHA PUBLIC WORKS DEPARTMENT **SIDEWALK CONSTRUCTION**	STANDARD PLATE **500-02** SHEET 1/1 ISSUE DATE: ... DECEMBER 10, 2013

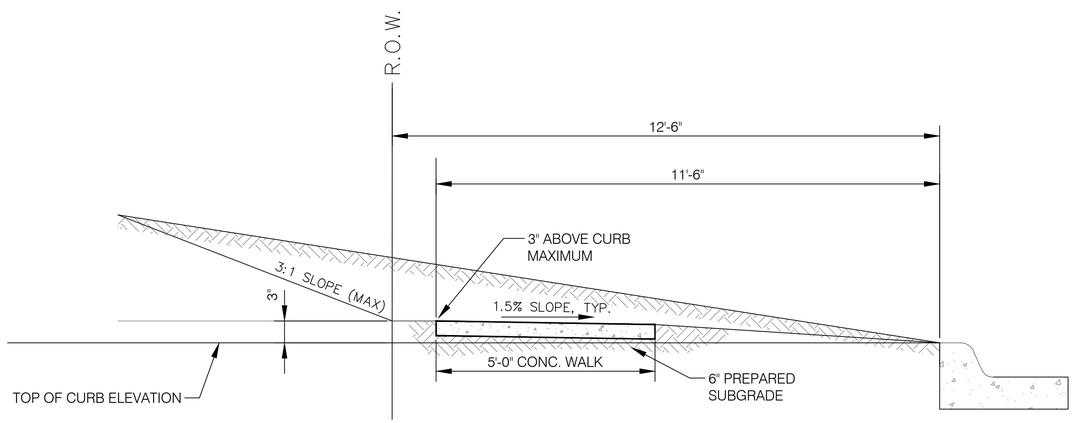

TYPICAL SECTION - CUT

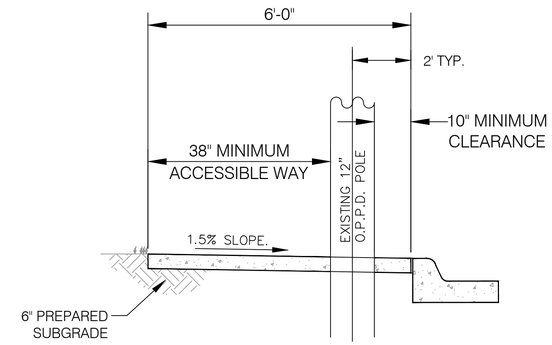

NOTE:
IF SIDEWALK IS CONSTRUCTED 6' WIDE
THERE WILL BE 38" OF CLEAR ACCESSIBLE WAY

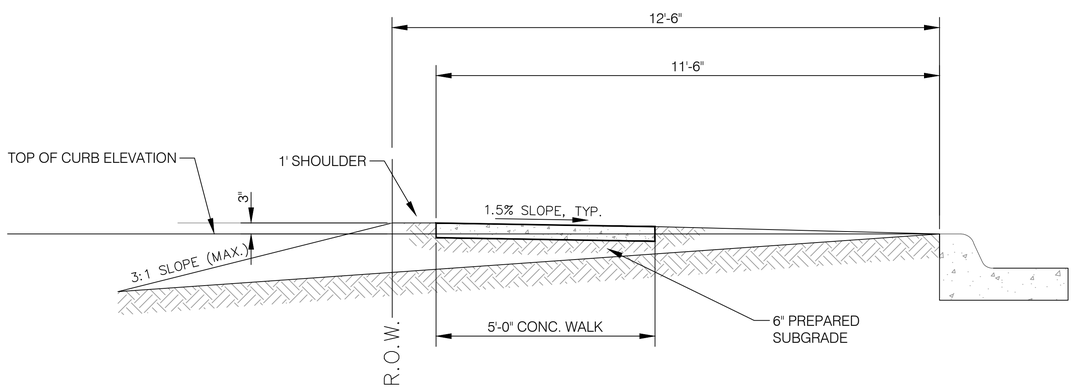

TYPICAL SECTION - FILL

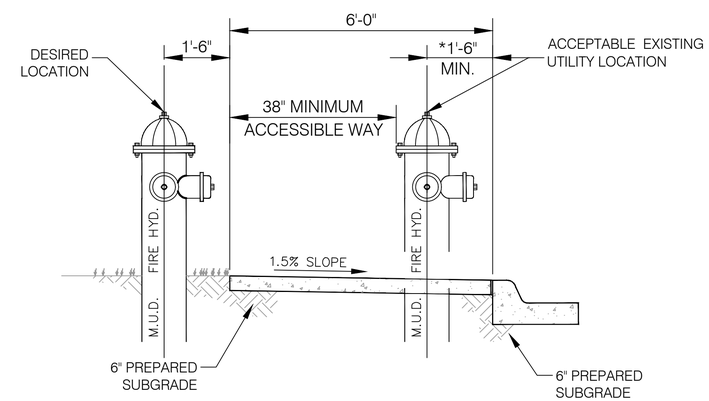

DETAILS SHOWING UTILITY PLACEMENT

*NEW UTILITY MINIMUM DISTANCE IS 2'-8".

ANY LOCATION DESIGNATED AS 1.5% SLOPE SHALL AT ALL TIMES BE LESS THAN 2% MAXIMUM AS CONSTRUCTED. ANY PORTION THAT EXCEEDS 2% SHALL BE REMOVED AND RECONSTRUCTED AT NO COST TO THE CITY OF OMAHA.

NOTES

1. FOR STREETS DESIGNATED AS "GREEN STREETS", REFER TO THE NOTE ON THE STANDARD PLATES INDEX SHEET.
2. CONSTRUCT CONCRETE PAVEMENT IN ACCORDANCE WITH SECTION 500 OF THE STANDARD SPECIFICATIONS. PREPARE SUBGRADE IN ACCORDANCE WITH SECTION 200.

DESIGN ENGINEER

CITY ENGINEER

CITY OF OMAHA PUBLIC WORKS DEPARTMENT

SIDEWALK LOCATION

STANDARD PLATE **500-03** SHEET 1/1

ISSUE DATE: ..... DECEMBER 10, 2013

L:\Engineering\011010\DOCUMENTS\Standard Plates\ACAD Files from City\REVISED PLATE NUMERS\PLT-500-03.dwg, 3/20/2014 1:28:47 PM, rdsk, 1:1.03774, Lamp, Rynearson & Associates

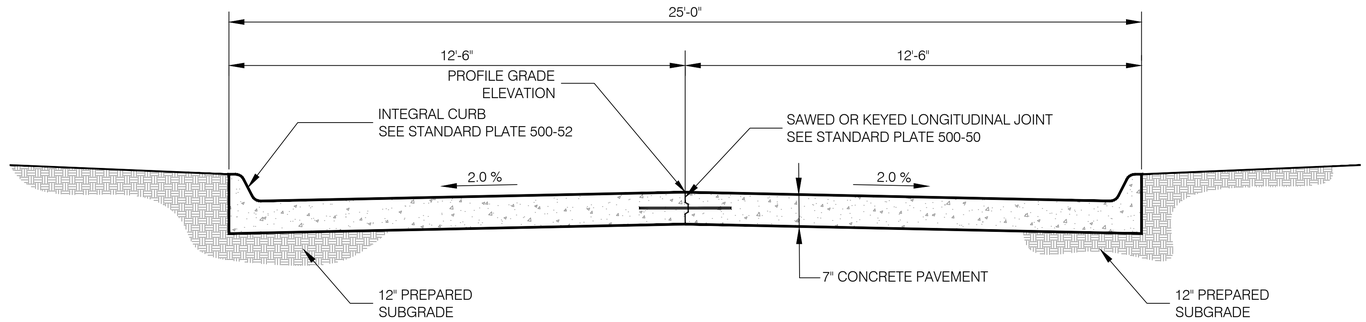

TYPICAL SECTION
25' RESIDENTIAL CONCRETE PAVEMENT

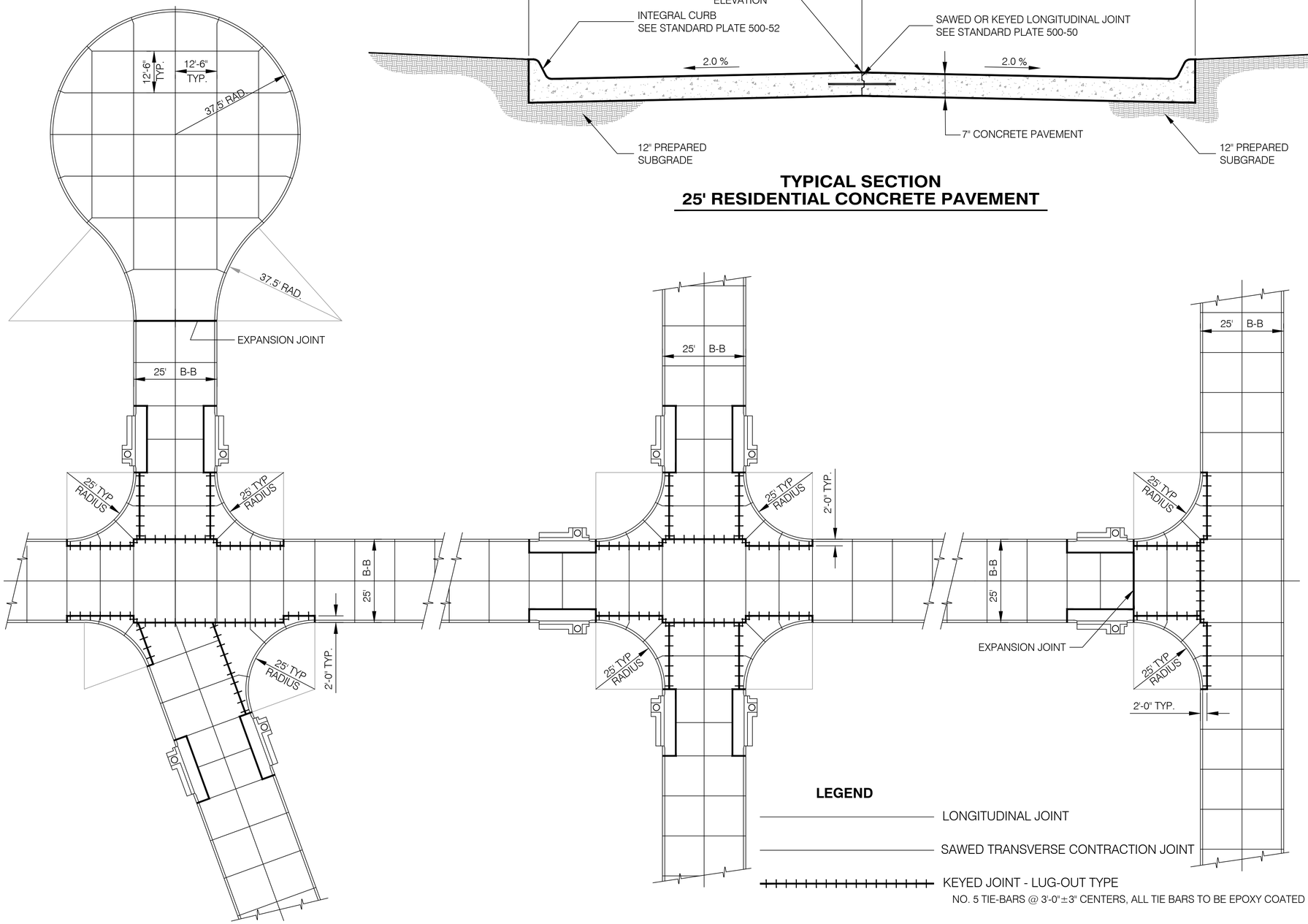

TYPICAL JOINT PLAN

NOTES

1. CONSTRUCT CONCRETE PAVEMENT IN ACCORDANCE WITH SECTION 500 OF THE STANDARD SPECIFICATIONS. PREPARE SUBGRADE IN ACCORDANCE WITH SECTION 200.
2. SEE STANDARD PLATE 500-50 FOR JOINT DETAILS.
3. WHEN BOTH LANES ARE PLACED AT THE SAME TIME THE LONGITUDINAL JOINT SHALL BE THE SAWED TYPE. THE KEYED TYPE LONGITUDINAL JOINT SHALL BE USED WHEN AN ADJACENT LANE IS NOT PLACED AT THE SAME TIME.
4. MAXIMUM SPACING FOR SAWED TRANSVERSE CONTRACTION JOINTS SHALL BE 12'.
5. TRANSVERSE JOINTS SHALL BE ALIGNED TO COINCIDE WITH THE CENTERLINE OF INTERSECTING SIDE STREETS WHEREVER POSSIBLE.
6. ALL SAWED TRANSVERSE JOINTS SHALL BE CONTINUOUS ACROSS THE PAVEMENT AND EXTEND THROUGH CURBS.

DESIGN ENGINEER

CITY ENGINEER

CITY OF OMAHA PUBLIC WORKS DEPARTMENT

25'-0" RESIDENTIAL CONCRETE PAVEMENT

STANDARD PLATE 500-10 SHEET 1/1

ISSUE DATE: ..... DECEMBER 10, 2013

L:\Engineering\01101\02\DOCUMENTS\Standard Plates\ACAD Files from City\REVISED PLATE NUMERS\PL T-500-10.dwg, 3/20/2014 1:39:32 PM, rick, 1:1.03774, Lamp, Rynearson & Associates

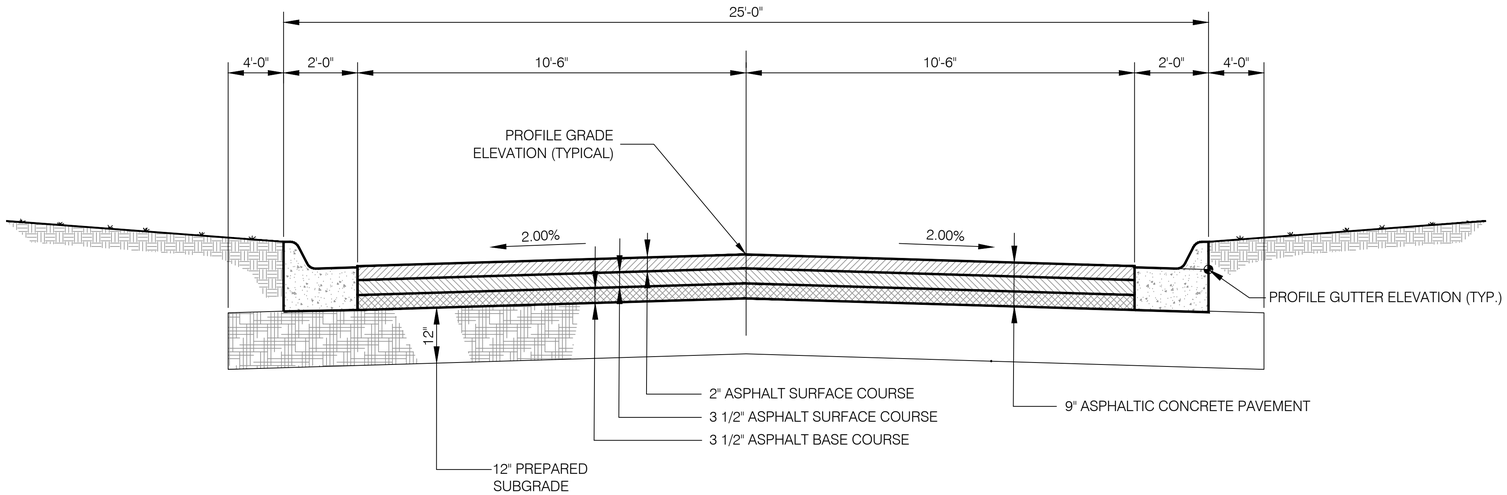

TYPICAL SECTION
25' RESIDENTIAL ASPHALTIC CONCRETE PAVEMENT

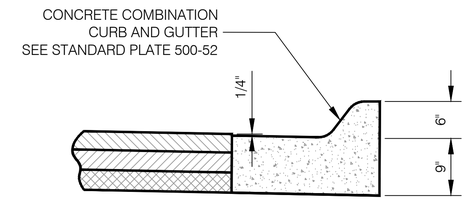

DETAIL AT CURB AND GUTTER

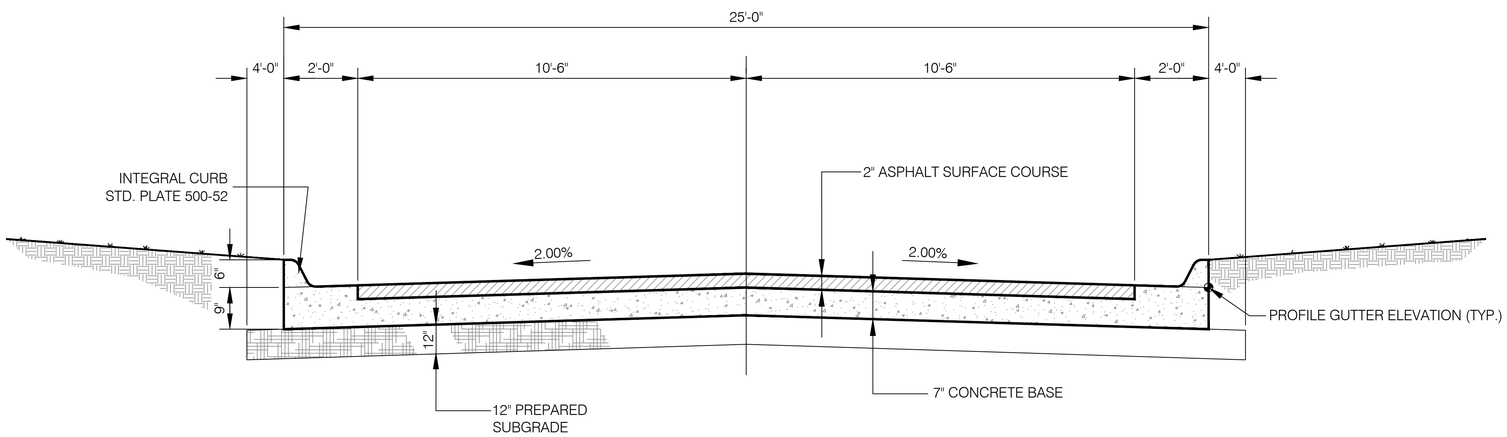

TYPICAL SECTION
25' RESIDENTIAL CONCRETE BASE COURSE

NOTES

1. CONSTRUCT CONCRETE BASE COURSE IN ACCORDANCE WITH SECTION 500 OF THE STANDARD SPECIFICATIONS. BITUMINOUS SURFACING SHALL CONFORM TO SECTION 400.
2. SUBGRADE SHALL CONFORM TO THE REQUIREMENTS OF SECTION 200 OF THE STANDARD SPECIFICATIONS.

		DESIGN ENGINEER	CITY OF OMAHA PUBLIC WORKS DEPARTMENT
		CITY ENGINEER	25'-0" RESIDENTIAL ASPHALTIC CONCRETE PAVEMENT
			STANDARD PLATE 500-12 — SHEET 1/1
			ISSUE DATE: ..... DECEMBER 10, 2013

L:\Engineering\011\012\DOCUMENTS\Standard Plates\ACAD Files from City\REVISED PLATE NUMERS\PLT-500-12.dwg, 3/6/2014 1:22:53 PM, rckk, 1:1.0241, Lamp, Rynearson & Associates

TYPICAL GRADING SECTION
FOR FUTURE 5'-0" SIDEWALK

TYPICAL GRADING SECTION
FOR FUTURE 6'-0" CURBWALK

		DESIGN ENGINEER	CITY OF OMAHA PUBLIC WORKS DEPARTMENT
		CITY ENGINEER	**25'-0" RESIDENTIAL GRADING SECTIONS WITHOUT SIDEWALK**
			STANDARD PLATE **500-13** SHEET 1/1
			ISSUE DATE: ..... DECEMBER 10, 2013

L:\Engineering\011010\DOCUMENTS\Standard Plates\ACAD Files from City\REVISED PLATE NUMERS\PLT-500-13.dwg, 3/20/2014 1:31:21 PM, rrdik, 11.03774, Lamp, Rynearson & Associates

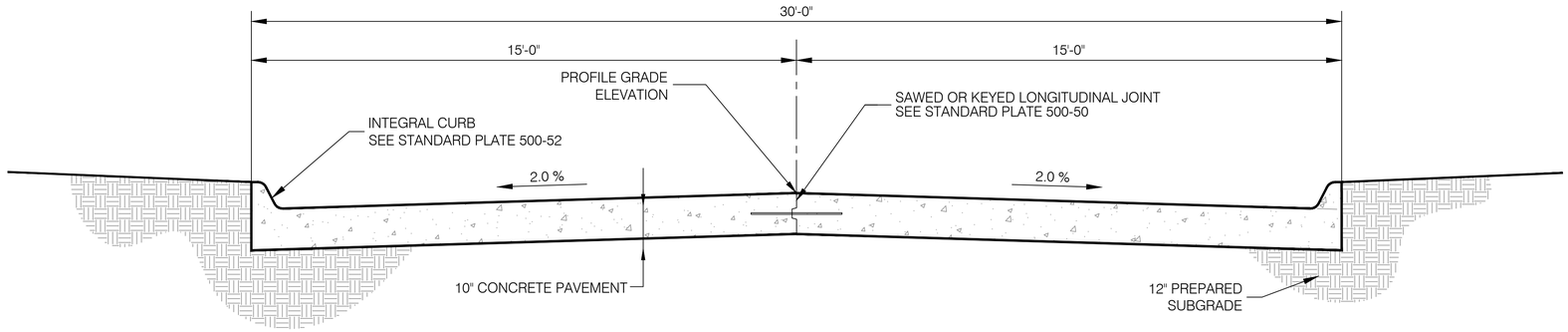

TYPICAL SECTION
30' INDUSTRIAL CONCRETE PAVEMENT

NOTES

1. CONSTRUCT CONCRETE PAVEMENT IN ACCORDANCE WITH SECTION 500 OF THE STANDARD SPECIFICATIONS. PREPARE SUBGRADE IN ACCORDANCE WITH SECTION 200.
2. SEE STANDARD PLATE 500-50 FOR JOINT DETAILS.
3. WHEN BOTH LANES ARE PLACED AT THE SAME TIME THE LONGITUDINAL JOINT SHALL BE THE SAWED TYPE. THE KEYED TYPE LONGITUDINAL JOINT SHALL BE USED WHEN AN ADJACENT LANE IS NOT PLACED AT THE SAME TIME.
4. MAXIMUM SPACING FOR SAWED TRANSVERSE CONTRACTION JOINTS SHALL BE 12.5'.
5. TRANSVERSE JOINTS SHALL BE ALIGNED TO COINCIDE WITH THE CENTERLINE OF INTERSECTING SIDE STREETS WHEREVER POSSIBLE.
6. ALL SAWED TRANSVERSE JOINTS SHALL BE CONTINUOUS ACROSS THE PAVEMENT AND EXTEND THROUGH CURBS.

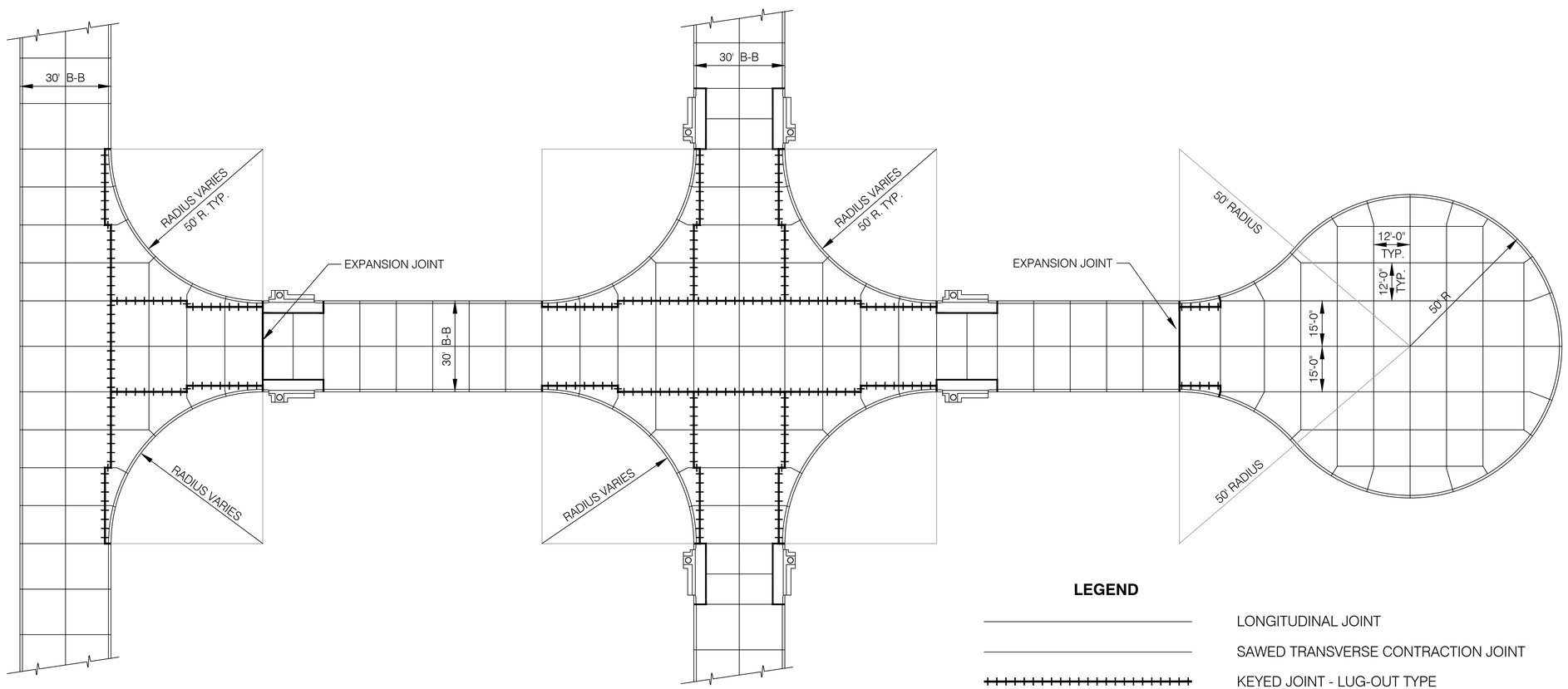

TYPICAL JOINT PLAN

		DESIGN ENGINEER	CITY OF OMAHA PUBLIC WORKS DEPARTMENT
		CITY ENGINEER	30'-0" INDUSTRIAL CONCRETE PAVEMENT — STANDARD PLATE 500-16 — SHEET 1/1 — ISSUE DATE: ..... DECEMBER 10, 2013

L:\Engineering\011010\DOCUMENTS\Standard Plates\ACAD Files from City\REVISED PLATE NUMERS\PLT-500-16.dwg, 3/20/2014 1:32:16 PM, rlstk, 1:1.03774, Lamp, Rynearson & Associates

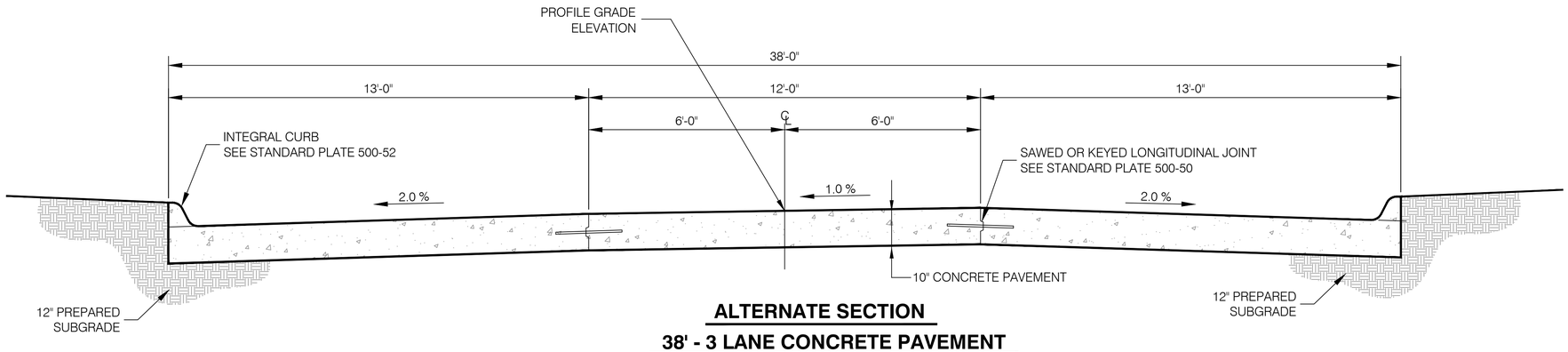

ALTERNATE SECTION
38' - 3 LANE CONCRETE PAVEMENT

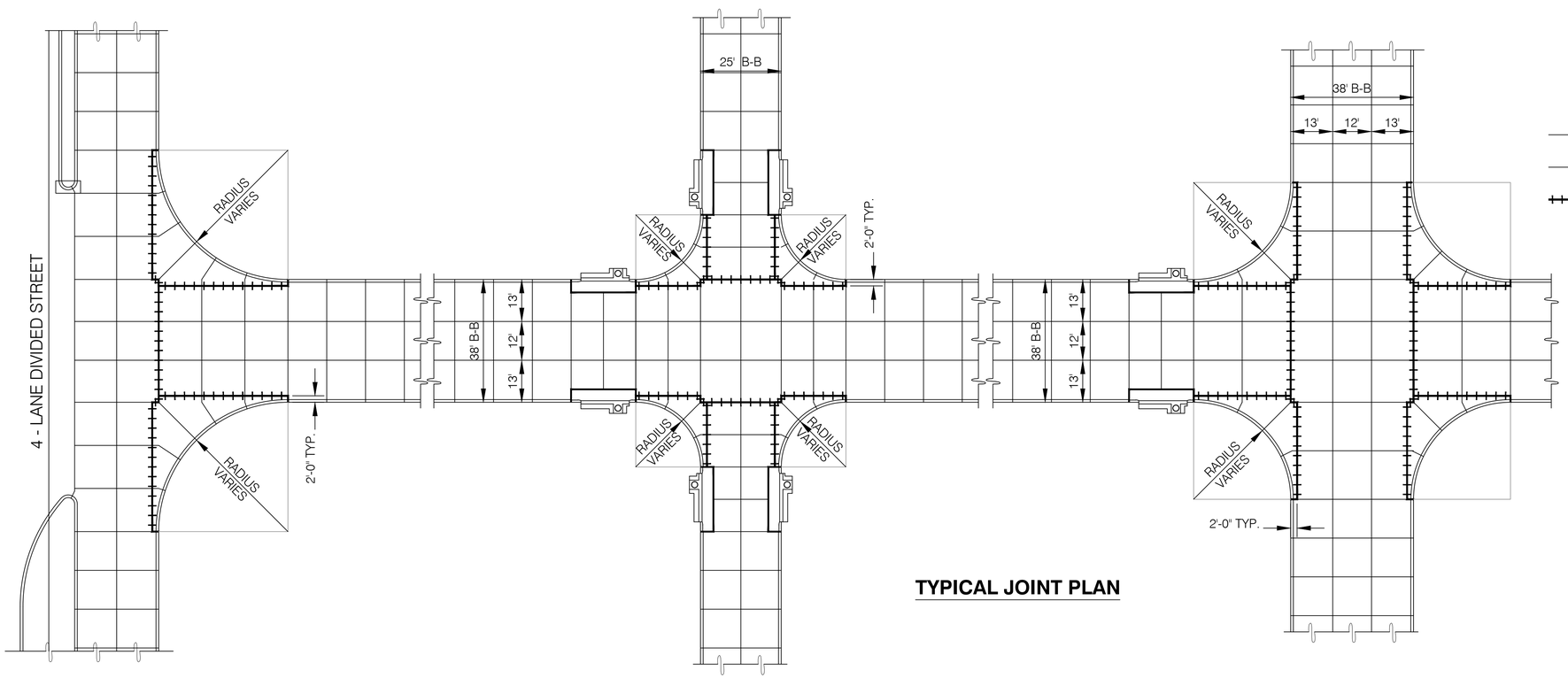

TYPICAL JOINT PLAN

LEGEND

- LONGITUDINAL JOINT
- SAWED TRANSVERSE CONTRACTION JOINT
- KEYED JOINT - LUG-OUT TYPE
  NO.5 TIE-BARS AT 3'-0"±3" CENTERS
  ALL TIE BARS TO BE EPOXY COATED

NOTES

1. CONSTRUCT CONCRETE PAVEMENT IN ACCORDANCE WITH SECTION 500 OF THE STANDARD SPECIFICATIONS. PREPARE SUBGRADE IN ACCORDANCE WITH SECTION 200.
2. SEE STANDARD PLATE 500-50 FOR JOINT DETAILS.
3. WHEN ADJACENT LANES ARE PLACED AT THE SAME TIME THE LONGITUDINAL JOINT SHALL BE THE SAWED TYPE.
   THE KEYED TYPE LONGITUDINAL JOINT SHALL BE USED WHEN AN ADJACENT LANE IS NOT PLACED AT THE SAME TIME.
4. MAXIMUM SPACING FOR SAWED TRANSVERSE CONTRACTION JOINTS SHALL BE 12.5'.
5. TRANSVERSE JOINTS SHALL BE ALIGNED TO COINCIDE WITH THE CENTERLINE OF INTERSECTING SIDE STREETS WHEREVER POSSIBLE.
6. ALL SAWED TRANSVERSE JOINTS SHALL BE CONTINUOUS ACROSS THE PAVEMENT AND EXTEND THROUGH CURBS.

DESIGN ENGINEER

CITY ENGINEER

CITY OF OMAHA PUBLIC WORKS DEPARTMENT

38'-0"....3 LANE CONCRETE PAVEMENT

STANDARD PLATE 500-20 SHEET 1/1

ISSUE DATE: ..... DECEMBER 10, 2013

L:\Engineering\01101\02\DOCUMENTS\Standard Plates\ACAD Files from City\REVISED PLATE NUMERS\PL T-500-20.dwg, 3/20/2014 1:33:11 PM, rick. 11.0374, Lamp, Rynearson & Associates

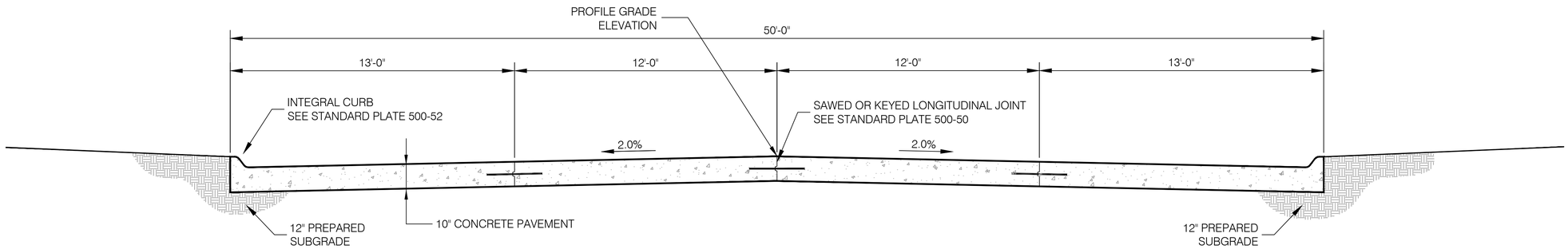

TYPICAL SECTION
50'-0" - 4 LANE CONCRETE PAVEMENT

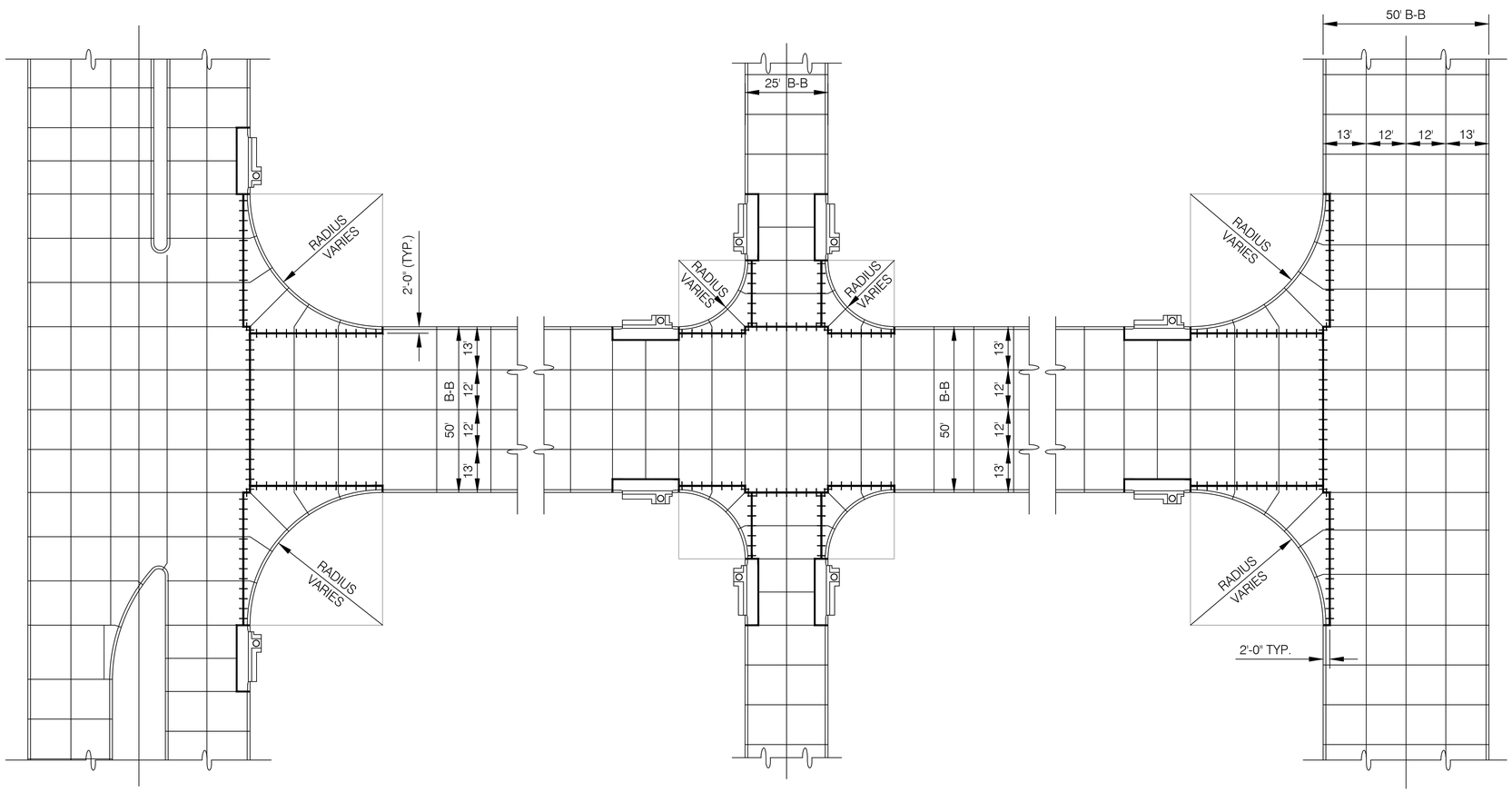

TYPICAL JOINT PLAN

LEGEND

LONGITUDINAL JOINT

SAWED TRANSVERSE CONTRACTION JOINT

KEYED JOINT - LUG-OUT TYPE

NO.5 TIE-BARS AT 3'-0"±3" CENTERS
ALL TIE BARS TO BE EPOXY COATED

NOTES

1. CONSTRUCT CONCRETE PAVEMENT IN ACCORDANCE WITH SECTION 500 OF THE STANDARD SPECIFICATIONS. PREPARE SUBGRADE IN ACCORDANCE WITH SECTION 200.
2. SEE STANDARD PLATE 500-50 FOR JOINT DETAILS.
3. WHEN BOTH LANES ARE PLACED AT THE SAME TIME THE LONGITUDINAL JOINT SHALL BE THE SAWED TYPE. THE KEYED TYPE LONGITUDINAL JOINT SHALL BE USED WHEN AN ADJACENT LANE IS NOT PLACED AT THE SAME TIME.
4. MAXIMUM SPACING FOR SAWED TRANSVERSE CONTRACTION JOINTS SHALL BE 12.5'.
5. TRANSVERSE JOINTS SHALL BE ALIGNED TO COINCIDE WITH THE CENTERLINE OF INTERSECTING SIDE STREETS WHEREVER POSSIBLE.
6. ALL SAWED TRANSVERSE JOINTS SHALL BE CONTINUOUS ACROSS THE PAVEMENT AND EXTEND THROUGH CURBS.

DESIGN ENGINEER

CITY ENGINEER

CITY OF OMAHA PUBLIC WORKS DEPARTMENT

50'-0" .... 4 LANE CONCRETE PAVEMENT

STANDARD PLATE **500-30** SHEET 1/1

ISSUE DATE: ..... DECEMBER 10, 2013

L:\Engineering\01101\DOCUMENTS\Standard Plates\ACAD Files from City\REVISED PLATE NUMERS\PLT-500-30.dwg, 3/20/2014 1:34:02 PM, rdok, 1:1.03774, Lamp, Rynearson & Associates

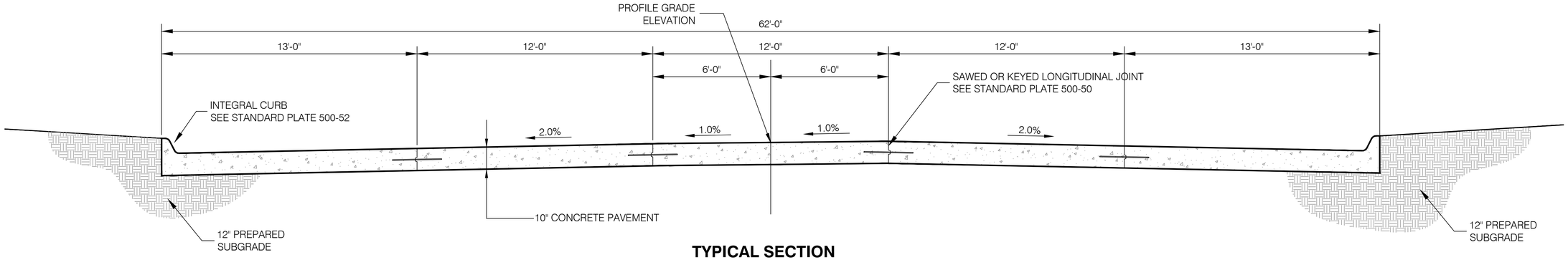

TYPICAL SECTION
62'-0" - 5 LANE CONCRETE PAVEMENT

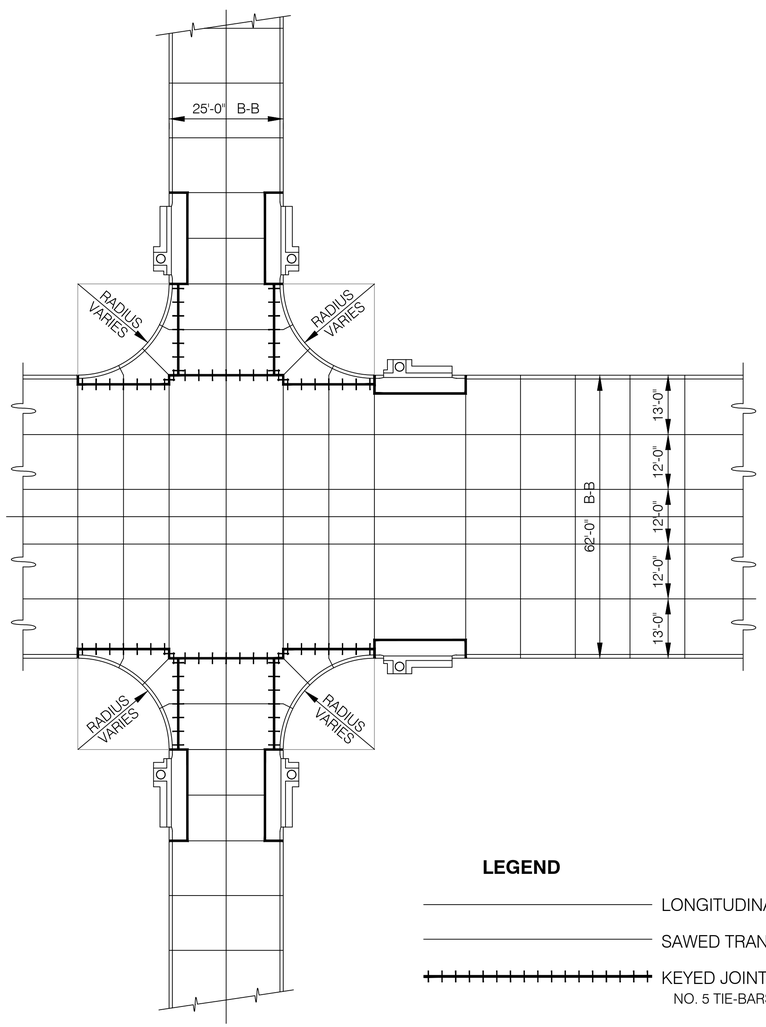

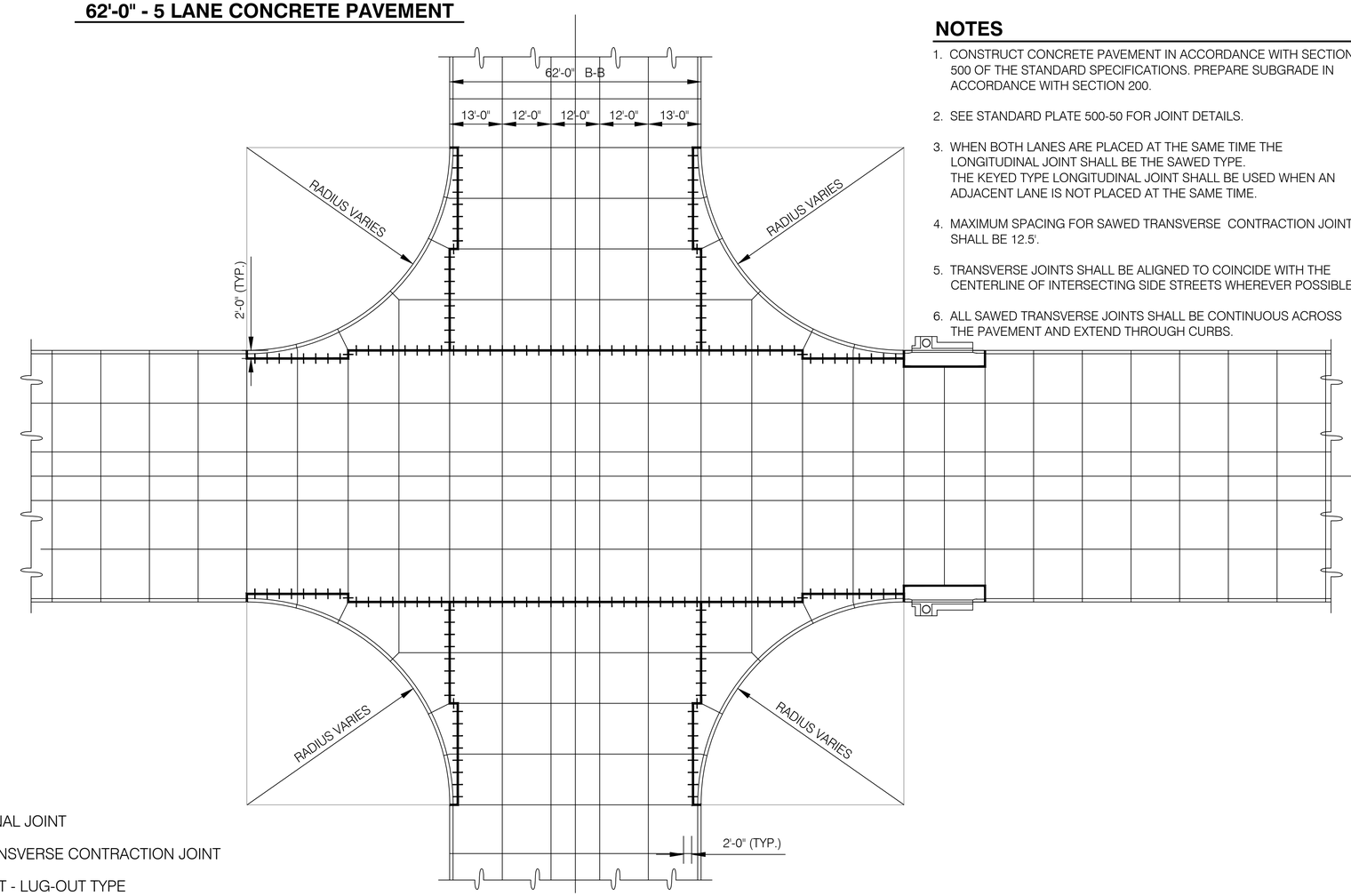

NOTES

1. CONSTRUCT CONCRETE PAVEMENT IN ACCORDANCE WITH SECTION 500 OF THE STANDARD SPECIFICATIONS. PREPARE SUBGRADE IN ACCORDANCE WITH SECTION 200.
2. SEE STANDARD PLATE 500-50 FOR JOINT DETAILS.
3. WHEN BOTH LANES ARE PLACED AT THE SAME TIME THE LONGITUDINAL JOINT SHALL BE THE SAWED TYPE. THE KEYED TYPE LONGITUDINAL JOINT SHALL BE USED WHEN AN ADJACENT LANE IS NOT PLACED AT THE SAME TIME.
4. MAXIMUM SPACING FOR SAWED TRANSVERSE CONTRACTION JOINTS SHALL BE 12.5'.
5. TRANSVERSE JOINTS SHALL BE ALIGNED TO COINCIDE WITH THE CENTERLINE OF INTERSECTING SIDE STREETS WHEREVER POSSIBLE.
6. ALL SAWED TRANSVERSE JOINTS SHALL BE CONTINUOUS ACROSS THE PAVEMENT AND EXTEND THROUGH CURBS.

LEGEND

LONGITUDINAL JOINT

SAWED TRANSVERSE CONTRACTION JOINT

KEYED JOINT - LUG-OUT TYPE
NO. 5 TIE-BARS AT 3'-0"±3" CENTERS ALL TIE BARS TO BE EPOXY COATED

	DESIGN ENGINEER	CITY OF OMAHA PUBLIC WORKS DEPARTMENT	
		62'-0" .... 5 LANE CONCRETE PAVEMENT	STANDARD PLATE 500-32 SHEET 1/1
	CITY ENGINEER		ISSUE DATE: ... DECEMBER 10, 2013

L:\Engineering\01101\DOCUMENTS\Standard Plates\ACAD Files from City\REVISED PLATE NUMERS\PLT-500-32.dwg, 3/20/2014 1:35:00 PM, rickk, 1:1.03774, Lamp, Rynearson & Associates

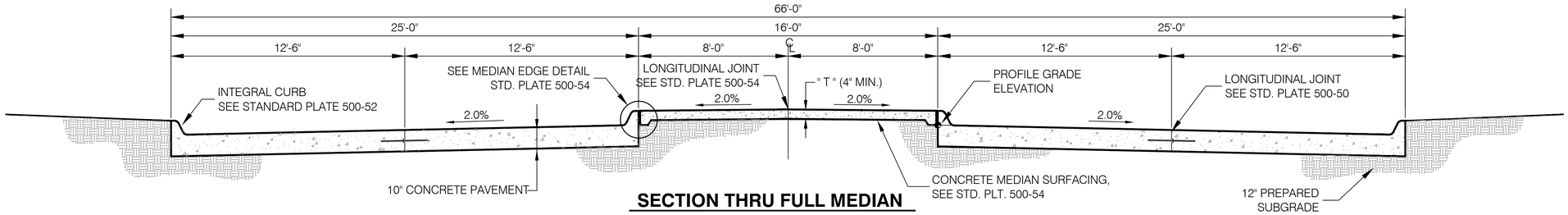

SECTION THRU FULL MEDIAN

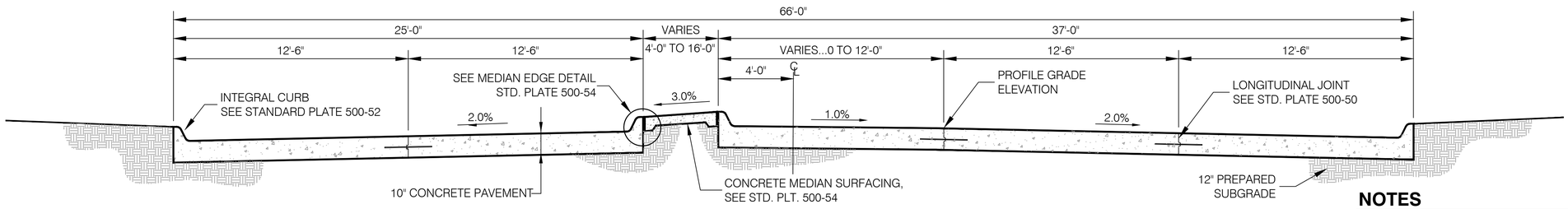

SECTION THRU LEFT TURN LANE

NOTES

1. CONSTRUCT CONCRETE PAVEMENT IN ACCORDANCE WITH SECTION 500 OF THE STANDARD SPECIFICATIONS. PREPARE SUBGRADE IN ACCORDANCE WITH SECTION 200.
2. SEE STANDARD PLATE 500-50 FOR JOINT DETAILS.
   SEE STANDARD PLATE 500-54 FOR CONCRETE MEDIAN DETAILS.
3. WHEN BOTH LANES ARE PLACED AT THE SAME TIME THE LONGITUDINAL JOINT SHALL BE THE SAWED TYPE.
   THE KEYED TYPE LONGITUDINAL JOINT SHALL BE USED WHEN AN ADJACENT LANE IS NOT PLACED AT THE SAME TIME.
4. MAXIMUM SPACING FOR SAWED TRANSVERSE CONTRACTION JOINTS SHALL BE 12.5'.
5. TRANSVERSE JOINTS SHALL BE ALIGNED TO COINCIDE WITH THE CENTERLINE OF INTERSECTING SIDE STREETS WHEREVER POSSIBLE.
6. ALL SAWED TRANSVERSE JOINTS SHALL BE CONTINUOUS ACROSS THE PAVEMENT AND EXTEND THROUGH CURBS.

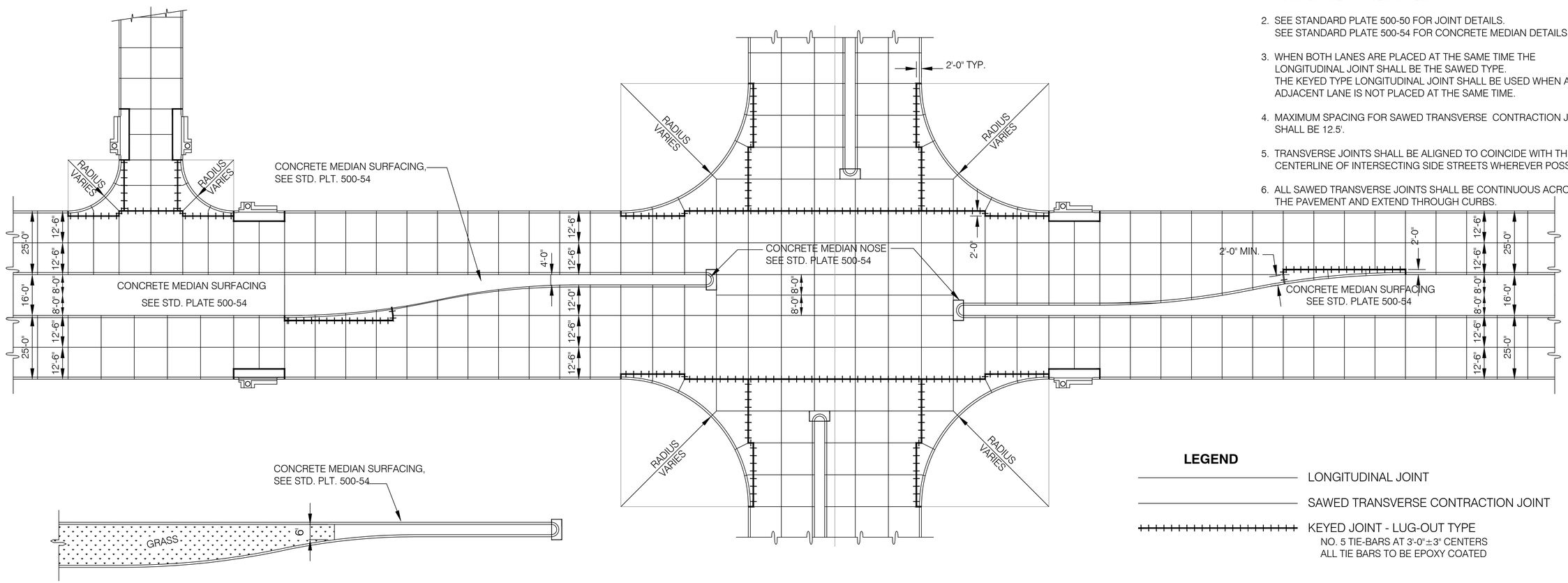

GRASS MEDIAN PLAN

LEGEND

- LONGITUDINAL JOINT
- SAWED TRANSVERSE CONTRACTION JOINT
- KEYED JOINT - LUG-OUT TYPE
  NO. 5 TIE-BARS AT 3'-0"±3" CENTERS
  ALL TIE BARS TO BE EPOXY COATED

	DESIGN ENGINEER	CITY OF OMAHA PUBLIC WORKS DEPARTMENT	
	CITY ENGINEER	66'-0".... 4 LANE DIVIDED CONCRETE PAVEMENT	STANDARD PLATE 500-40 SHEET 1/1
			ISSUE DATE: ..... DECEMBER 10, 2013

L:\Engineering\01\10\DOCUMENTS\Standard Plates\ACAD Files from City\REVISED PLATE NUMERS\PLT-500-40.dwg, 3/20/2014 1:35:55 PM, rickk, 1:1.03774, Lamp, Ryneerson & Associates

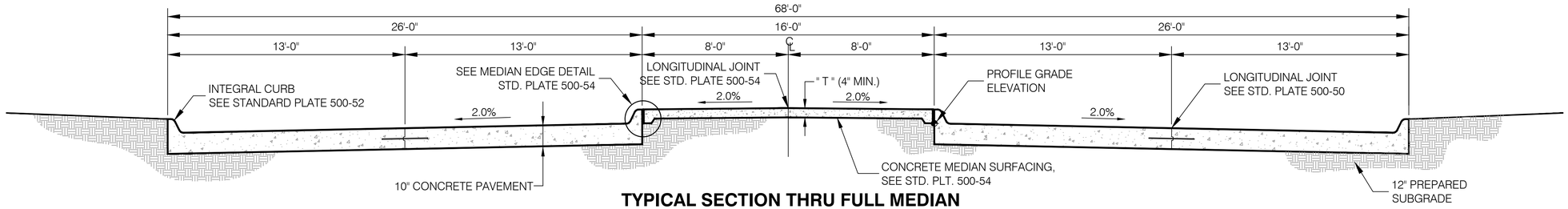

TYPICAL SECTION THRU FULL MEDIAN
68'-0" - 4 LANE DIVIDED CONCRETE PAVEMENT

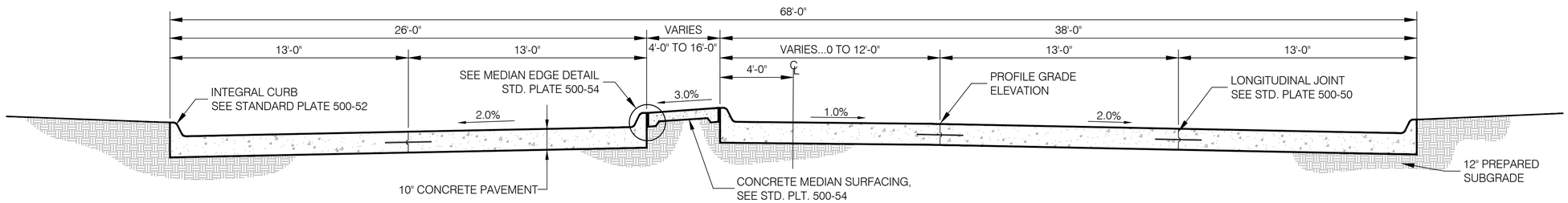

SECTION THRU LEFT TURN LANE

NOTES

1. CONSTRUCT CONCRETE PAVEMENT IN ACCORDANCE WITH SECTION 500 OF THE STANDARD SPECIFICATIONS. PREPARE SUBGRADE IN ACCORDANCE WITH SECTION 200.
2. SEE STANDARD PLATE 500-50 FOR JOINT DETAILS.
   SEE STANDARD PLATE 500-54 FOR CONCRETE MEDIAN DETAILS.
3. WHEN BOTH LANES ARE PLACED AT THE SAME TIME THE LONGITUDINAL JOINT SHALL BE THE SAWED TYPE.
   THE KEYED TYPE LONGITUDINAL JOINT SHALL BE USED WHEN AN ADJACENT LANE IS NOT PLACED AT THE SAME TIME.
4. MAXIMUM SPACING FOR SAWED TRANSVERSE CONTRACTION JOINTS SHALL BE 12.5'.
5. TRANSVERSE JOINTS SHALL BE ALIGNED TO COINCIDE WITH THE CENTERLINE OF INTERSECTING SIDE STREETS WHEREVER POSSIBLE.
6. ALL SAWED TRANSVERSE JOINTS SHALL BE CONTINUOUS ACROSS THE PAVEMENT AND EXTEND THROUGH CURBS.

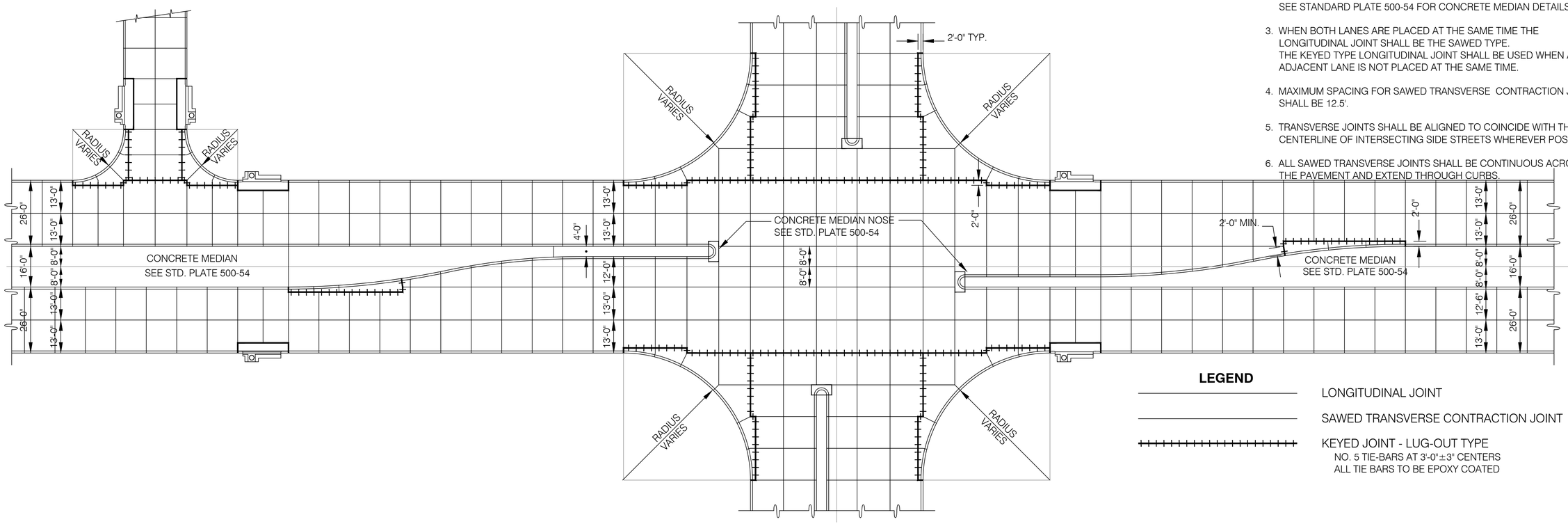

LEGEND

- LONGITUDINAL JOINT
- SAWED TRANSVERSE CONTRACTION JOINT
- KEYED JOINT - LUG-OUT TYPE
  NO. 5 TIE-BARS AT 3'-0"±3" CENTERS
  ALL TIE BARS TO BE EPOXY COATED

	DESIGN ENGINEER	CITY OF OMAHA PUBLIC WORKS DEPARTMENT	
	CITY ENGINEER	68'-0".... 4 LANE DIVIDED CONCRETE PAVEMENT	STANDARD PLATE 500-42 SHEET 1/1
			ISSUE DATE: ..... DECEMBER 10, 2013

L:\Engineering\01\01\DOCUMENTS\Standard Plates\ACAD Files from City\REVISED PLATE NUMERS\PLT-500-42.dwg, 3/20/2014 1:36:50 PM, rickk, 1:1.03774, Lamp, Rynearson & Associates

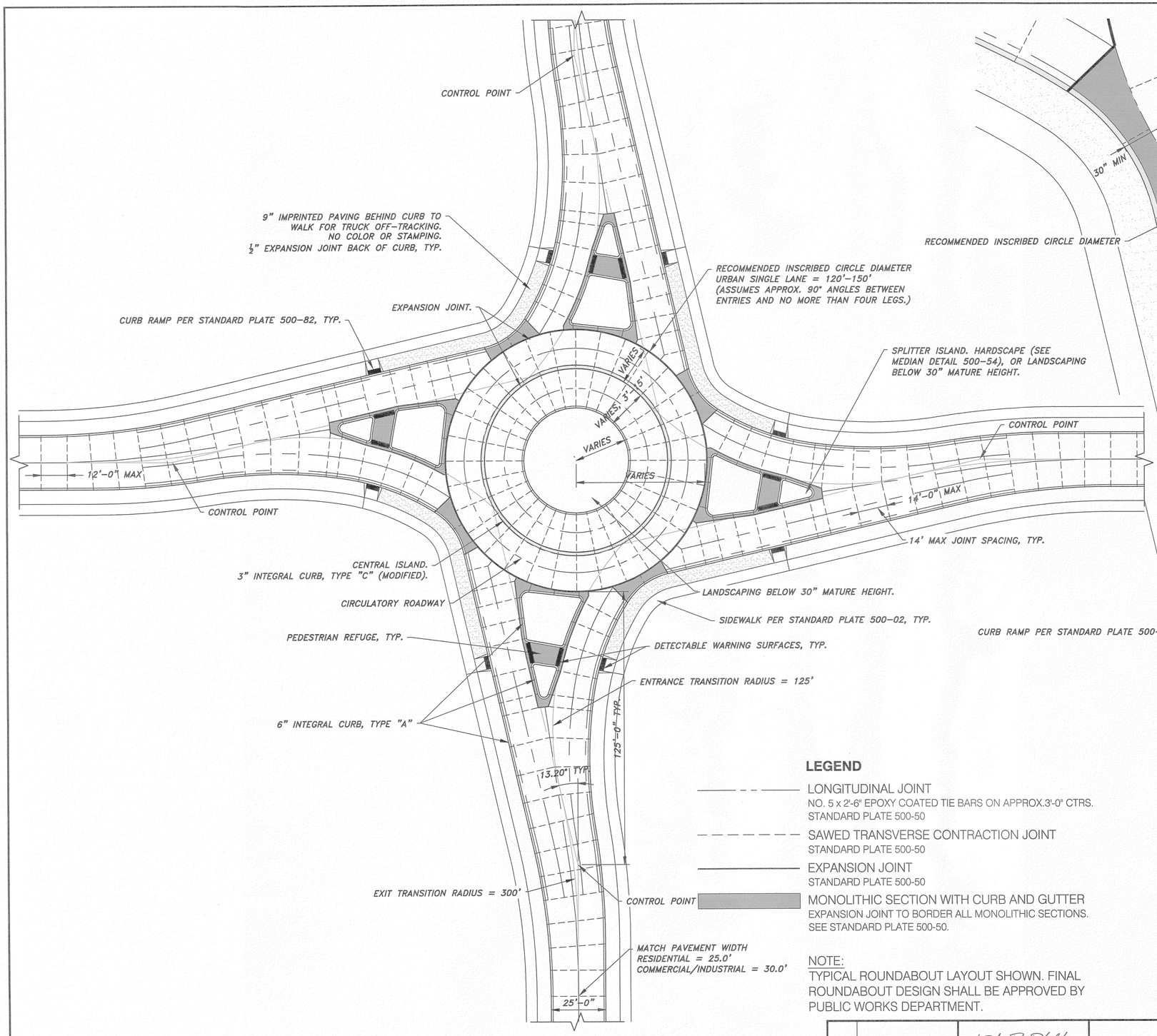

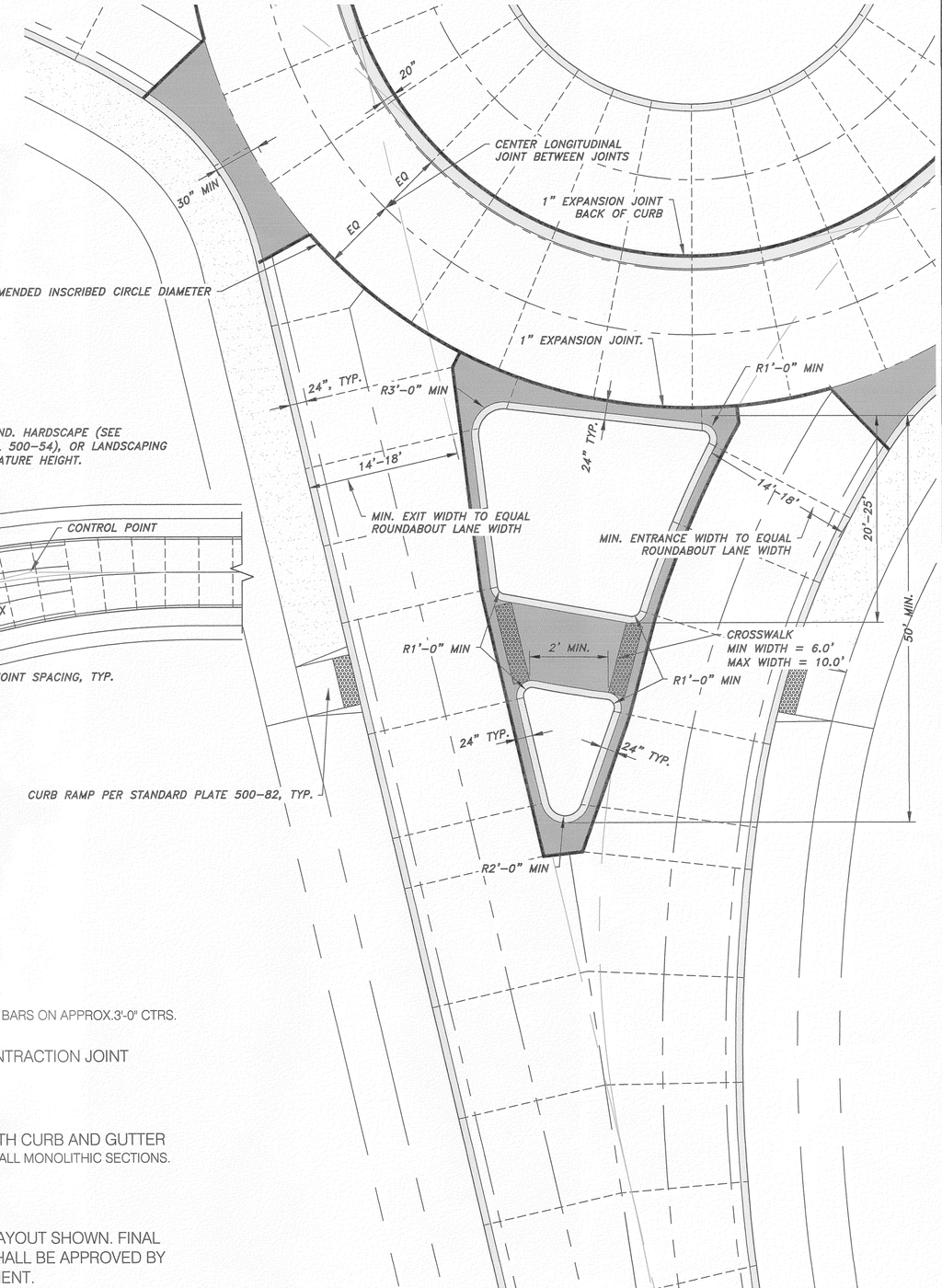

LEGEND

- LONGITUDINAL JOINT
  NO. 5 x 2'-6" EPOXY COATED TIE BARS ON APPROX.3'-0" CTRS.
  STANDARD PLATE 500-50
- SAWED TRANSVERSE CONTRACTION JOINT
  STANDARD PLATE 500-50
- EXPANSION JOINT
  STANDARD PLATE 500-50
- MONOLITHIC SECTION WITH CURB AND GUTTER
  EXPANSION JOINT TO BORDER ALL MONOLITHIC SECTIONS.
  SEE STANDARD PLATE 500-50.

NOTE:
TYPICAL ROUNDABOUT LAYOUT SHOWN. FINAL ROUNDABOUT DESIGN SHALL BE APPROVED BY PUBLIC WORKS DEPARTMENT.

		DESIGN ENGINEER CITY ENGINEER	CITY OF OMAHA PUBLIC WORKS DEPARTMENT **TYPICAL URBAN SINGLE LANE ROUNDABOUT** STANDARD PLATE **500-46** SHEET 1/2 ISSUE DATE: ..... AUGUST 2015

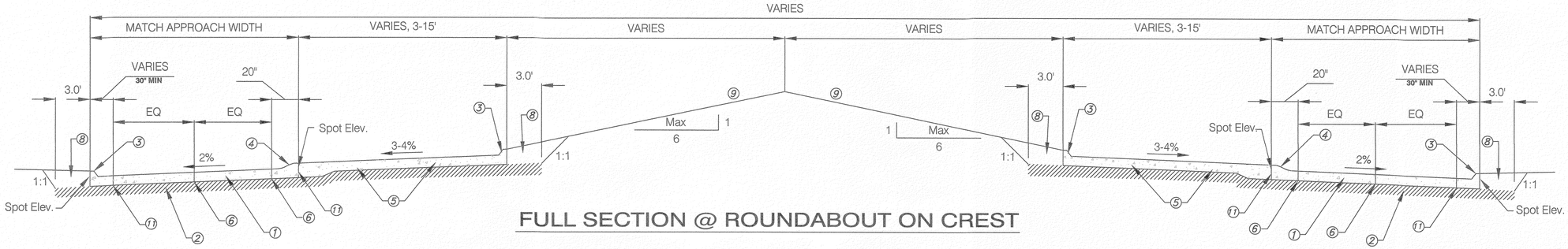

FULL SECTION @ ROUNDABOUT ON CREST

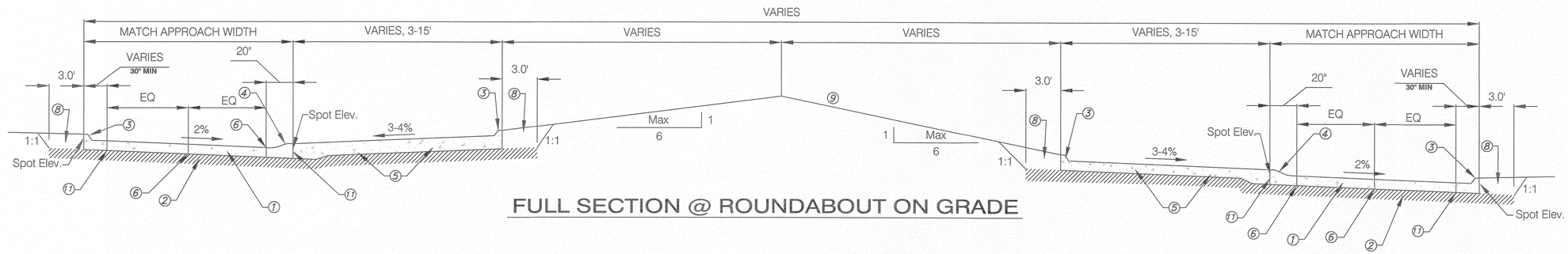

FULL SECTION @ ROUNDABOUT ON GRADE

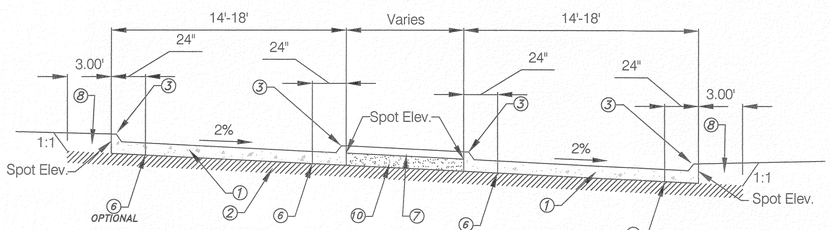

SECTION @ MEDIAN

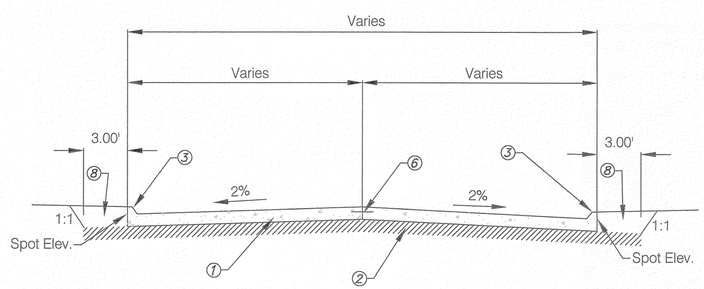

SECTION @ TRANSITION

1. CONCRETE PAVEMENT TO MATCH INTERSECTING ROADWAY THICKNESS
   TYPE L65
   RESIDENTIAL = 9"
   COMMERCIAL/INDUSTRIAL = 10"
2. SUBGRADE PREPARATION
3. 6" INTEGRAL CURB TYPE "A"
4. 3" INTEGRAL CURB TYPE "C" (MODIFIED)
5. CONCRETE TYPE L65, IMPRINTED SURFACING TO MATCH ROADWAY THICKNESS. SEE STANDARD PLATE 500-54. NO STAMPED IMPRINTING.
   RESIDENTIAL = 9"
   COMMERCIAL/INDUSTRIAL = 10"
6. LONGITUDINAL JOINT
7. 9" CONCRETE TYPE L65 IMPRINTED MEDIAN SURFACING SEE MEDIAN DETAIL 500-54, TYP. NO COLOR.
8. EARTH SHOULDER CONSTRUCTION
9. LANDSCAPED ISLAND. LANDSCAPING TO BE BELOW 30" MATURE HEIGHT.
10. SEE STANDARD PLATE 500-54
11. 1" EXPANSION JOINT

NOTES

1. CONSTRUCT CONCRETE PAVEMENT IN ACCORDANCE WITH DIVISION 600 OF THE STANDARD SPECIFICATIONS. PREPARE SUBGRADE IN ACCORDANCE WITH DIVISION 200.
2. SEE STANDARD PLATE 500-50 FOR JOINT DETAILS.
3. WHEN BOTH LANES ARE PLACED AT THE SAME TIME THE LONGITUDINAL JOINT SHALL BE THE SAWED TYPE. THE KEYED TYPE LONGITUDINAL JOINT SHALL BE USED WHEN AN ADJACENT LANE IS NOT PLACED AT THE SAME TIME.
4. MAXIMUM SPACING FOR SAWED TRANSVERSE CONTRACTION JOINTS SHALL BE 14'.
5. ALL SAWED TRANSVERSE JOINTS SHALL BE CONTINUOUS ACROSS THE PAVEMENT AND EXTEND THROUGH CURBS.
6. FOR DESIGN AND CAPACITY INFORMATION REFER TO THE FHWA PUBLICATION NO. FHWA-RD-00-67 "ROUNDABOUTS: AN INFORMATIONAL GUIDE". ALIGNMENT OFFSET LEFT METHOD IS THE PREFERRED AND RADIAL ALIGNMENT METHOD IS ACCEPTABLE.
7. JOINTING PLAN SHALL BE APPROVED BY THE PUBLIC WORKS DEPARTMENT.
8. VERTICAL PROFILE FOR ROADWAY GRADES THROUGH THE ROUNDABOUT AND APPROACHES SHALL NOT EXCEED 4% UNLESS APPROVED BY THE PUBLIC WORKS DEPARTMENT.
9. SIGNING AND STRIPING TO BE ACCORDING TO MUTCD STANDARDS.

		DESIGN ENGINEER CITY ENGINEER	CITY OF OMAHA PUBLIC WORKS DEPARTMENT **TYPICAL URBAN SINGLE LANE ROUNDABOUT** STANDARD PLATE **500-46** SHEET 2/2 ISSUE DATE: ..... AUGUST 2015

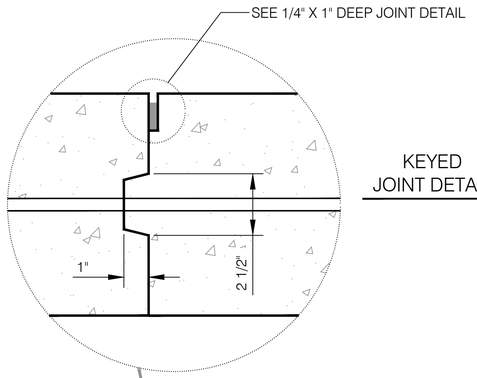

KEYED
JOINT DETAIL

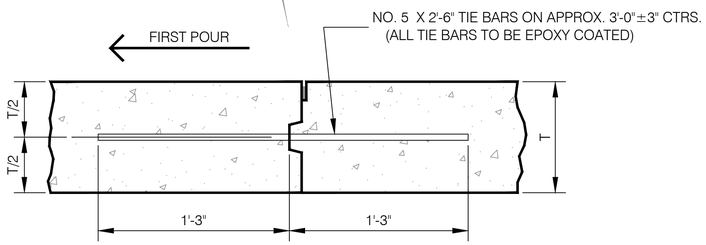

KEYED JOINT
LONGITUDINAL AND LUG-OUT TYPES

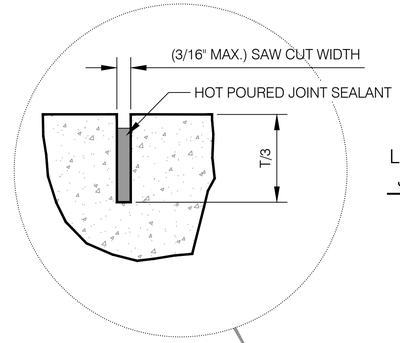

LONGITUDINAL
JOINT DETAIL

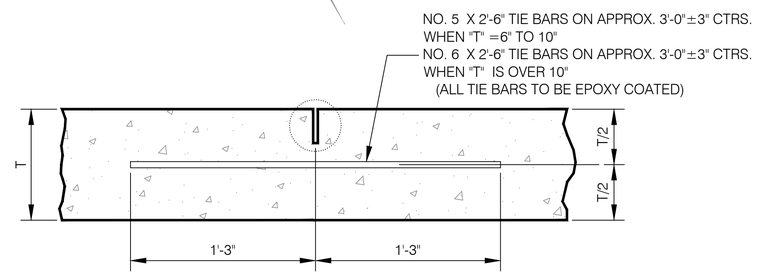

SAWED LONGITUDINAL JOINT

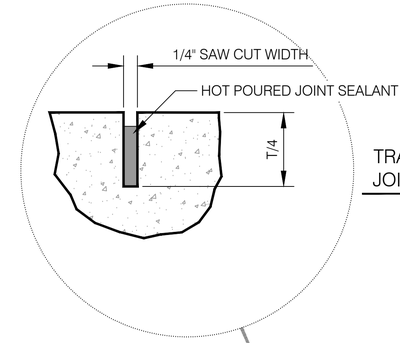

TRANSVERSE
JOINT DETAIL

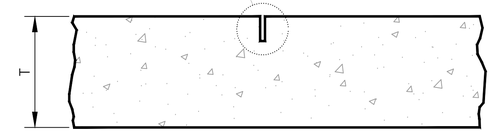

SAWED TRANSVERSE CONTRACTION JOINT

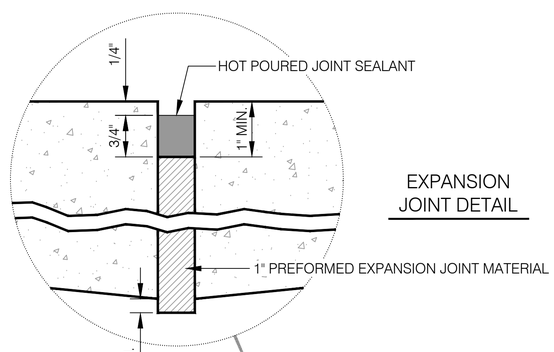

EXPANSION
JOINT DETAIL

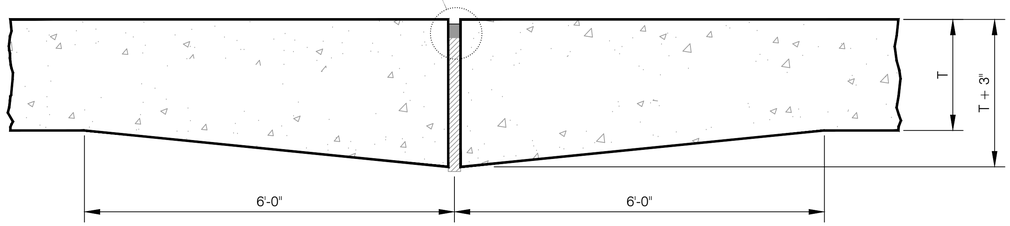

EXPANSION JOINT

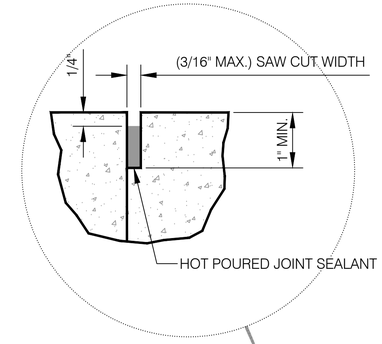

1/4" X 1" DEEP
JOINT DETAIL

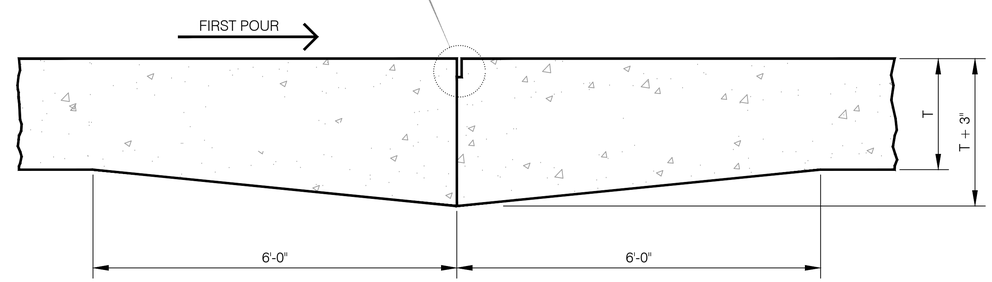

TRANSVERSE CONSTRUCTION JOINT

NOTES

1. CONSTRUCT CONCRETE PAVEMENT IN ACCORDANCE WITH SECTION 500 OF THE STANDARD SPECIFICATIONS. PREPARE SUBGRADE IN ACCORDANCE WITH SECTION 200.
2. WHEN TWO ADJACENT LANES ARE PLACED AT THE SAME TIME THE LONGITUDINAL JOINT COMMON TO BOTH SHALL BE THE SAWED TYPE. THE KEYED TYPE LONGITUDINAL JOINT SHALL BE USED WHEN AN ADJACENT LANE IS NOT PLACED AT THE SAME TIME.
3. ALL EXPANSION JOINT MATERIAL AND SAWED TRANSVERSE JOINTS SHALL BE CONTINUOUS ACROSS THE PAVEMENT AND EXTEND THROUGH CURBS.
4. REINFORCING SHALL BE PLACED WITH A TOLERANCE OF -1/4" AND +1/2" ON CLEARANCE.

DESIGN ENGINEER	CITY OF OMAHA PUBLIC WORKS DEPARTMENT	
CITY ENGINEER	CONCRETE PAVEMENT JOINTS	STANDARD PLATE **500-50** SHEET 1/1
		ISSUE DATE: ..... DECEMBER 10, 2013

L:\Engineering\0110102\DOCUMENTS\Standard Plates\ACAD Files from City\REVISED PLATE NUMERS\PLT-500-50.dwg, 3/6/2014 2:14:00 PM, rckk, 1:1.0241, Lamp, Rynearson & Associates

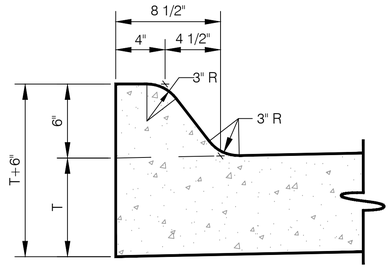

TYPE "A" INTEGRAL CURB

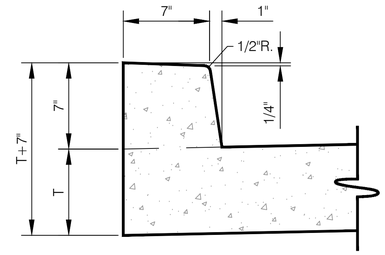

TYPE "B" INTEGRAL CURB

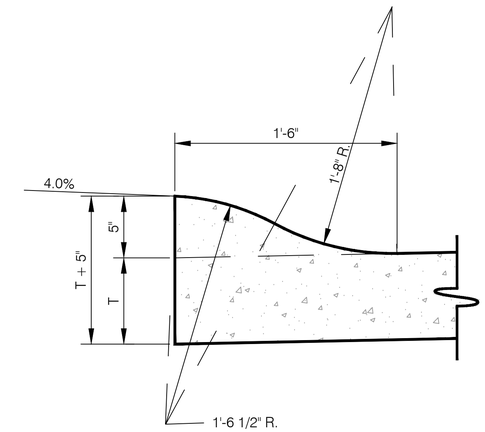

TYPE "C" INTEGRAL CURB

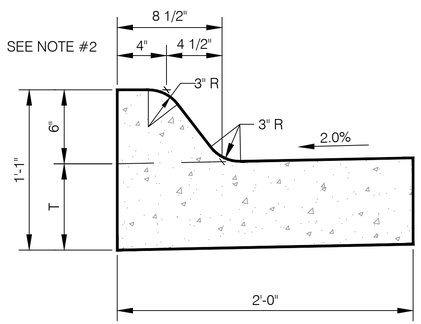

COMBINATION CURB AND GUTTER TYPICAL

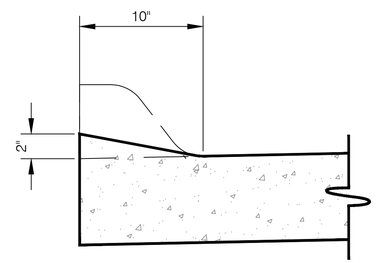

DRIVEWAY LIP CURB

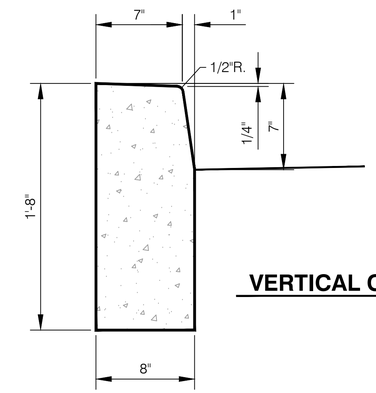

VERTICAL CURB

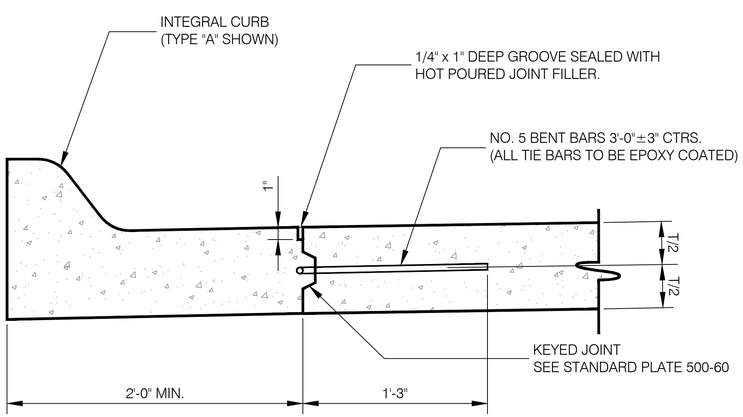

COMBINATION CURB AND GUTTER

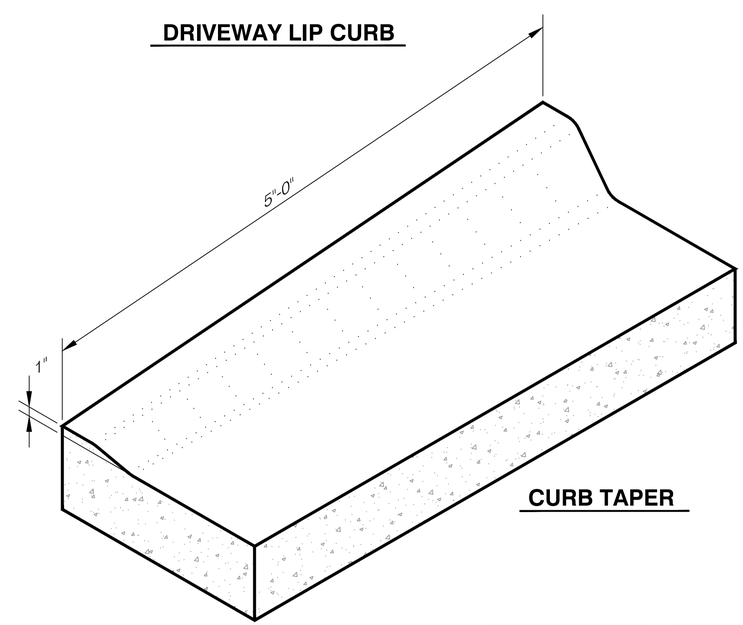

CURB TAPER

NOTES

1. INTEGRAL CURB AND COMBINATION CURB AND GUTTER CONSTRUCTION SHALL CONFORM TO SECTION 500 OF THE STANDARD SPECIFICATIONS. PREPARE SUBGRADE IN ACCORDANCE WITH SECTION 200.
2. CURB TYPE COULD BE TYPE A, TYPE B, TYPE C OR DRIVEWAY LIP.
3. AT A MINIMUM CONCRETE SHALL BE TYPE L65, UNLESS OTHERWISE INDICATED IN THE CONTRACT DOCUMENTS.

DESIGN ENGINEER	CITY OF OMAHA PUBLIC WORKS DEPARTMENT	
	CONCRETE CURBS	STANDARD PLATE **500-52** SHEET 1/1
CITY ENGINEER		ISSUE DATE: ..... DECEMBER 10, 2013

L:\Engineering\011010\DOCUMENTS\Standard Plates\CAD Files from City\REVISED PLATE NUMERS\PLT-500-52.dwg, 2/17/2014 10:41:51 AM, rdsk, 1:1.0241, Lamp, Rynearson & Associates

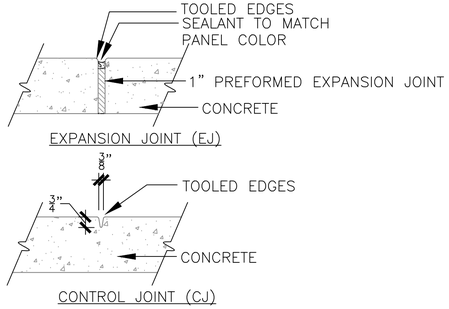

JOINTS (TYP)

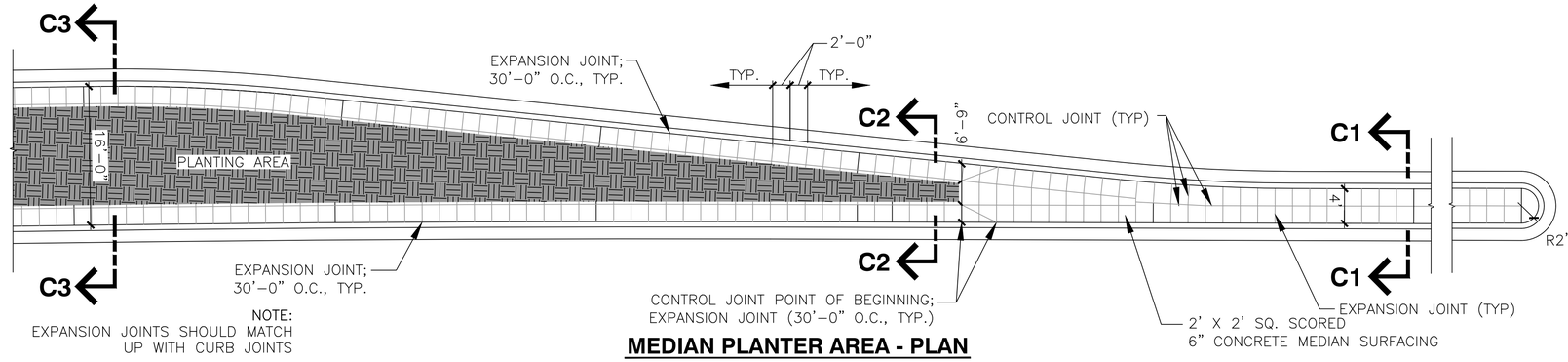

NOTE:
EXPANSION JOINTS SHOULD MATCH UP WITH CURB JOINTS

MEDIAN PLANTER AREA - PLAN

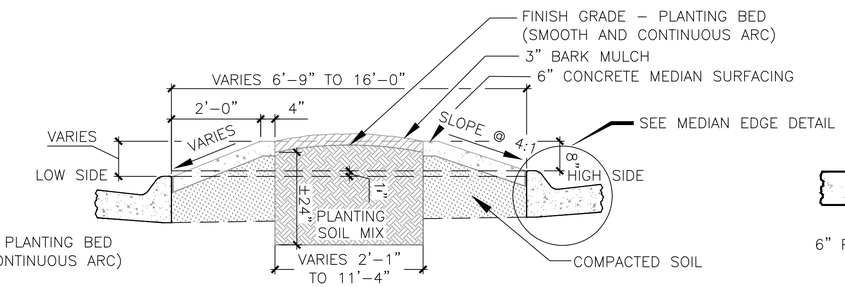

SECTION C2-C2 (MEDIAN TRANSITION)

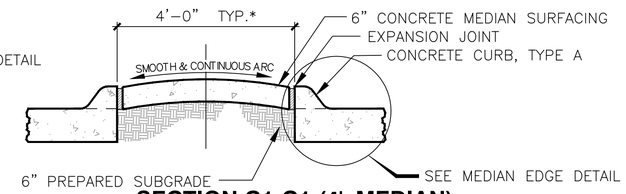

SECTION C1-C1 (4' MEDIAN)

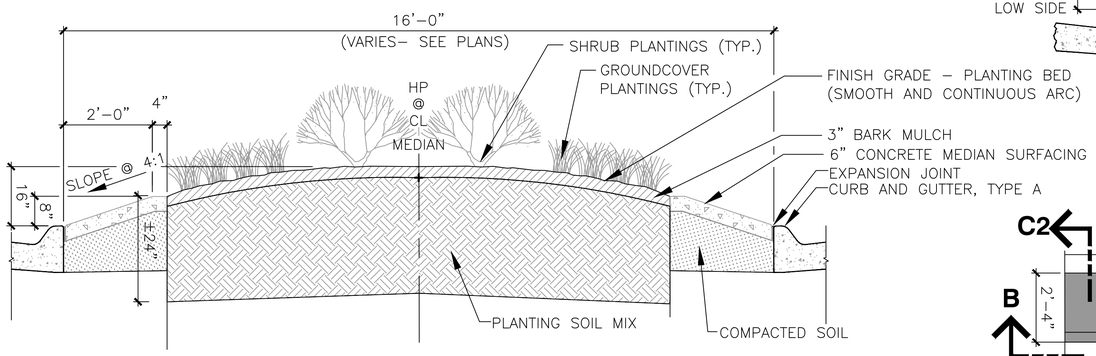

SECTION C3-C3 16' (MEDIAN TRANSITION)

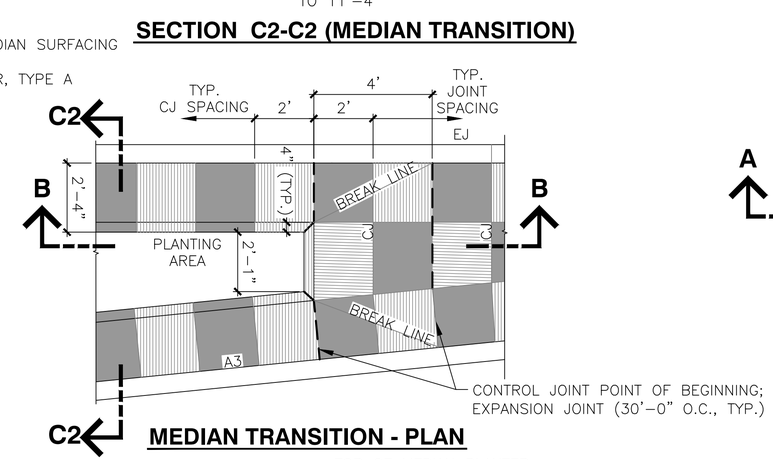

MEDIAN TRANSITION - PLAN

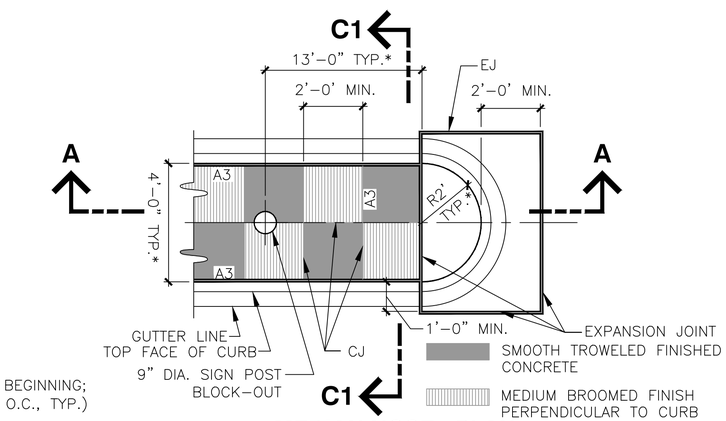

MEDIAN NOSE - PLAN

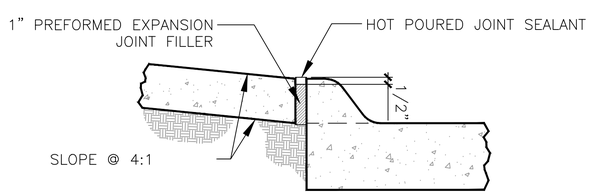

MEDIAN EDGE DETAIL

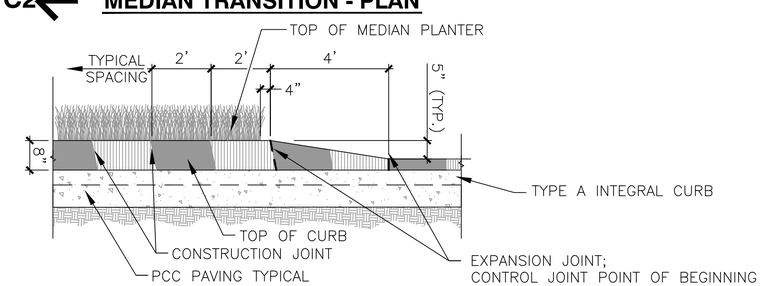

SECTION B-B (MEDIAN TRANSITION - ELEVATION)

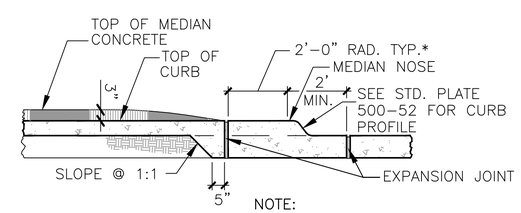

NOTE:
EXPANSION JOINTS SHOULD MATCH UP WITH PAVEMENT JOINTS

SECTION A-A (MEDIAN NOSE - ELEVATION)

NOTES

1. CONCRETE MEDIAN SURFACING AND MEDIAN NOSE SHALL BE CONSTRUCTED IN CONFORMANCE WITH SECTION 500 OF THE STANDARD SPECIFICATIONS AND SPECIAL PROVISIONS. PREPARE SUBGRADE IN ACCORDANCE WITH SECTION 200.
2. CONCRETE MEDIAN SURFACING SHALL BE TEXTURED WITH A PATTERN AS NOTED IN THIS PLAN. AT A MINIMUM CONCRETE SHALL BE L65.
3. THICKNESS " T " OF CONCRETE MEDIAN SURFACING SHALL BE 6" UNLESS OTHERWISE SPECIFIED IN THE PLANS.
4. ALL CONTROL JOINTS SHALL BE CONSTRUCTED IN ALL MEDIANS AS SHOWN ON THIS PLAN. JOINT DEPTH SHALL BE 3/4".
5. 1" PREFORMED EXPANSION JOINT MATERIAL SHALL BE PLACED TRANSVERSELY THROUGH MEDIAN AT 30' MAXIMUM INTERVALS. PREFORMED JOINT MATERIAL SHALL CONFORM TO SECTION 500 OF THE STANDARD SPECIFICATIONS.
6. ALL PREFORMED EXPANSION JOINTS SHALL BE SEALED WITH HOT POURED JOINT SEALANT CONFORMING TO SECTION 500 OF THE STANDARD SPECIFICATIONS.
7. TRANSVERSE AND LONGITUDINAL CONTROL JOINTS SHALL NOT BE FILLED.

L:\Engineering\2013\02\DOCUMENTS\Standard Plates\ACAD Files from City\REVISED PLATE NUMERS\PLT-500-54 (1).dwg, 3/6/2014 1:33:45 PM, rickk, 1:1.0241, Lump, Rynearson & Associates

		DESIGN ENGINEER	CITY OF OMAHA — PUBLIC WORKS DEPARTMENT
		CITY ENGINEER	CONCRETE MEDIANS

STANDARD PLATE **500-54** — SHEET 1/2

ISSUE DATE: ..... DECEMBER 10, 2013

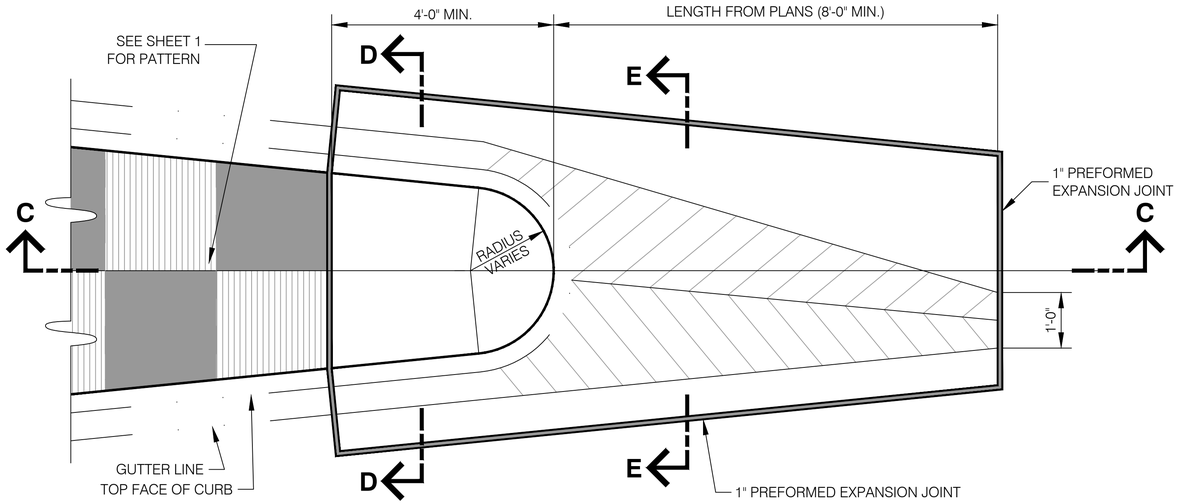

CONCRETE MEDIAN SAFETY NOSE PLAN

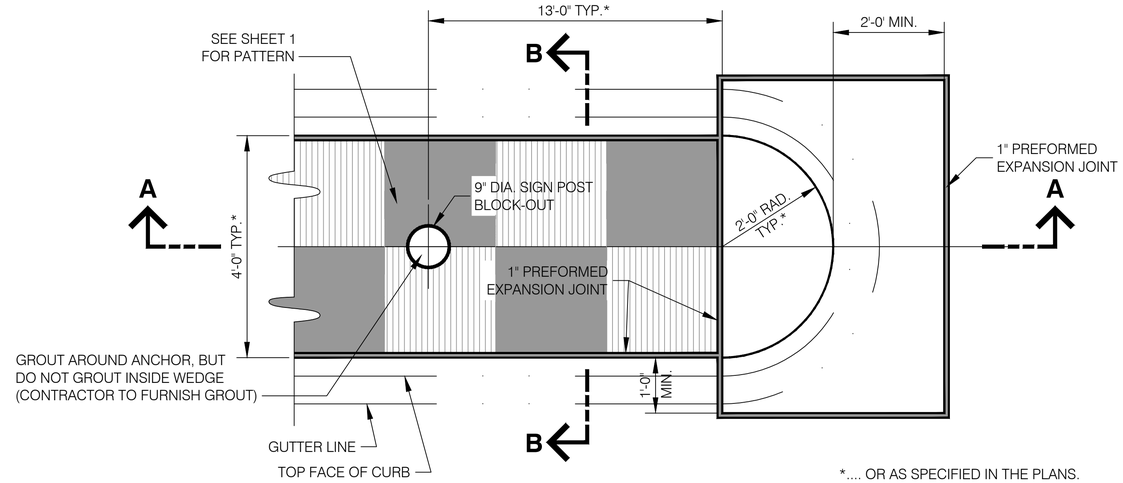

*.... OR AS SPECIFIED IN THE PLANS.

CONCRETE MEDIAN NOSE PLAN

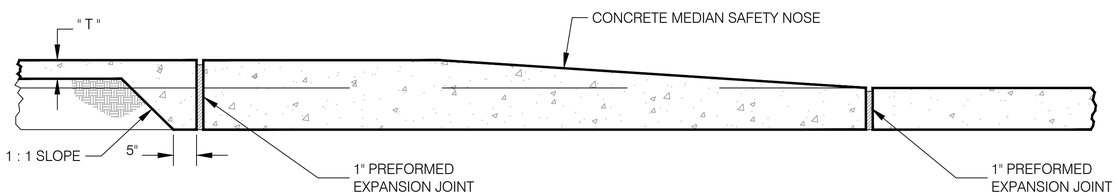

SECTION C - C

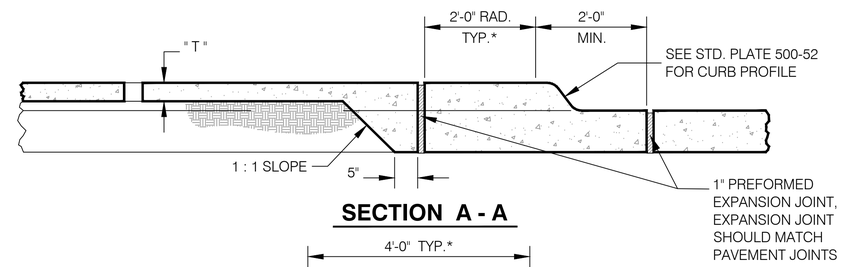

SECTION A - A

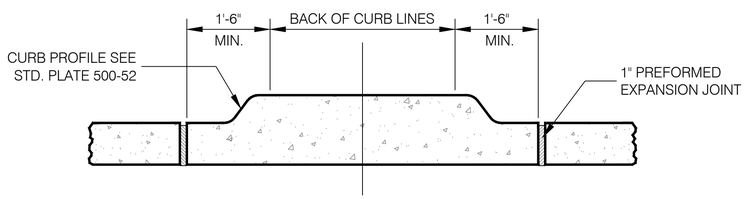

SECTION D- D

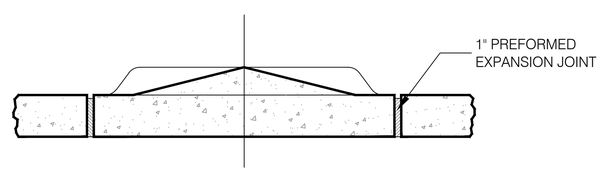

SECTION E- E

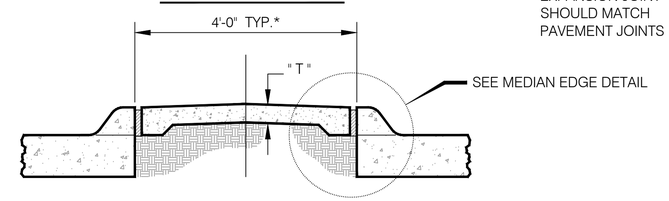

SECTION B- B

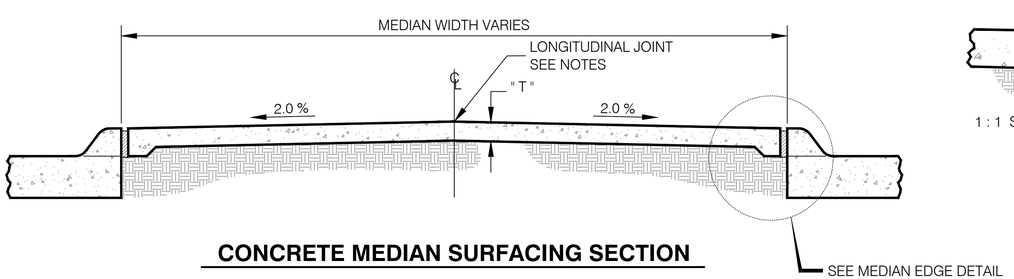

CONCRETE MEDIAN SURFACING SECTION

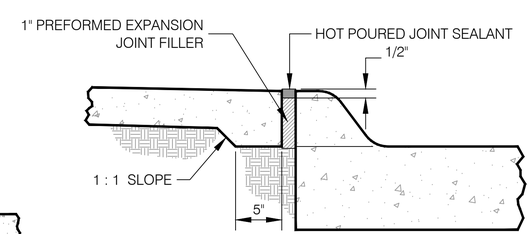

MEDIAN EDGE DETAIL

NOTES

1. CONCRETE MEDIAN SURFACING AND MEDIAN NOSE SHALL BE CONSTRUCTED IN CONFORMANCE WITH SECTION 500 OF THE STANDARD SPECIFICATIONS. PREPARE SUBGRADE IN ACCORDANCE WITH SECTION 200.
2. CONCRETE MEDIAN SURFACING SHALL BE TEXTURED WITH A PATTERN AS NOTED IN THIS PLAN. AT A MINIMUM CONCRETE SHALL BE L65.
3. THICKNESS " T " OF CONCRETE MEDIAN SURFACING SHALL BE 4" UNLESS OTHERWISE SPECIFIED IN THE PLANS.
4. A LONGITUDINAL CONTRACTION JOINT SHALL BE CONSTRUCTED IN ALL MEDIANS GREATER THAN 8'-0" IN WIDTH. JOINT DEPTH SHALL BE 1/4 "T".
   TRANSVERSE CONTRACTION JOINTS SHALL BE CONSTRUCTED IN ALL MEDIANS AT 8'-0" MAXIMUM INTERVALS. JOINT DEPTH SHALL BE 1/4 "T".
5. 1" PREFORMED EXPANSION JOINT MATERIAL SHALL BE PLACED TRANSVERSELY THROUGH MEDIAN AT 50' MAXIMUM INTERVALS. PREFORMED JOINT MATERIAL SHALL CONFORM TO SECTION 500 OF THE STANDARD SPECIFICATIONS.
6. ALL PREFORMED EXPANSION JOINTS SHALL BE SEALED WITH HOT POURED JOINT SEALANT CONFORMING TO SECTION 500 OF THE STANDARD SPECIFICATIONS.
7. TRANSVERSE AND LONGITUDINAL CONTRACTION JOINTS SHALL NOT BE FILLED.

		DESIGN ENGINEER	CITY OF OMAHA PUBLIC WORKS DEPARTMENT
		CITY ENGINEER	CONCRETE MEDIANS

STANDARD PLATE **500-54** SHEET 2/2

ISSUE DATE: ..... DECEMBER 10, 2013

L:\Engineering\01101020\DOCUMENTS\Standard Plates\ACAD Files from City\REVISED PLATE NUMERS\PLT-500-54 (2).dwg, 2/17/2014 11:46:58 AM, rdsk, 1:1.0241, Lamp, Rynearson & Associates

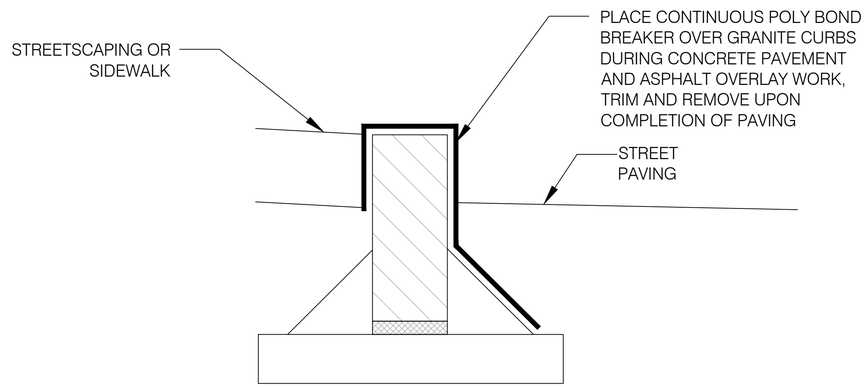

CURB PROTECTION DETAIL
NO SCALE

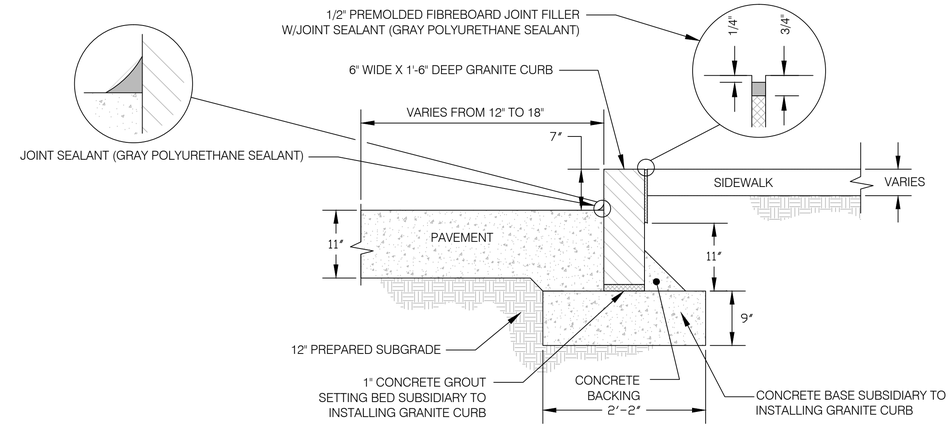

GRANITE CURB DETAIL (6" WIDE CURB)
NO SCALE

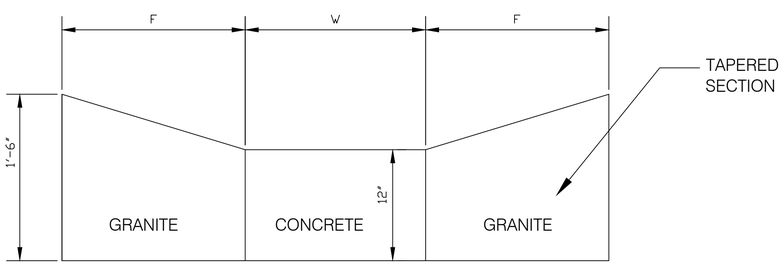

10' OR 20' RADIUS CURB (CBD)

	W	F
CBD	8'-6"	5'-0"
TYP. W/CURBWALK	5'-0"	5'-0"
TYP. WITH GRASS OR STAMP	5'-0"	1'-0"

TYPICAL ADA CURB RAMP
NO SCALE

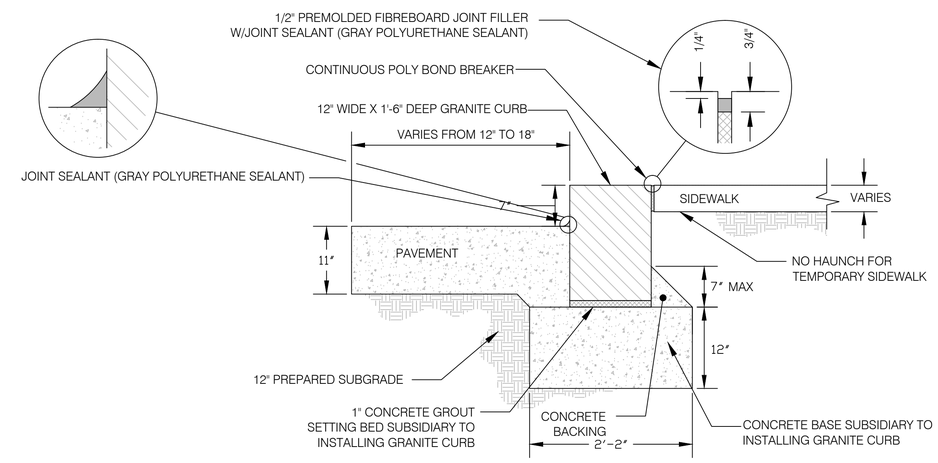

GRANITE CURB DETAIL (12" WIDE CURB)
NO SCALE

L:\Engineering\011010\DOCUMENTS\Standard Plates\ACAD Files from City\REVISED PLATE NUMERS\PLT-500-56.dwg, 3/6/2014 1:41:09 PM, rchk, 1:1.0241, Lamp, Rynearson & Associates

DESIGN ENGINEER	CITY OF OMAHA PUBLIC WORKS DEPARTMENT		
CITY ENGINEER	GRANITE CURBS	STANDARD PLATE 500-56	SHEET 1/1
		ISSUE DATE: ..... DECEMBER 10, 2013	

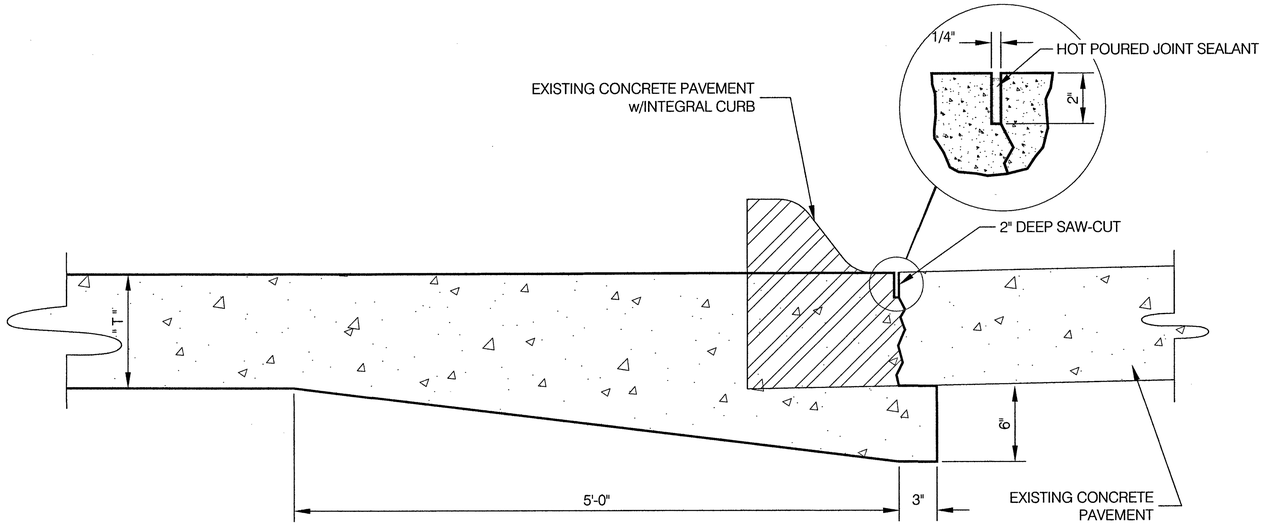

CONCRETE PAVEMENT WIDENING THICKENED EDGE JOINT

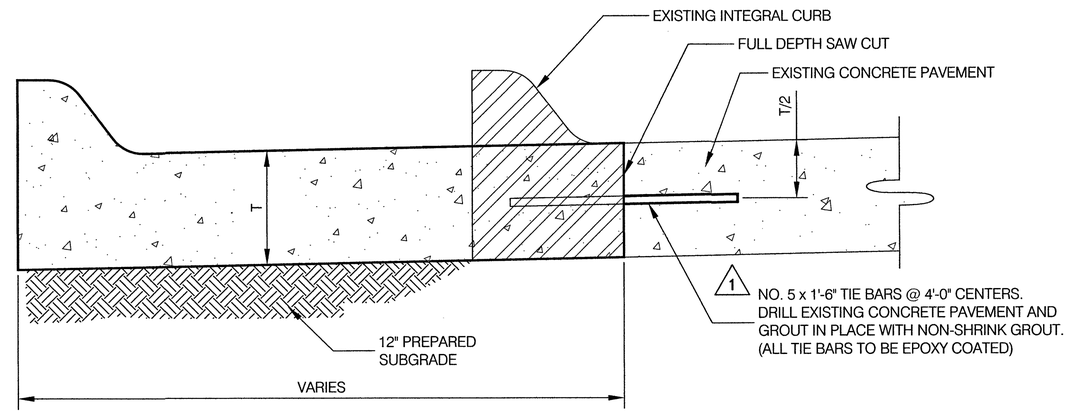

CONCRETE PAVEMENT WIDENING REINFORCED JOINT

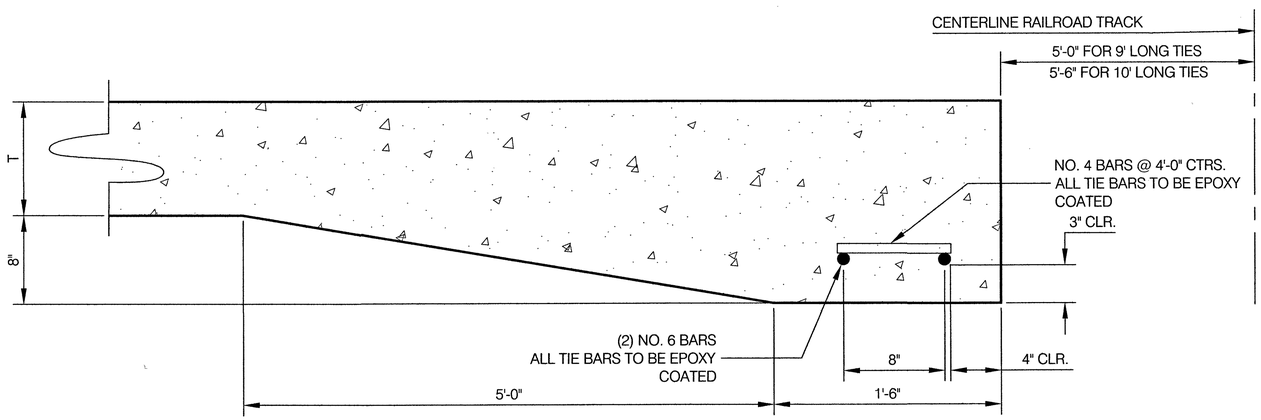

PAVEMENT BEAM AT RAILROAD CROSSING

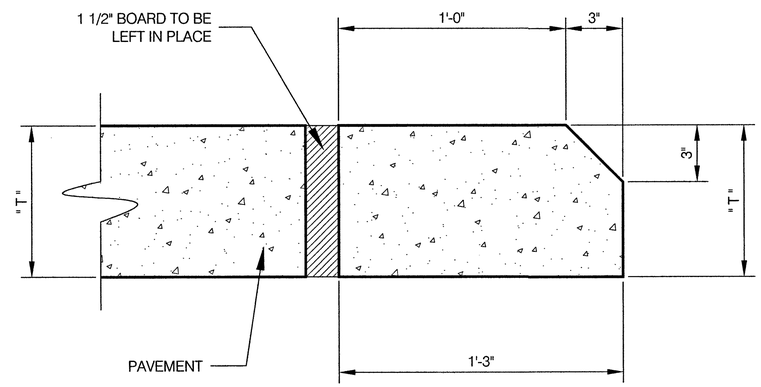

CONCRETE HEADER

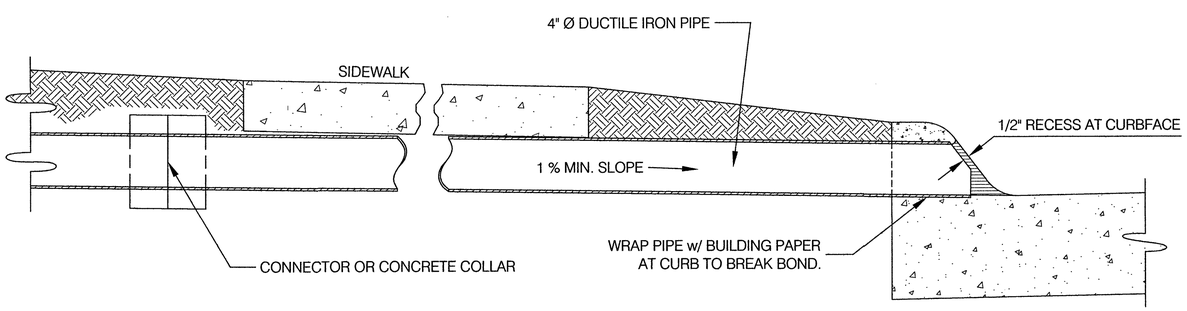

ROOF DRAIN OUTLET AT CURB

NOTES

1. CONSTRUCTION OF CONCRETE PAVEMENT AND APPURTENANCES SHALL BE IN ACCORDANCE WITH SECTION 500 OF THE STANDARD SPECIFICATIONS. PREPARE SUBGRADE IN ACCORDANCE WITH SECTION 200.
2. CONTRACTION JOINTS SHALL BE CONSTRUCTED TO MATCH LOCATIONS OF EXISTING JOINTS.
3. REINFORCING SHALL BE PLACED WITH A TOLERANCE OF -1/4" AND +1/2" ON CLEARANCE.

1	6/3/2015	DESIGN ENGINEER CITY ENGINEER	CITY OF OMAHA PUBLIC WORKS DEPARTMENT CONCRETE PAVEMENT WIDENING AND MISCELLANEOUS	STANDARD PLATE 500-60 ISSUE DATE: ..... DECEMBER 10, 2013 SHEET 1/1

** NOTE:
GRADE BREAK AREA TO ALLOW SIDEWALK PROFILE TO RAISE OR LOWER TO MEET DRIVEWAY ELEVATION. SIDEWALK TO CONNECT INTO DRIVEWAY AT 2% OR LESS PROFILE SLOPE, GRADE BREAK AREA SHALL BE LESS THAN 5% LONGITUDINAL SLOPE AT ALL TIMES. BREAKS IN GRADE CANNOT BE MADE AT DRIVEWAY FLARE OR RADIUS. GRADE BREAK MUST BE PERPENDICULAR TO DIRECTION OF TRAVEL.

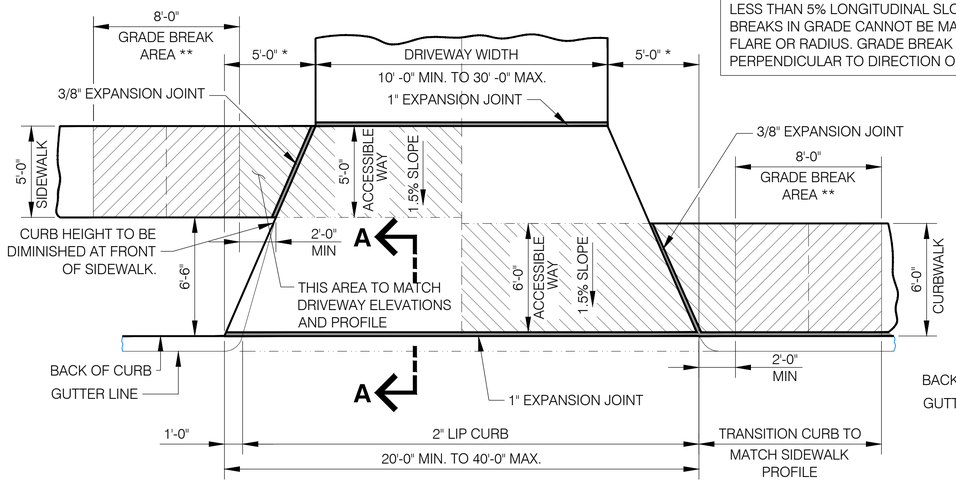

FLARED APPROACH ..... NEW PAVEMENT

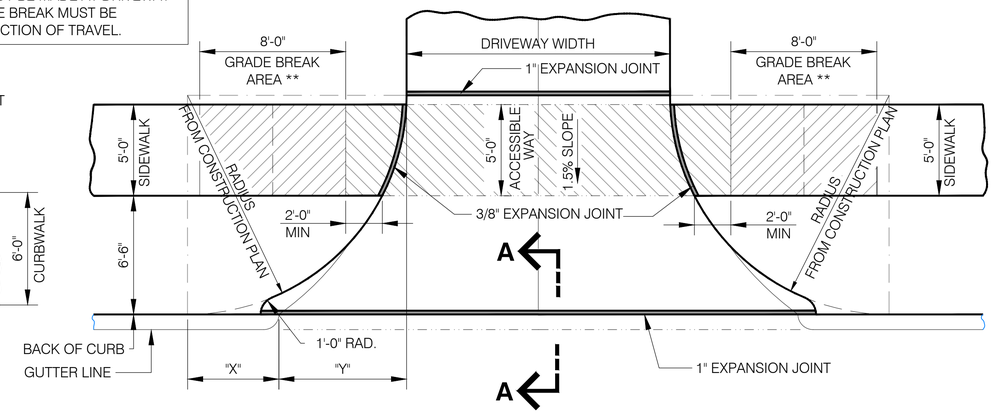

RADIUS APPROACH ..... NEW PAVEMENT

RADIUS	"X"	"Y"
10.0'	4.36'	5.64'
12.5'	4.90'	7.60'
15.0'	5.39'	9.61'
17.5'	5.83'	11.67'
20.0'	6.24'	13.76'
22.5'	6.63'	15.87'
25.0'	7.00'	18.00'
27.5'	7.35'	20.15'
30.0'	7.68'	22.32'
32.5'	8.00'	24.50'
35.0'	8.31'	26.69'
37.5'	8.60'	28.90'
40.0'	8.89'	31.11'

$X = \sqrt{(2R-1)}$
ALL DIMENSIONS IN FEET

* NOTE:
FOR DRIVEWAY WIDTHS 20'-0" OR WIDER FLARE MAY BE REDUCED TO 3'-0" MINIMUM.

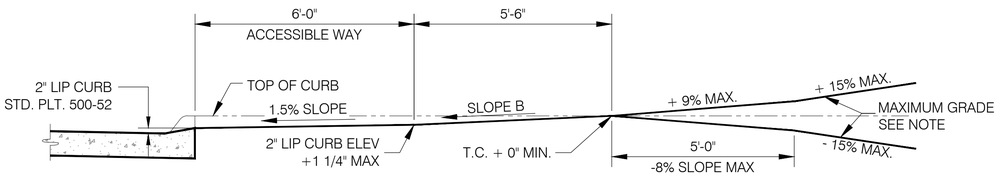

SLOPE B	
5" CURB	2.91% SLOPE, TYP,
6" CURB	4.42% SLOPE, TYP.

DRIVEWAY GRADES FOR 6' CURBWALK

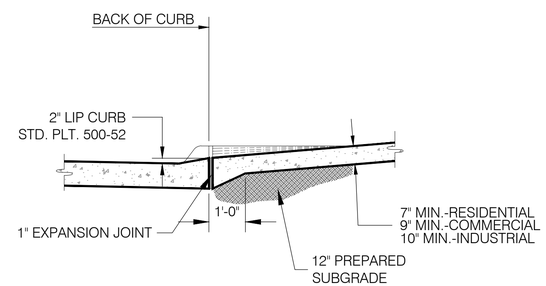

SECTION A-A
(NEW PAVEMENT)

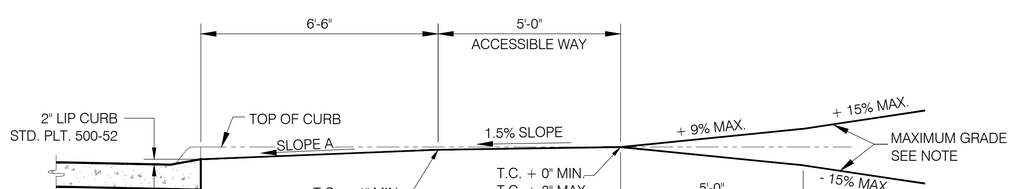

SLOPE A	
5" CURB	2.69% MIN. SLOPE, 6.54% MAX SLOPE
6" CURB	3.97% MIN. SLOPE, 7.80% MAX SLOPE

DRIVEWAY GRADES FOR 5' SIDEWALK W/ 6.5' SETBACK

NOTES

1. CONSTRUCT CONCRETE PAVEMENT IN ACCORDANCE WITH SECTION 500 OF THE STANDARD SPECIFICATIONS. PREPARE SUBGRADE IN ACCORDANCE WITH SECTION 200.
2. DEPTH OF SAW CUT IN EXISTING PAVEMENTS AND CURB SHALL BE 1/4 SLAB THICKNESS OR 2" MINIMUM.
3. THE MAXIMUM GRADE FOR DRIVEWAYS SHALL BE : 15% FOR RESIDENTIAL AND 10% FOR COMMERCIAL. FLATTER GRADES ARE RECOMMENDED.
4. CREST OR SAG IN VERTICAL CURVES SHALL NOT EXCEED A 4" HUMP IN A 10' CHORD.
5. PREFORMED EXPANSION JOINTS SHALL BE SEALED WITH HOT-POURED JOINT SEALANT.
6. ANY PORTION OF A SIDEWALK OR ACCESSIBLE WAY WITHIN THE DRIVEWAY AREA WITH A CONSTRUCTED CROSS SLOPE GREATER THAN 2.0% SHALL BE REMOVED AND REPLACED AT NO COST TO THE CITY OF OMAHA.

DESIGN ENGINEER	CITY OF OMAHA PUBLIC WORKS DEPARTMENT	
	CONCRETE DRIVEWAY	STANDARD PLATE 500-70 — SHEET 1/2
CITY ENGINEER		ISSUE DATE: ..... DECEMBER 10, 2013

L:\Engineering\011010\DOCUMENTS\Standard Plates\ACAD Files from City\REVISED PLATE NUMERS\PLT-500-70.dwg, 2/18/2014 1:30:45 PM, Hdk, 1:1.03774, Lamp, Rynearson & Associates

** NOTE:
GRADE BREAK AREA TO ALLOW SIDEWALK PROFILE TO RAISE OR LOWER TO MEET DRIVEWAY ELEVATION. SIDEWALK TO CONNECT INTO DRIVEWAY AT 2% OR LESS PROFILE SLOPE, GRADE BREAK AREA SHALL BE LESS THAN 5% LONGITUDINAL SLOPE AT ALL TIMES. BREAKS IN GRADE CANNOT BE MADE AT DRIVEWAY FLARE OR RADIUS. GRADE BREAK MUST BE PERPENDICULAR TO DIRECTION OF TRAVEL.

* NOTE:
FOR DRIVEWAY WIDTHS 20'-0" OR WIDER FLARE MAY BE REDUCED TO 3'-0" MINIMUM.

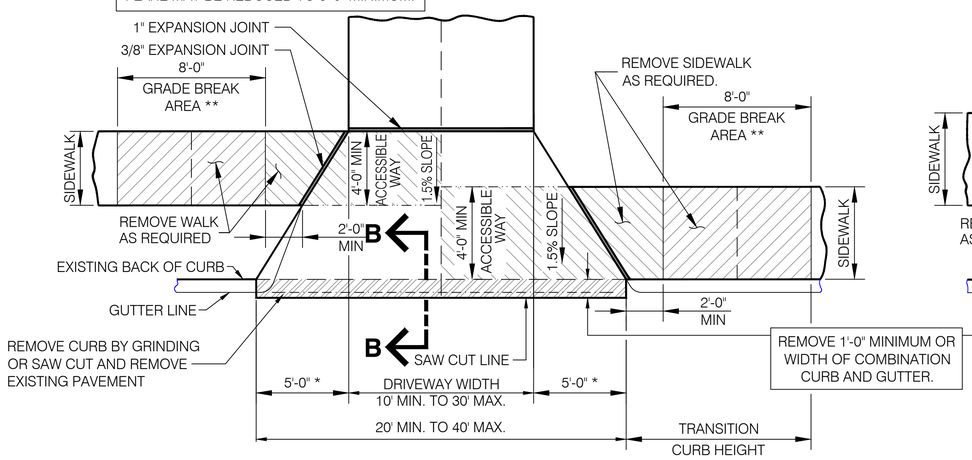

FLARED APPROACH
EXISTING PAVEMENT - CURB CUT DETAILS

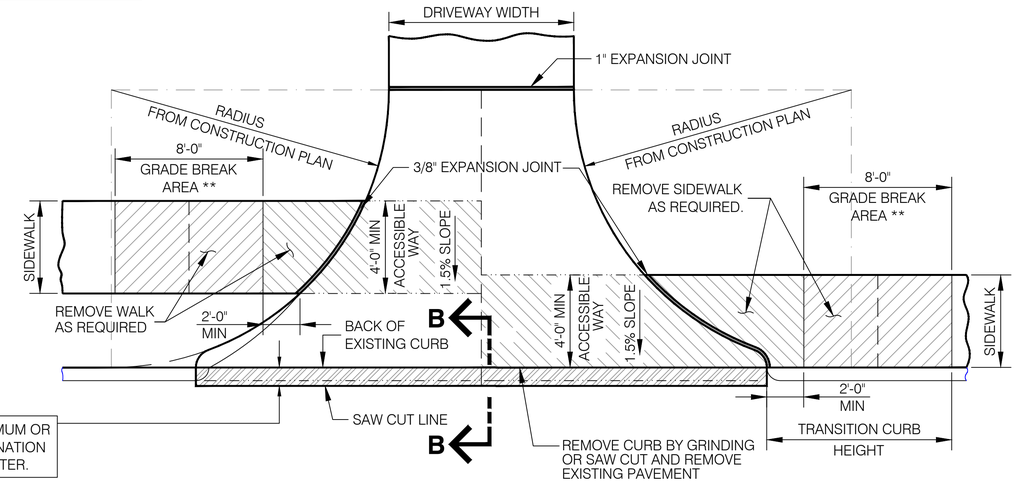

RADIUS APPROACH
EXISTING PAVEMENT - CURB CUT DETAILS

* NOTE:
FOR DRIVEWAY WIDTHS 20'-0" OR WIDER FLARE MAY BE REDUCED TO 3'-0" MINIMUM.

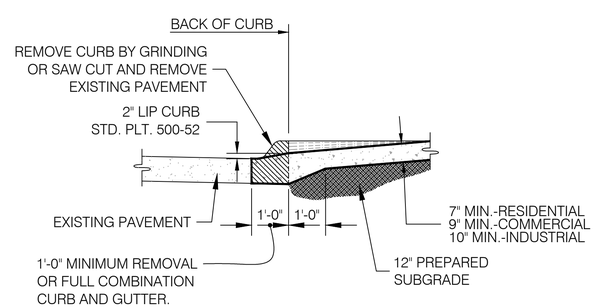

SECTION B-B

NOTES

1. CONSTRUCT CONCRETE PAVEMENT IN ACCORDANCE WITH SECTION 500 OF THE STANDARD SPECIFICATIONS. PREPARE SUBGRADE IN ACCORDANCE WITH SECTION 200.
2. DEPTH OF SAW CUT IN EXISTING PAVEMENTS AND CURB SHALL BE 1/4 SLAB THICKNESS OR 2" MINIMUM.
3. THE MAXIMUM GRADE FOR DRIVEWAYS SHALL BE : 15% FOR RESIDENTIAL AND 10% FOR COMMERCIAL. FLATTER GRADES ARE RECOMMENDED.
4. CREST OR SAG IN VERTICAL CURVES SHALL NOT EXCEED A 4" HUMP IN A 10' CHORD.
5. PREFORMED EXPANSION JOINTS SHALL BE SEALED WITH HOT-POURED JOINT SEALANT.
6. ANY PORTION OF A SIDEWALK OR ACCESSIBLE WAY WITHIN THE DRIVEWAY AREA WITH A CONSTRUCTED CROSS SLOPE GREATER THAN 2.0% SHALL BE REMOVED AND REPLACED AT NO COST TO THE CITY OF OMAHA.

		DESIGN ENGINEER	CITY OF OMAHA PUBLIC WORKS DEPARTMENT
		CITY ENGINEER	CONCRETE DRIVEWAY
			STANDARD PLATE 500-70 SHEET 2/2
			ISSUE DATE: ..... DECEMBER 10, 2013

L:\Engineering\01101\DOCUMENTS\Standard Plates\CAD Files from City\REVISED PLATE NUMERS\PLT-500-70.dwg, 2/17/2014 12:03:09 PM, rdsk, 1:1.0241, Lamp, Rynearson & Associates

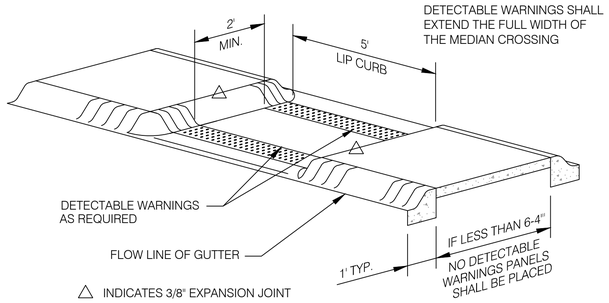

MEDIAN CROSSING DETAIL

NOTE: AREA FROM BACK OF CURB TO BACK OF CURB MEASURED AS RAMP.

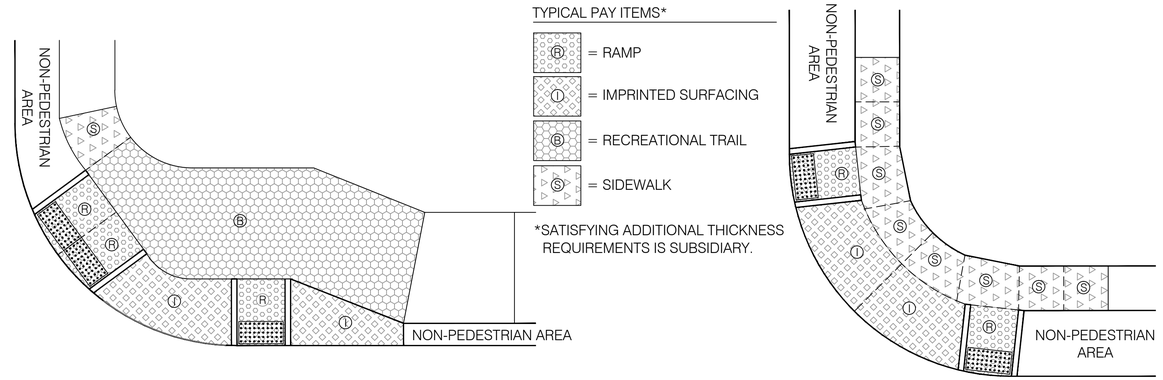

CURB RAMP MEASUREMENT

	RECOMMENDED	MIN/MAX
TRANSITION SLOPE	1:12	1:10 MAX (RELATIVE)**
RAMP SLOPE (NEW)	1:14	1:20 MIN 1:12 MAX
RAMP SLOPE (RETRO-FIT)	1:12	1:12 MAX
RAMP WIDTH	5' SIDEWALK SEE TYPICAL - REC, TRAIL	4' MIN
RAMP LENGTH (NEW)	6'	2.5' MIN 8' MAX
RAMP LENGTH (RETRO-FIT)	6'	8' MAX - 1:12
		5' MAX - 1:10
		2' MAX - 1:8**
		2' MAX - 1:6** (HISTORIC ONLY)
LANDING	5' x 5'	4' x 5'
SIDEWALK CROSS SLOPE	1.5%	2% MAX
GUTTERLINE COUNTER SLOPE (NEW)	N/A	5% MAX

** MAXIMUM TRANSITION LENGTH TO THE EXISTING SIDEWALK IS 30 FT. FROM THE END OF THE PROPOSED SIDEWALK.

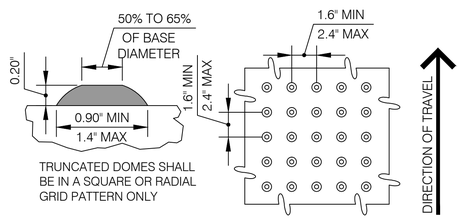

DETECTABLE WARNING TEXTURING DETAILS

APPROVED DETECTABLE WARNING SUPPLIERS CAN BE FOUND BY CONTACTING THE CITY OF OMAHA PUBLIC WORKS DEPARTMENT

ANY LOCATION DESIGNATED AS 1.5% SLOPE SHALL AT ALL TIMES BE LESS THAN 2% MAXIMUM AS CONSTRUCTED. ANY PORTION THAT EXCEEDS 2% SHALL BE REMOVED AND RECONSTRUCTED AT NO COST TO THE CITY OF OMAHA.

* NOTE: AT LEAST ONE LEADING CORNER OF DETECTABLE WARNINGS SHALL BE WITHIN 2" OF THE BACK OF CURB. DETECTABLE WARNINGS SHALL BE ORIENTED SUCH THAT THE PANEL SHALL BE PERPENDICULAR TO THE DIRECTION OF TRAVEL ON CENTERLINE OF RAMP.

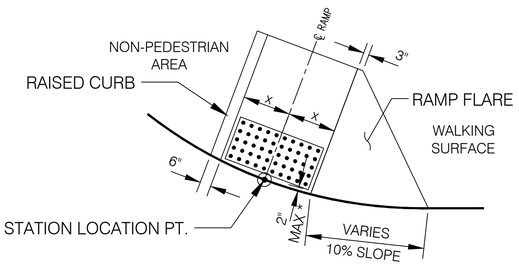

STANDARD RAMP LOCATION IDENTIFIER

NOTES

1. CURB RAMPS WITH DETECTABLE WARNINGS SHALL BE CONSTRUCTED WHERE A SIDEWALK ENTERS A STREET AND ANY SIGNALIZED ENTRANCES OR DRIVEWAYS. ALL OTHER CONSTRUCTIONS SHALL COMPLY WITH THE APPROPRIATE POLICIES, REGULATIONS, ETC. THE ENGINEER SHALL RESOLVE ANY DESCREPANCIES.
2. DETAILS SHOWN ARE NOT INTENDED TO ADDRESS ALL SITUATIONS. ALL WORK SHALL BE IN COMPLIANCE WITH ADA AND ACCESSIBILITY GUIDELINES FOR PEDESTRIAN FACILITIES.
3. THE ALIGNMENT OF THE RAMP SHALL BE PERPENDICULAR TO THE CURBLINE OR RADIAL WHEN THE RAMP FALLS IN A RADIUS.
4. ALL SLOPES AND DIMENSIONS SHALL COMPLY WITH THE APPROPRIATE POLICIES, REGULATIONS AND REQUIREMENTS. THE ENGINEER SHALL RESOLVE ANY DESCREPANCIES.
5. THE MINIMUM RAMP LENGTH SHALL BE ONE FOOT OF LENGTH PER INCH OF CURB HEIGHT MEASURED ALONG THE STEEPEST EDGE OF THE RAMP UNLESS APPROVED IN ADVANCE BY THE ENGINEER.
6. A MINIMUM 4' X 5' LANDING/MANEUVERING AREA SHALL BE CONSTRUCTED AT THE TOP OF THE RAMP. THE MAXIMUM CROSS SLOPE SHALL BE 2% MEASURED LONGITUDINALLY AND TRANSVERSELY.
7. RAMP FLARES SHALL BE CONSTRUCTED WHERE THE RAMP IS CONTIGUOUS WITH A WALKING AREA AND A SIDE APPROACH IS DEFINED. RAMP FLARES SHALL BE SLOPED AT 10% (RELATIVE) MAXIMUM PARALLEL TO THE CURB LINE.
8. THE SURFACE OF ALL CURB RAMPS SHALL RECEIVE A BROOM FINISH TRANSVERSELY TO THE SLOPE OF THE CURB RAMP. ALL RAMP FLARES AND WINGS SHALL RECEIVE A BROOM FINISH.
9. DETECTABLE WARNINGS SHALL CONFORM TO ADA AND ACCESSIBILITY GUIDELINES FOR PEDESTRIAN FACILITIES AND EXTEND THE FULL WIDTH OF THE RAMP WITH UP TO 2" OF SPACING ON EACH SIDE FOR ALLOWANCE OF FORM WORK. WARNINGS SHALL BE LOCATED WITH THE NEAREST EDGE 2" MAXIMUM FROM THE BACK CURB.
10. THE NORMAL GUTTER LINE PROFILE SHALL BE MAINTAINED AROUND THE RADIUS.
11. ALL CURB RAMPS SHALL HAVE POSITIVE DRAINAGE.
12. A CONTRACTION JOINT SHALL BE PLACED AT EACH CORNER OF DETECTABLE WARNING PANELS AS NOTED ON THE PLANS OR AS RECOMMENDED BY THE MANUFACTURER.
13. RAMPS SHALL BE FORMED AND POURED SEPARATE OF ANY LANDING, IMPRINTED CONCRETE SURFACES, CURB AND GUTTER AND ANY OTHER ADJACENT IMPROVEMENTS UNLESS DUMMY FORMS ARE USED TO ESTABLISH ALL CRITICAL SLOPES DURING STRIKEOFF AND FINISHING OPERATIONS.
14. REMOVE ANY DUMMY FORMS AND PLACE TRUNCATED DOME PANELS IN A MANNER THAT DOES NOT DISTURB THE SURROUNDING FINISHED CONCRETE SURFACE.
15. INSTALL 3/8" EXPANSION JOINTS ONLY AT ALL SIDEWALK/RECREATIONAL TRAIL TO SIDEWALK/RECREATIONAL TRAIL CONNECTIONS. INSTALL 1" EXPANSION MATERIAL ONLY ALONG BACK OF CURB ADJACENT TO ALL CONCRETE. INSTALL 3/8" EXPANSION MATERIAL BETWEEN RAMP AND CURB. INSTALL BOND BREAKER ACCEPTABLE TO THE ENGINEER AROUND ALL STRUCTURES.
16. ALL RAMP LOCATIONS SHALL BE IDENTIFIED IN THE PLANS BY STATION AND OFFSET, AND BY NORTHING AND EASTING COORDINATES.
17. JOINTING SHOWN FOR ILLUSTRATIVE PURPOSES ONLY. ALL JOINTING SHALL BE IN ACCORDANCE WITH ACCEPTED PRACTICES. AT A MINIMUM, JOINTING SHALL SEPARATELY DEFINE RAMPS AND LANDING AREAS.
18. CONTACT THE CITY OF OMAHA PUBLIC WORKS DEPARTMENT FOR AN APPROVED MATERIALS LIST OF DETECTABLE WARNINGS.
19. "T" INTERSECTIONS SHALL BE EVALUATED BASED ON P.R.O.W.A.G GUIDE LINES.

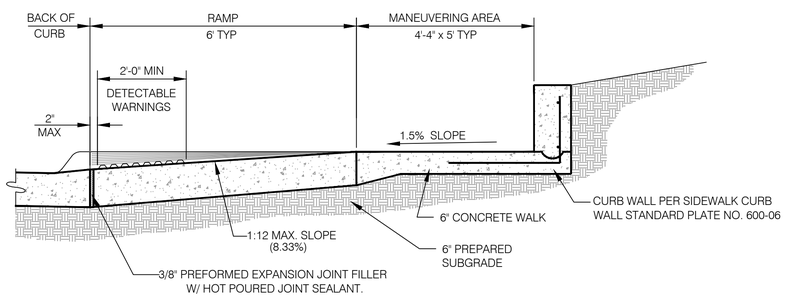

COMBINATION RAMP SECTION

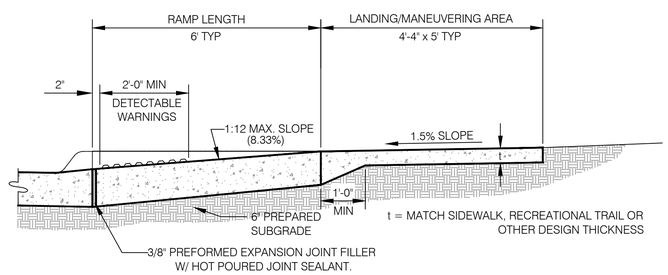

TYPICAL CURB RAMP LONGITUDINAL SECTION

RAISED CURBS REQUIRED AT NON-PEDESTRIAN AREAS. SIDE FLARES REQUIRED WHEN PEDESTRIAN TRAFFIC HAS ACCESS TO CURB RAMP FROM SIDE.

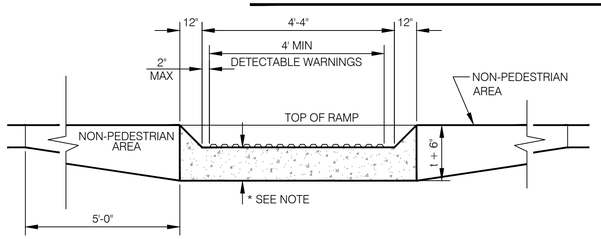

TYPICAL NON-FLARED RAMP SECTION

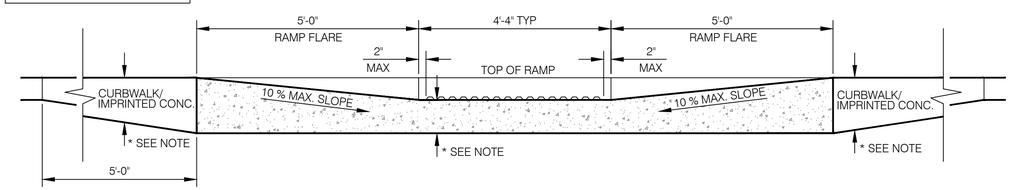

CURB RAMP SECTION WITH 10% SIDEFLARES

* RAMP, CURBWALK, IMPRINTED SURFACING ETC. THICKNESS SHALL BE SAME AS THICKNESS OF PAVEMENT FROM OUTER EDGE OF RAMP TO OUTER EDGE OF RAMP.

L:\Engineering\01101\DOCUMENTS\Standard Plates\CAD Files from City\REVISED PLATE NUMERS\PLT-500-82.dwg, 2/17/2014 1:59:31 PM, rick, 1:1.0241, Lamp, Rynearson & Associates

		DESIGN ENGINEER	CITY OF OMAHA PUBLIC WORKS DEPARTMENT
		CITY ENGINEER	CONCRETE CURB RAMP GENERAL NOTES AND MEASUREMENT DETAILS

STANDARD PLATE **500-82** SHEET 1/4

ISSUE DATE: ..... DECEMBER 10, 2013

TYPICAL SIDE APPROACH CURBWALK

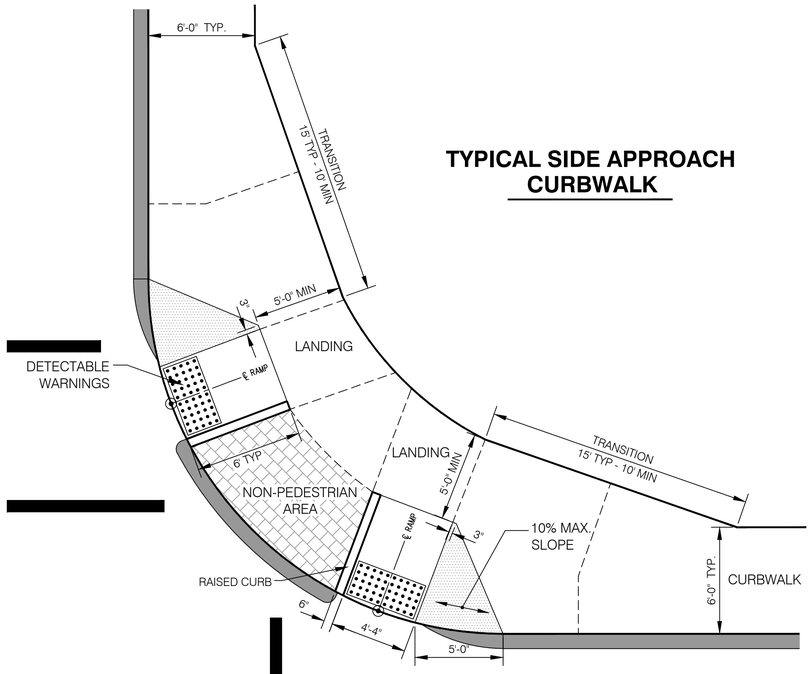

TYPICAL BACK APPROACH CURBWALK

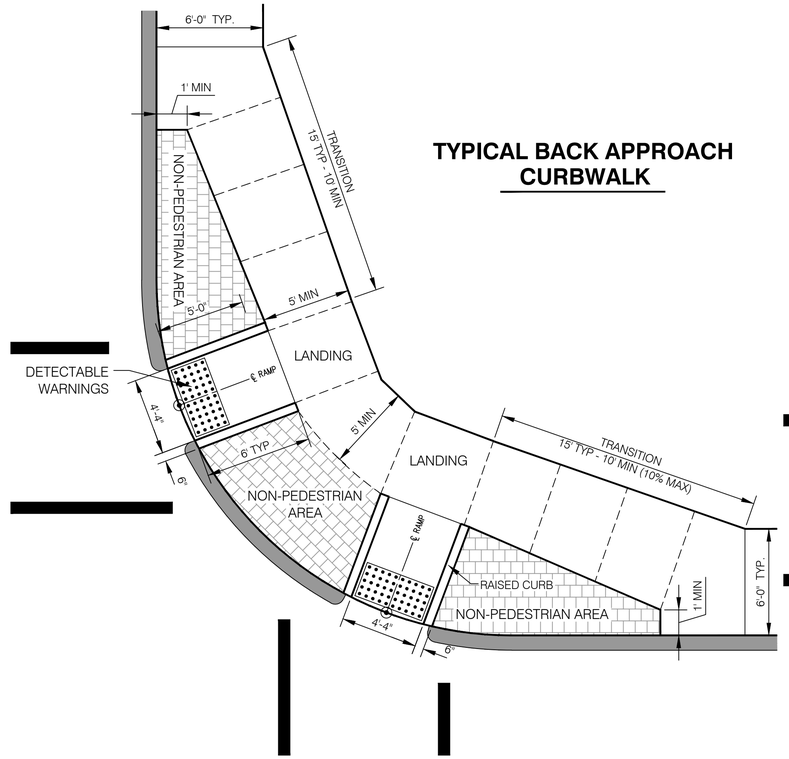

TYPICAL PLAN 10' RECREATIONAL TRAIL

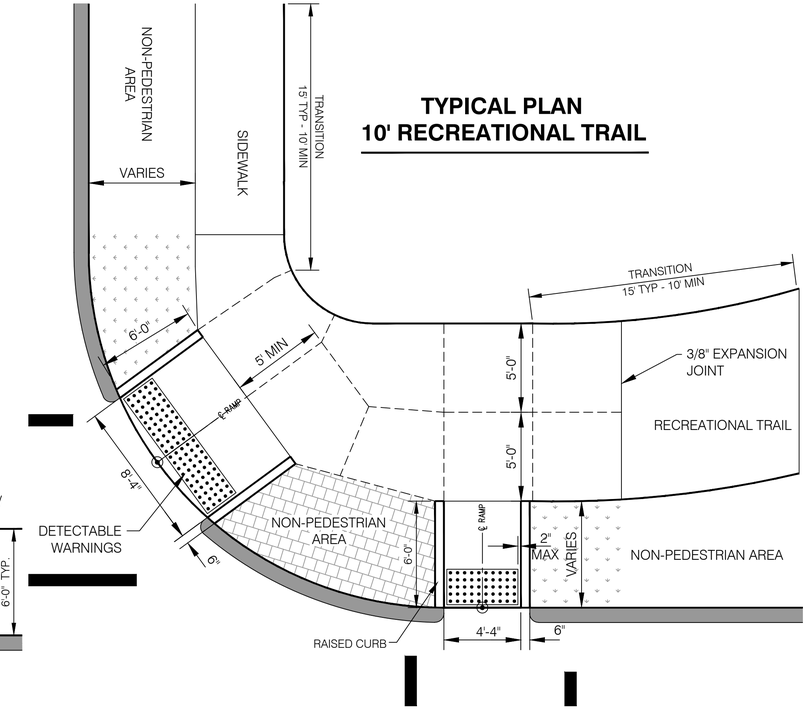

TYPICAL PLAN SETBACK SIDEWALK

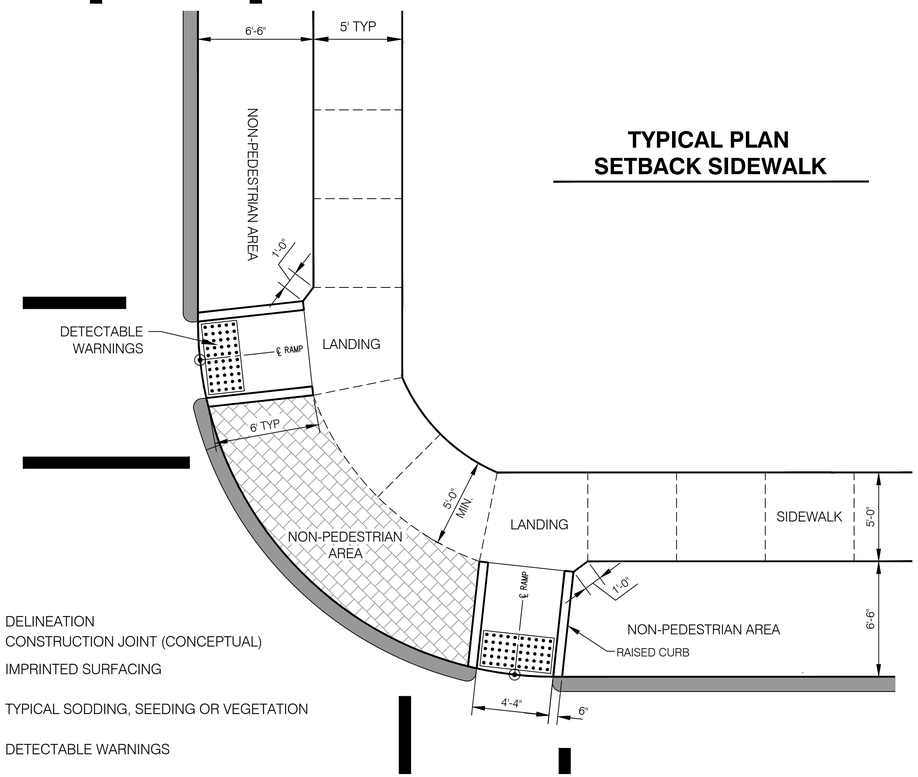

LEGEND

- = DELINEATION
- = CONSTRUCTION JOINT (CONCEPTUAL)
- = IMPRINTED SURFACING
- = TYPICAL SODDING, SEEDING OR VEGETATION
- = DETECTABLE WARNINGS

RECREATIONAL TRAIL PLAN 10' RECREATIONAL TRAIL W/ 2' IMPRINTED SURFACING

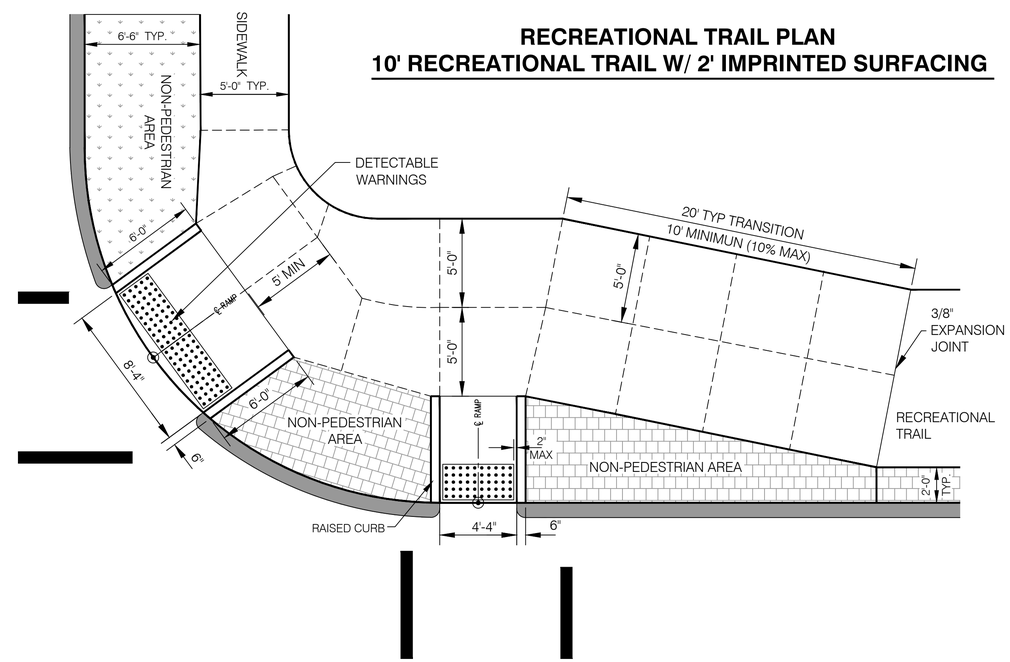

			CITY OF OMAHA PUBLIC WORKS DEPARTMENT		
		DESIGN ENGINEER	**CONCRETE CURB RAMP**	**STANDARD PLATE 500-82**	SHEET 2/4
		CITY ENGINEER	TYPICAL NEW CONSTRUCTION OPTIONS	ISSUE DATE: ..... DECEMBER 10, 2013	

L:\Engineering\001\0100\DOCUMENTS\Standard Plates\ACAD Files from City\REVISED PLATE NUMBERS\PLT-500-82.dwg, 2/17/2014 1:59:38 PM, rick, 1:1.0241, Lamp, Rynearson & Associates

SMALL RADIUS PLAN
4' SIDEWALK....4' SETBACK

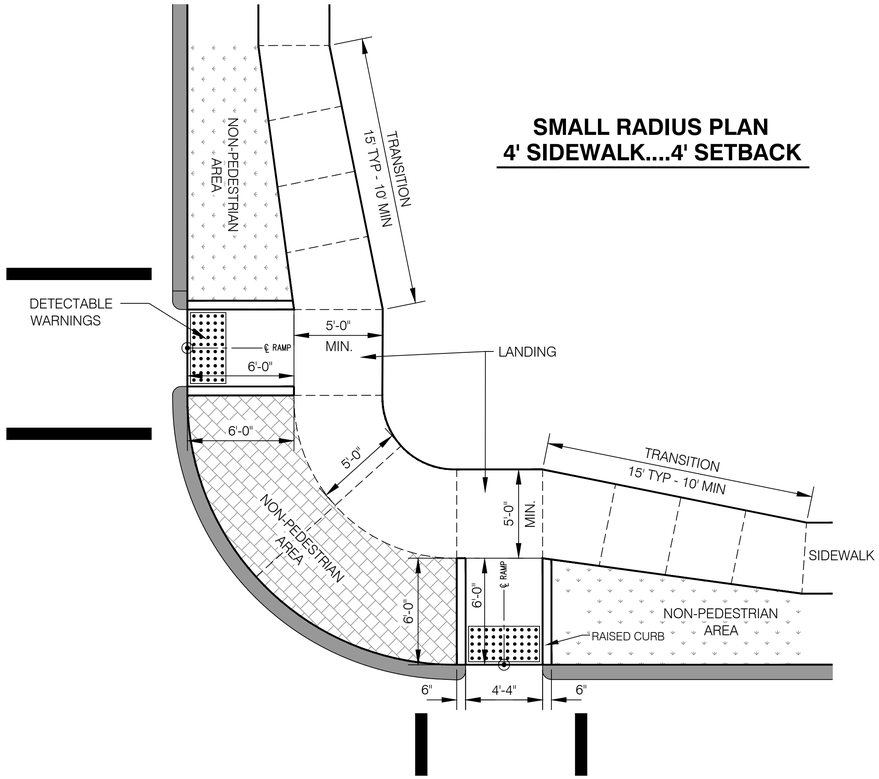

SINGLE RAMP PLAN
4' SIDEWALK....4' SETBACK

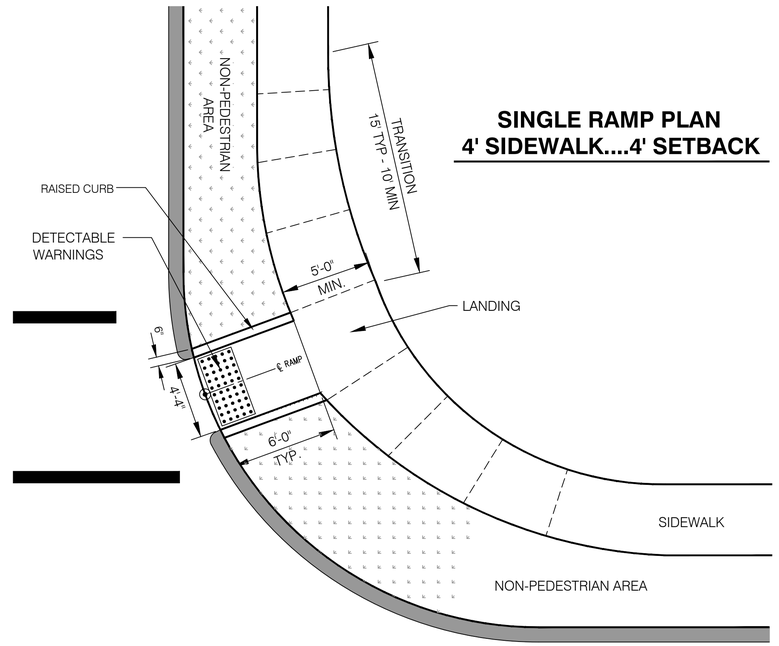

ANY LOCATION DESIGNATED AS 1.5% SLOPE SHALL AT ALL TIMES BE LESS THAN 2% MAXIMUM AS CONSTRUCTED. ANY PORTION THAT EXCEEDS 2% SHALL BE REMOVED AND RECONSTRUCTED AT NO COST TO THE CITY OF OMAHA.

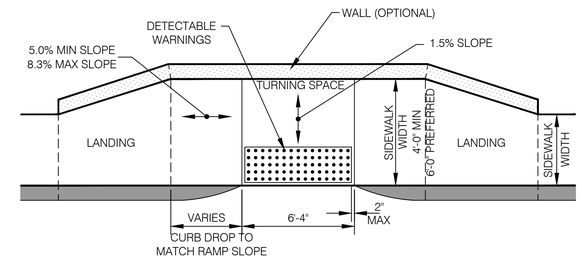

TYPICAL MID-BLOCK STYLE PLAN
(NO SETBACK OPTION SHOWN)

MIDBLOCK STYLE RAMPS ARE DEFINED AS RAMPS BUILT ALONG TANGENT CURB SEGMENTS OUTSIDE THE CORNER RADII.

TYPICAL PLAN
4' SIDEWALK....10' SETBACK

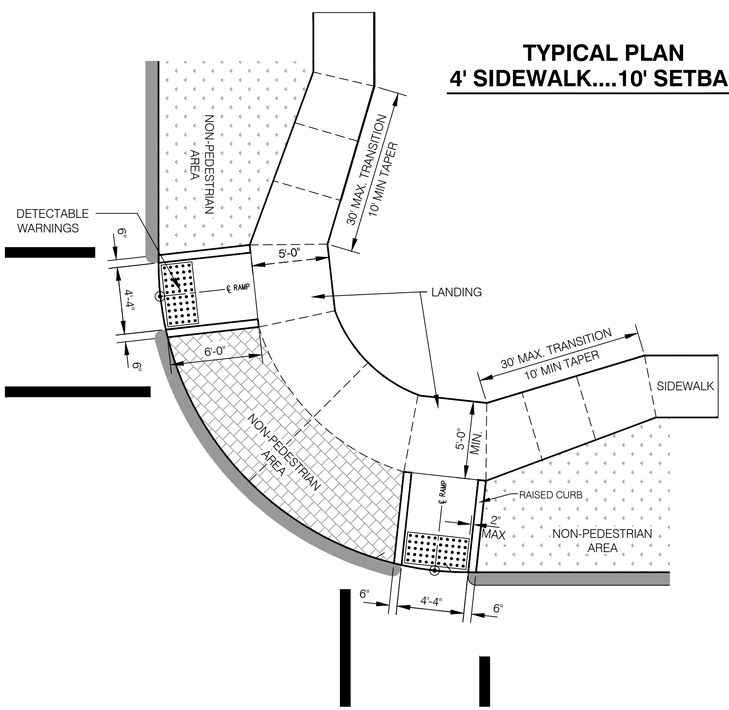

SHORTENED RAMP PLAN*
4' SIDEWALK....4' SETBACK

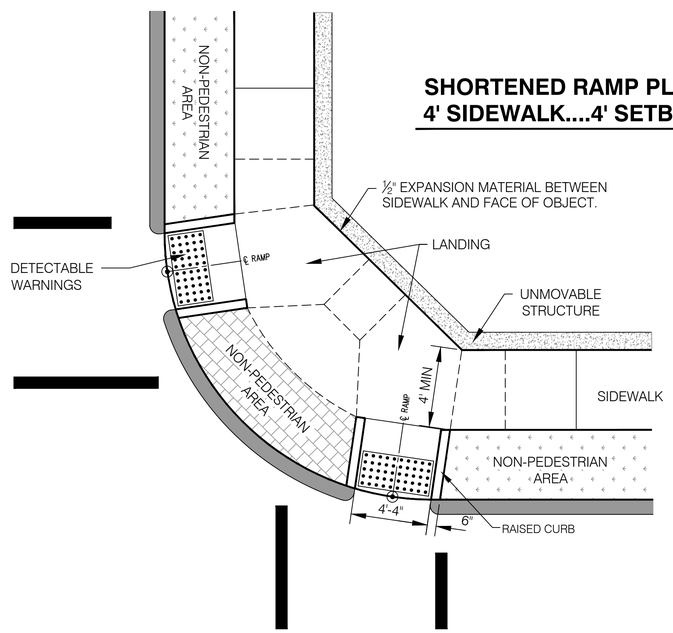

MID-BLOCK STYLE PLAN*
4' SIDEWALK....4' SETBACK

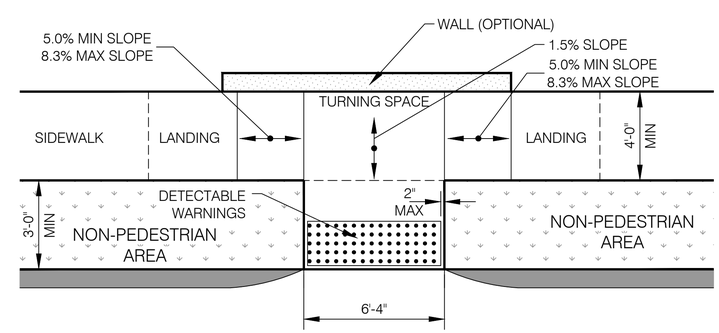

LEGEND

- = DELINEATION
- = CONSTRUCTION JOINT (CONCEPTUAL)
- = IMPRINTED SURFACING
- = TYPICAL SODDING, SEEDING OR VEGETATION
- = DETECTABLE WARNINGS

L:\Engineering\01101\2\DOCUMENTS\Standard Plates\CAD Files from City\REVISED PLATE NUMERS\PL1-500-82.dwg, 2/17/2014 2:02:02 PM, rick, 1:1.0241, Lamp, Rynearson & Associates

		DESIGN ENGINEER	CITY OF OMAHA — PUBLIC WORKS DEPARTMENT
		CITY ENGINEER	**CONCRETE CURB RAMP** TYPICAL RETRO-FIT OPTIONS
			STANDARD PLATE **500-82** — SHEET 3/4
			ISSUE DATE: ..... DECEMBER 10, 2013

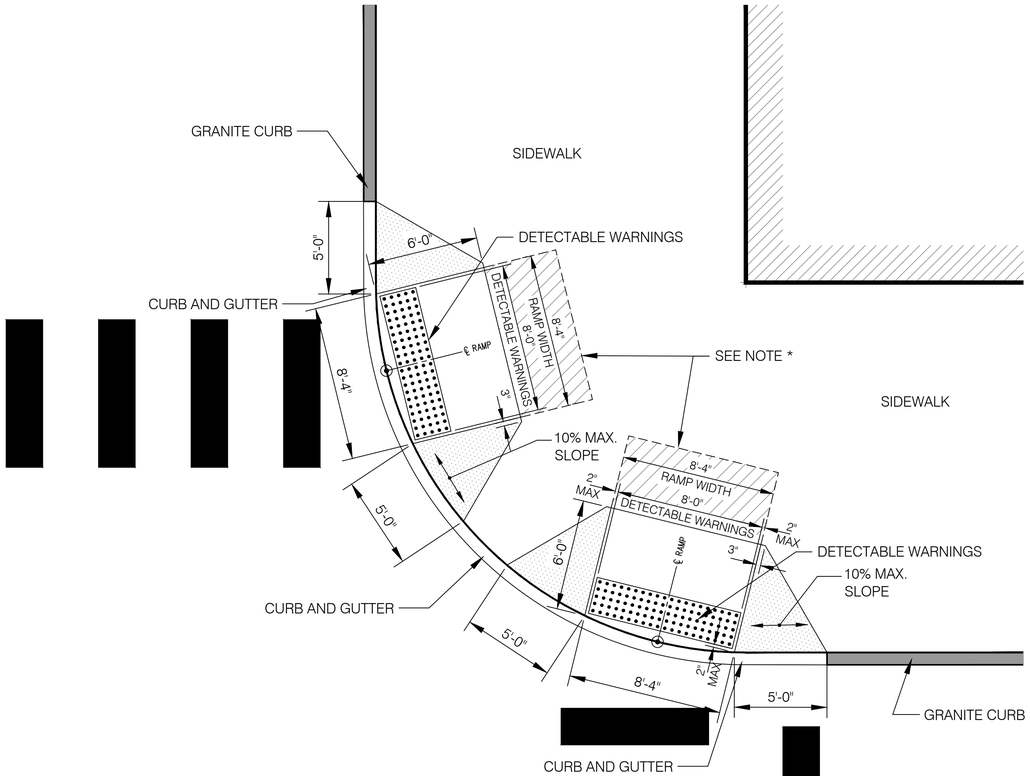

20' RADIUS PLAN
8' RAMP WIDTH

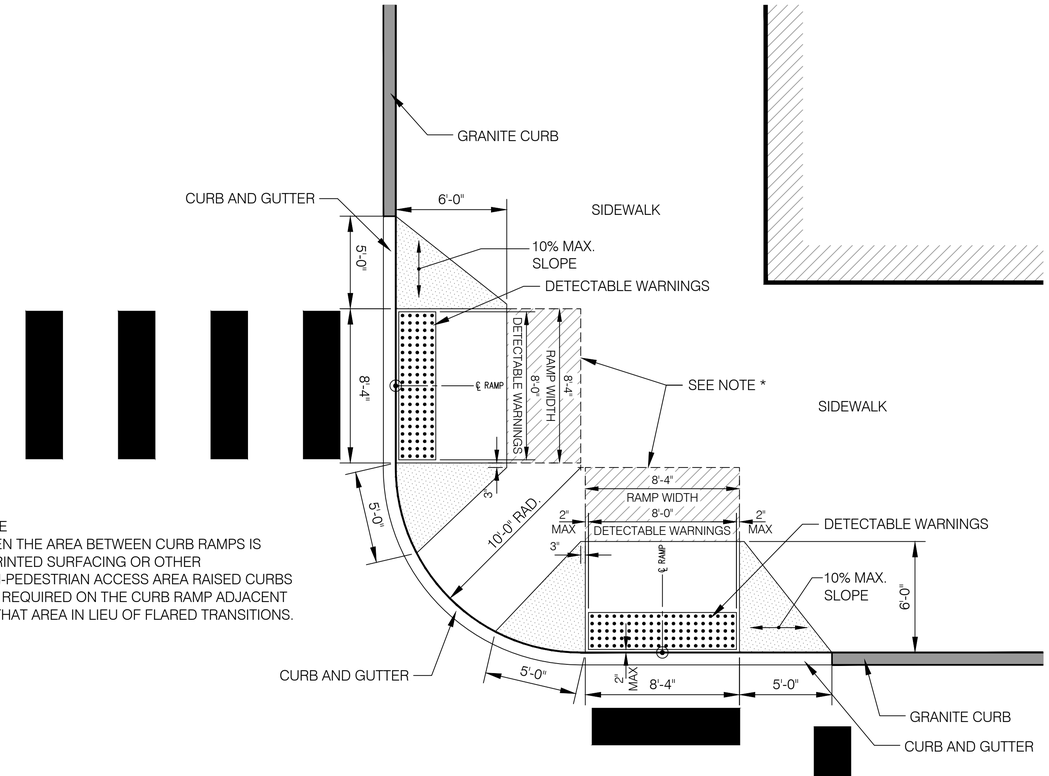

10' RADIUS PLAN
8' RAMP WIDTH

NOTE
WHEN THE AREA BETWEEN CURB RAMPS IS IMPRINTED SURFACING OR OTHER NON-PEDESTRIAN ACCESS AREA RAISED CURBS ARE REQUIRED ON THE CURB RAMP ADJACENT TO THAT AREA IN LIEU OF FLARED TRANSITIONS.

* NOTE
AN AREA THE WIDTH OF THE CURB RAMP BY 4'-0" SHALL BE PROVIDED AT THE TOP OF THE RAMP WITH SLOPES LONGITUDINALLY AND TRANSVERSELY LESS THAN 2% AT ALL TIMES TO PROVIDE A LANDING AND TURNING SPACE.

CENTRAL BUSINESS DISTRICT IS DEFINED BY THE AREA WITHIN AND ADJACENT TO THE MISSOURI RIVER, INTERSTATE 480, CUMING STREET AND LEAVENWORTH STREET.

LEGEND

= LANDING/TURNING AREA

= RAMP FLARE

= DETECTABLE WARNINGS

		DESIGN ENGINEER	CITY OF OMAHA PUBLIC WORKS DEPARTMENT
		CITY ENGINEER	**CONCRETE CURB RAMP** CENTRAL BUSINESS DISTRICT
			STANDARD PLATE 500-82 SHEET 4/4
			ISSUE DATE: ..... DECEMBER 10, 2013

L:\Engineering\011\0\DOCUMENTS\Standard Plates\ACAD Files from City\REVISED PLATE NUMERS\PLT 500-82.dwg, 2/17/2014 2:04:07 PM, rdik, 1:1.0241, Lamp, Rynearson & Associates

WALL STEP DETAIL

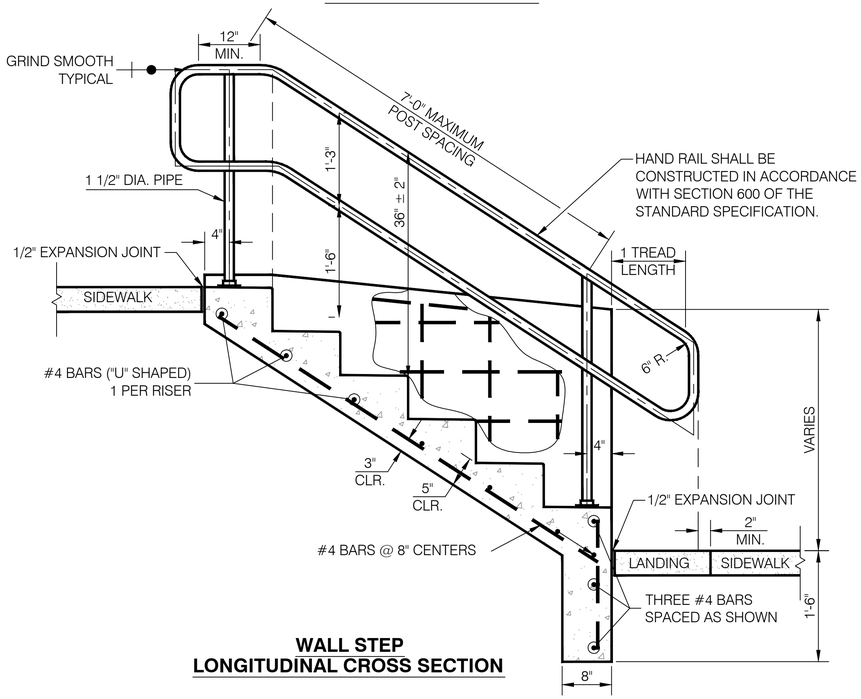

WALL STEP LONGITUDINAL CROSS SECTION

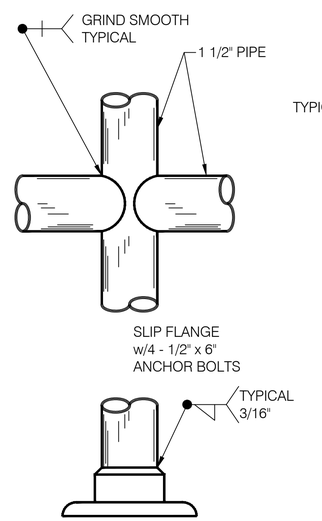

POST BASE DETAIL

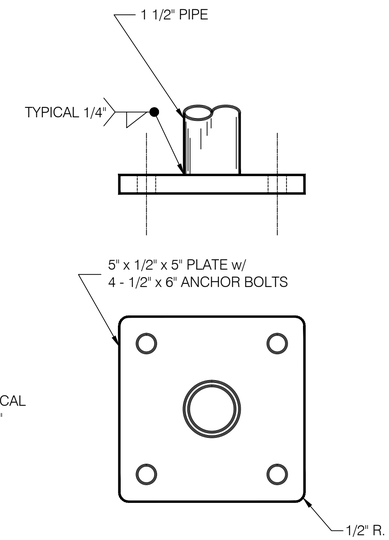

POST BASE ALTERNATE

TERRACE STEP DETAIL

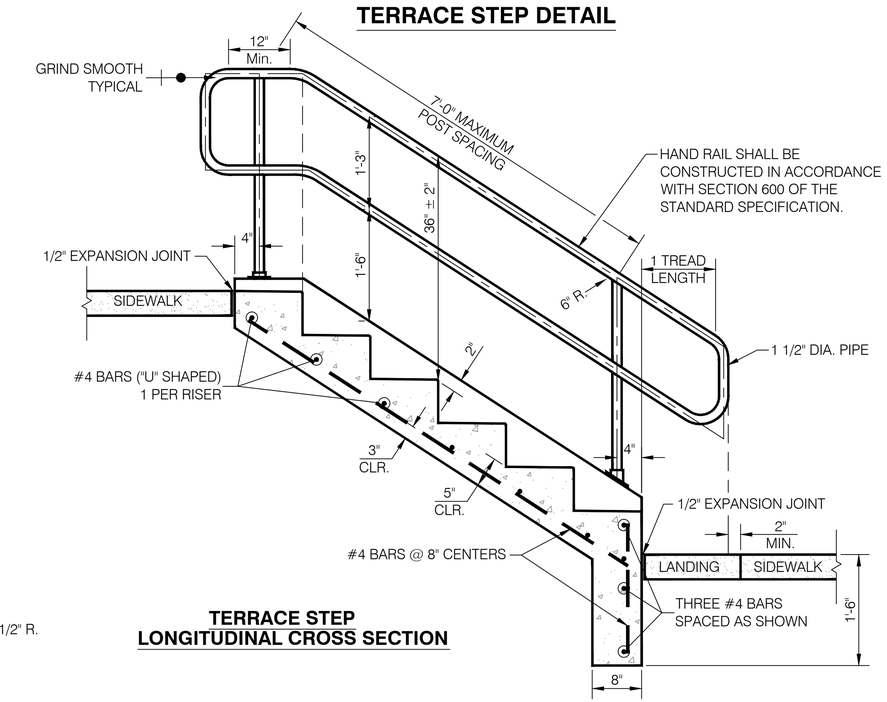

TERRACE STEP LONGITUDINAL CROSS SECTION

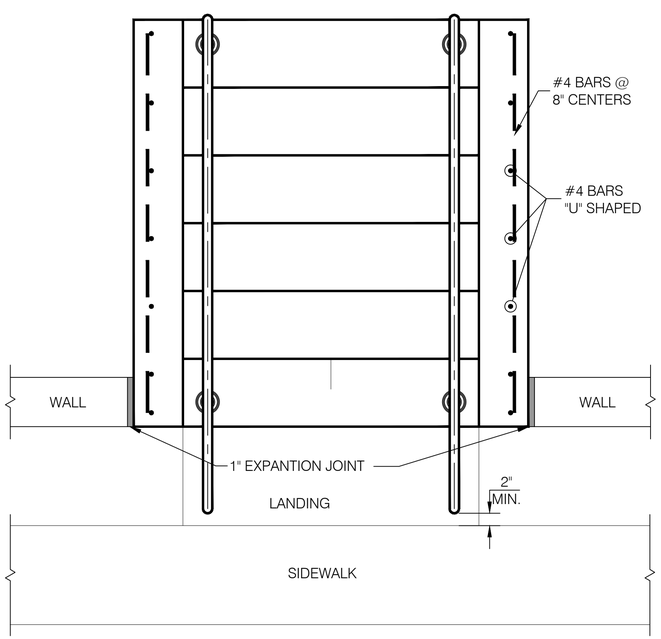

WALL STEP PLAN VIEW

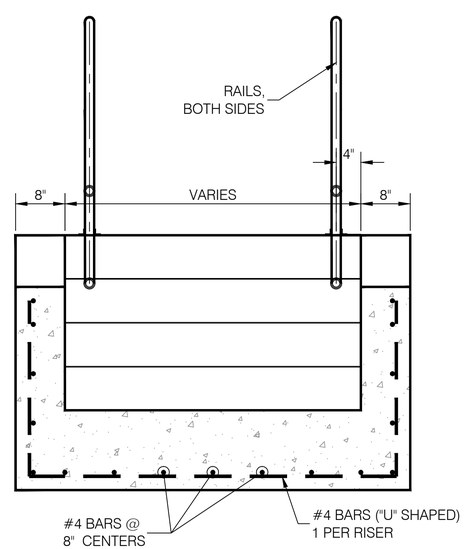

WALL STEP TYPICAL CROSS SECTION

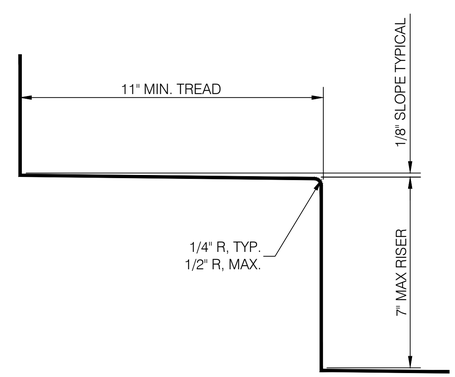

TYPICAL RISER SECTION

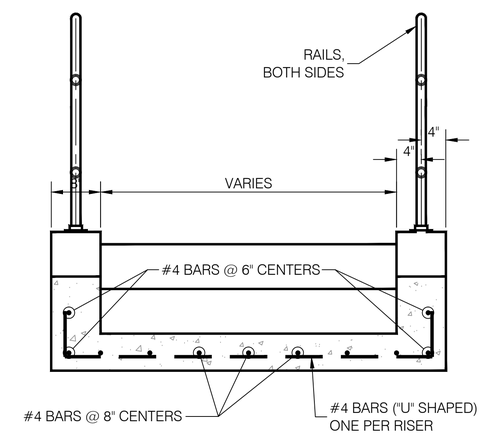

TERRACE STEP TYPICAL CROSS SECTION

NOTES

1. CONCRETE SHALL BE L65.
2. WIDTH OF STEPS SHALL BE AS SHOWN ON THE PLANS OR AS DIRECTED BY THE ENGINEER
3. TREADS SHALL BE GIVEN A WOOD FLOAT FINISH AND ALL OTHER EXPOSED CONCRETE SHALL BE FINISHED SMOOTH.
4. ALL EXPOSED CONCRETE EDGES SHALL BE CHAMFERED.
5. REINFORCING STEEL SHALL BE PLACED AS SHOWN WITH 2" CLEARANCE. (UNLESS OTHERWISE SHOWN)
6. STEPS SHALL BE LIMITED TO 18 RISERS PER FLIGHT.
7. ALL STEPS OF FOUR RISERS OR MORE SHALL REQUIRE A HAND RAIL AS SHOWN.
8. HAND RAIL INTERMEDIATE POSTS, IF REQUIRED, SHALL BE EQUALLY SPACED BETWEEN END POSTS.
9. REINFORCING SHALL BE PLACED WITH A TOLERANCE OF -1/4" AND +1/2" ON CLEARANCE.

		DESIGN ENGINEER	CITY OF OMAHA PUBLIC WORKS DEPARTMENT
		CITY ENGINEER	WALL STEP
			STANDARD PLATE 600-04 — SHEET 1/1
			ISSUE DATE: ... DECEMBER 10, 2013

L:\Engineering\011010\2\DOCUMENTS\Standard Plates\ACAD Files from City\REVISED PLATE NUMERS\PL-T-600-04.dwg, 3/6/2014 2:18:08 PM, rickk, 1:1.0241, Lamp, Rynearson & Associates

SIDEWALK CURBWALL

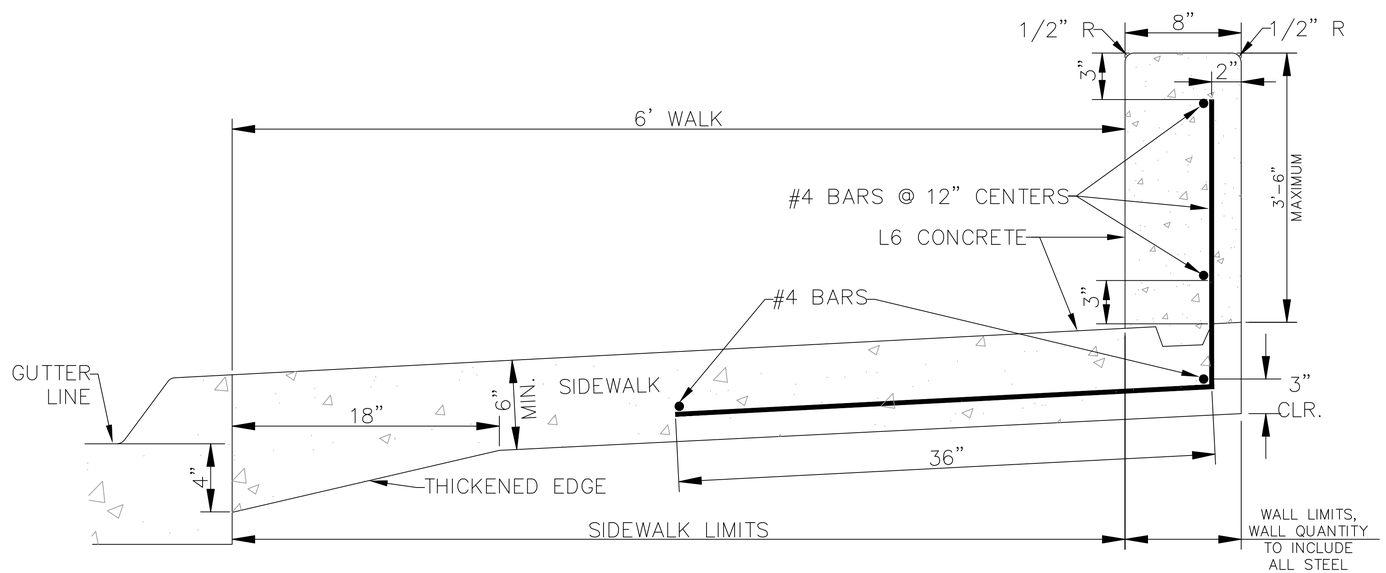

NOTES

1. ALL REINFORCING STEEL SHALL BE PLACED AS SHOWN WITH 2" CLEARANCE.
2. KEY WAY SHALL BE 1.5" X 3.5" AND BEVELED AS SHOWN.
3. ALL WORK AND MATERIALS SHALL CONFORM TO SECTION 500 OF THE STANDARD SPECIFICATIONS.
4. REINFORCING SHALL BE PLACED WITH A TOLERANCE OF -1/4" AND +1/2" ON CLEARANCE.

				DESIGN ENGINEER DATE	CITY OF OMAHA PUBLIC WORKS DEPARTMENT
				CITY ENGINEER DATE	CURB WALL — STANDARD PLATE 600-06 — SHEET 1/1 — ISSUE DATE: ... DECEMBER 10, 2013

L:\Engineering\0110102\DOCUMENTS\Standard Plates\ACAD Files from City\REVISED PLATE NUMERS\PLT-600-06.dwg, 3/6/2014 2:20:46 PM, rick, 1:1.0241, Lamp, Rynearson & Associates

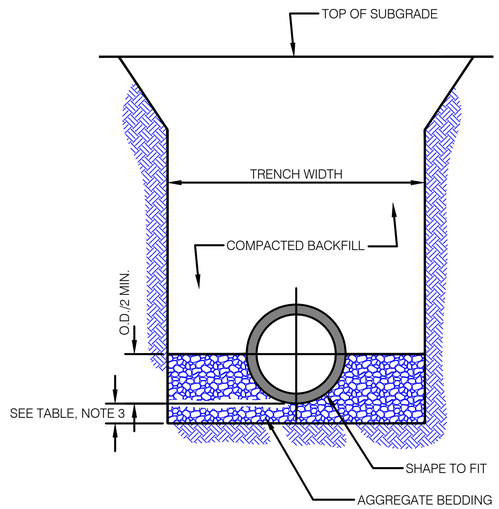

RIGID PIPE BEDDING

TABLE A
SEWER PIPE TRENCH WIDTH

PIPE DIAMETER (INCHES)	RIGID AND SEMI-RIGID PIPE: MINIMUM TRENCH WIDTH	RIGID AND SEMI-RIGID PIPE: MAXIMUM TRENCH WIDTH	FLEXIBLE PIPE*
8"	X	X	*FLEXIBLE PIPE TRENCH WIDTH SHALL BE DESIGNED BASED ON SOIL CONDITIONS AND DEPTH OF COVER BY A PROFESSIONAL ENGINEER AS SHOWN ON THE PLANS.
10"	X	X	
12"	3' 4"	4' 6"	
15"	3' 8"	4' 6"	
18"	3' 11"	5' 0"	
21"	4' 3"	5' 6"	
24"	4' 6"	5' 6"	
27"	4' 10"	6' 6"	
30"	5' 2"	6' 6"	
36"	5' 9"	7' 6"	
42"	6' 4"	8' 0"	
48"	6' 10"	9' 0"	
54"	7' 5"	10' 0"	
60"	8' 0"	10' 0"	
66"	8' 10"	11' 0"	
72"	9' 8"	13' 0"	
78"	10' 4"	14' 0"	
84"	11' 0"	14' 0"	
90"	12' 0"	15' 0"	

NOTES

1. ALL SEWERS SHALL BE INSTALLED AS SHOWN UNLESS OTHERWISE CALLED FOR BY THE PLANS, THE SPECIAL PROVISIONS OR AUTHORIZED BY THE ENGINEER.
2. AGGREGATE BEDDING SHALL BE IN ACCORDANCE WITH THE MATERIAL REQUIREMENTS OF SECTION 700 OF THE STANDARD SPECIFICATIONS.
3. THE MINIMUM AGGREGATE BEDDING DEPTH BELOW THE PIPE OR MANHOLE SHALL CONFORM TO THE FOLLOWING:

INTERNAL PIPE DIAMETER	MINIMUM BEDDING DEPTH
30" OR SMALLER, MANHOLES...	6"
OVER 30" TO 60"	9"
OVER 60"	12"

4. SEWER PIPE SHALL BE GENERALLY CLASSIFIED AS FOLLOWS:
   RIGID PIPE: R.C.P.
   SEMI-RIGID: D.I.P., VCP, CORRUGATED ALUMINUM
   FLEXIBLE: SOLID WALL PVC, CORRUGATED PVC, PROFILE WALL PVC, CENTRIFUGALLY CAST FIBERGLASS POLYMER MORTAR PIPE
5. THE MINIMUM AND MAXIMUM TRENCH WIDTHS FOR RIGID, SEMI-RIGID AND FLEXIBLE PIPE SHALL BE AS SHOWN IN TABLE A.
6. SOIL BACKFILL SHALL BE IN ACCORDANCE WITH THE REQUIREMENTS OF SECTION 200 OF THE STANDARD SPECIFICATIONS.
7. IF UNSTABLE TRENCH SUBGRADE CONDITIONS ARE ENCOUNTERED, ADDITIONAL AGGREGATE BEDDING OR FOUNDATION ROCK SHALL BE BE PLACED BELOW THE BEDDING AGGREGATE TO STABILIZE THE TRENCH AS DIRECTED BY THE ENGINEER.
8. FOUNDATION ROCK SHALL CONSIST OF 3" MAXIMUM CRUSHED ROCK MEETING THE GRADATION REQUIREMENTS OF ASTM C 33, SIZE 2.
9. SEWER BEDDING DETAILS SHALL BE REVIEWED FOR APPLICABILITY BY A LICENSED PROFESSIONAL ENGINEER.

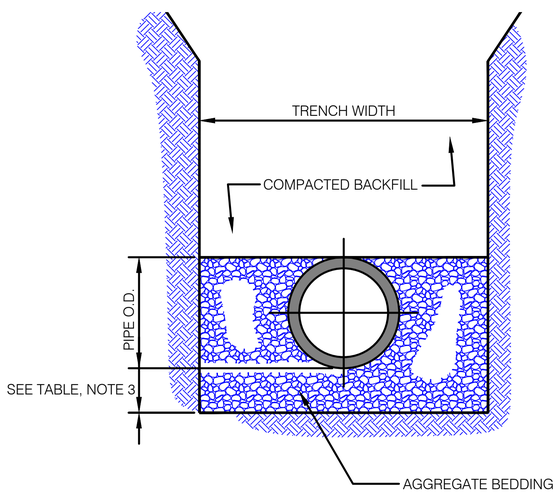

SEMI-RIGID PIPE BEDDING

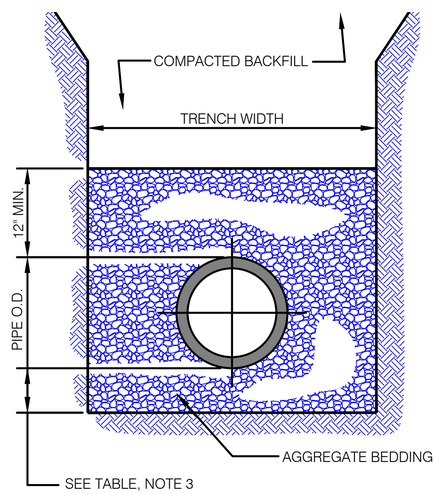

FLEXIBLE PIPE BEDDING

AGGREGATE BEDDING DETAILS

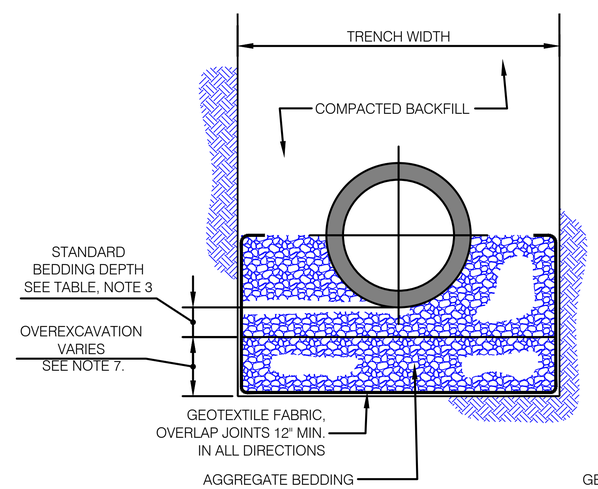

DETAIL 1

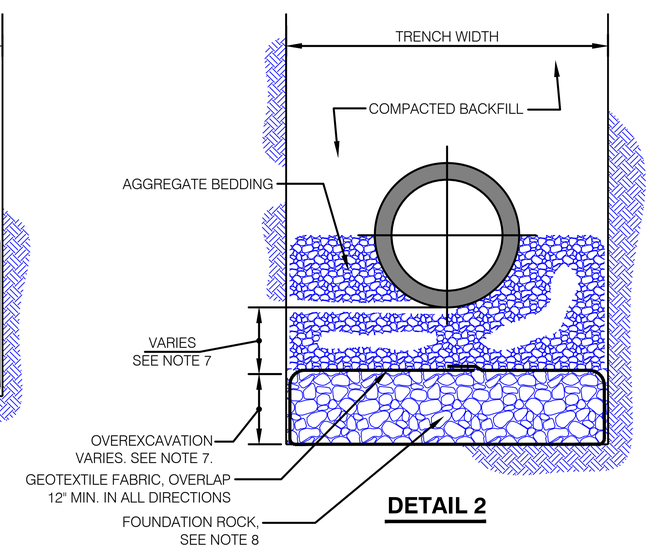

DETAIL 2

TRENCH STABILIZATION / OVEREXCAVATION DETAILS

		DESIGN ENGINEER	CITY OF OMAHA PUBLIC WORKS DEPARTMENT
		CITY ENGINEER	**SEWER BEDDING**
			STANDARD PLATE **700-01** SHEET 1/1
			ISSUE DATE: ... DECEMBER 10, 2013

L:\Engineering\011\01\DOCUMENTS\Standard Plates\ACAD Files from City\REVISED PLATE NUMERS\PLT-700-01.dwg, 2/17/2014 2:22:34 PM, rick, 1:1.0241, Lamp, Ryneamson & Associates

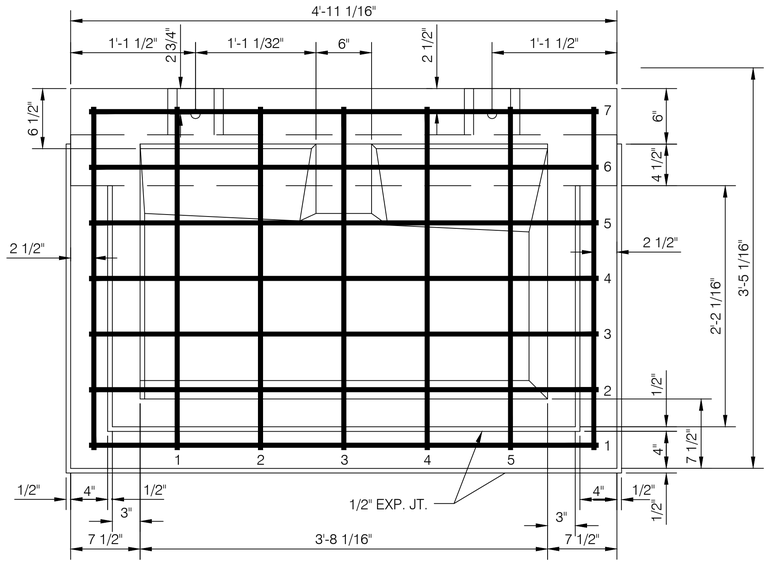

PLAN

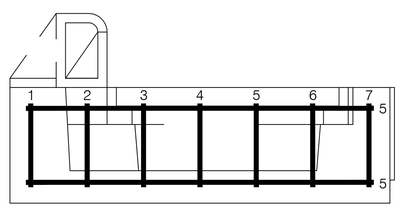

END

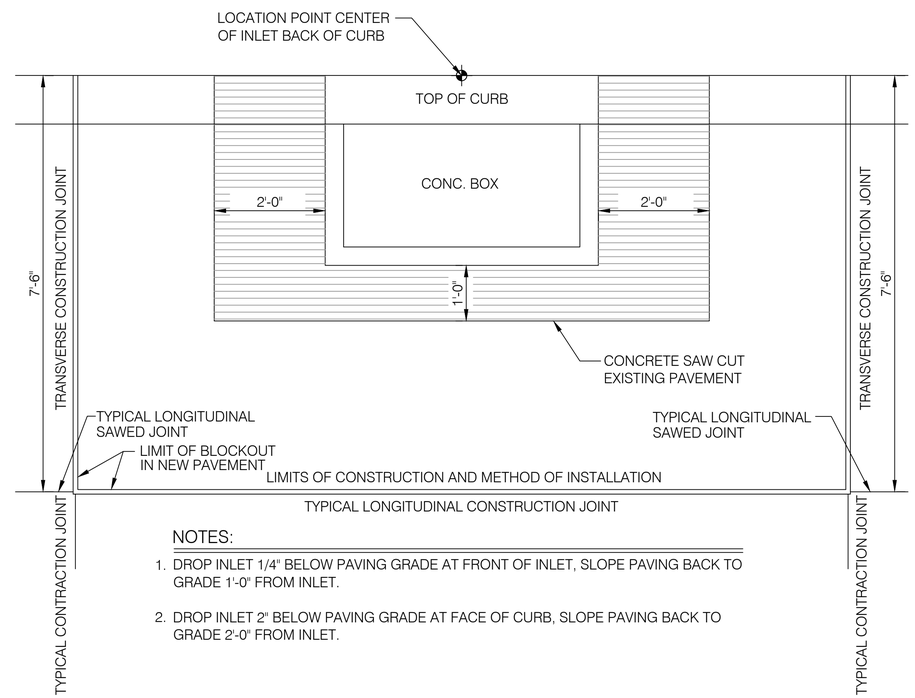

NOTES:

1. DROP INLET 1/4" BELOW PAVING GRADE AT FRONT OF INLET, SLOPE PAVING BACK TO GRADE 1'-0" FROM INLET.
2. DROP INLET 2" BELOW PAVING GRADE AT FACE OF CURB, SLOPE PAVING BACK TO GRADE 2'-0" FROM INLET.

APPROXIMATE QUANTITIES

REINFORCING STEEL

BAR	NO.	SIZE	LENGTH	DESCRIPTION	SPACED
1 to 5	5	NO. 4	3'-0"	TRANSVERSE FOOTING	9" CC
1 to 7	7	NO. 4	4'-6"	LONGITUDINAL FOOTING	6" CC
1	2	NO. 4	4'-6"	LONGITUDINAL SIDE WALL	6 5/8"
2	2	NO. 4	4'-6"	LONGITUDINAL SIDE WALL	6 5/8"
3	2	NO. 4	3'-8"	LONGITUDINAL SIDE WALL	6 5/8"
4	2	NO. 4	2'-5"	LONGITUDINAL SIDE WALL	6 5/8"
5	2	NO. 4	1'-3"	LONGITUDINAL SIDE WALL	6 5/8"
1	2	NO. 4	1'-1"	VERTICAL SIDE WALLS	9" CC
2	2	NO. 4	1'-5"	VERTICAL SIDE WALLS	9" CC
3	2	NO. 4	1'-9"	VERTICAL SIDE WALLS	9" CC
4	2	NO. 4	2'-1"	VERTICAL SIDE WALLS	9" CC
5	2	NO. 4	2'-6"	VERTICAL SIDE WALLS	9" CC
1	1	NO. 4	2'-11"	VERTICAL END WALLS	6" CC
2	1	NO. 4	2'-11"	VERTICAL END WALLS	6" CC
3	1	NO. 4	1'-2"	VERTICAL END WALLS	6" CC
4	1	NO. 4	1'-2"	VERTICAL END WALLS	6" CC
5	1	NO. 4	2'-11"	VERTICAL END WALLS	6" CC
6	1	NO. 4	2'-11"	VERTICAL END WALLS	6" CC
7	1	NO. 4	2'-11"	VERTICAL END WALLS	6" CC
8	1	NO. 4	0'-6"	VERTICAL END WALLS	6" CC
9	1	NO. 4	0'-6"	VERTICAL END WALLS	6" CC
1	1	NO. 4	3'-0"	LONGITUDINAL END WALLS	6 5/8"
2	1	NO. 4	1'-5"	LONGITUDINAL END WALLS	6 5/8"
3	1	NO. 4	1'-2"	LONGITUDINAL END WALLS	6 5/8"
4	1	NO. 4	1'-7"	LONGITUDINAL END WALLS	6 5/8"
5	1	NO. 4	3'-0"	LONGITUDINAL END WALLS	6 5/8"
6	1	NO. 4	3'-0"	LONGITUDINAL END WALLS	6 5/8"
7	1	NO. 4	1'-2"	LONGITUDINAL END WALLS	6 5/8"
8	1	NO. 4	0'-7"	LONGITUDINAL END WALLS	6 5/8"
9	1	NO. 4	0'-10"	LONGITUDINAL END WALLS	6 5/8"
1 to 7	7	NO. 4	0'-9"	VERTICAL END WALL	6" CC
1&2	2	NO. 4	3'-0"	LONGITUDINAL END WALL	6" CC
				TOTAL LENGTH 141.67 FT.	
				TOTAL WEIGHT 94.92 LBS.	

1 CAST IRON GRATE	APPROX. 365 LBS.
1 CAST IRON FRAME	APPROX. 292 LBS.
1 CAST IRON CURB INLET	APPROX. 290 LBS.
2 - 8" x 3/4" ANCHOR BOLTS W/3/4" WASHERS & HEX NUTS	
BITUMINOUS EXP. JT. MATERIAL 1/2" x 10" x 11' (PAVING DEPTH)	
BITUMINOUS EXP. JT. MATERIAL 1/2" x 4" x 8'-9" (FRAME DEPTH)	
BITUMINOUS EXP. JT. MATERIAL 1/2" x 8" x 11" (CURB DEPTH)	
CUBIC YARDS CONCRETE	.9 C.Y.
AREA OF BLOCKOUT (EXISTING PAVEMENT ONLY)	4.4 S.Y.

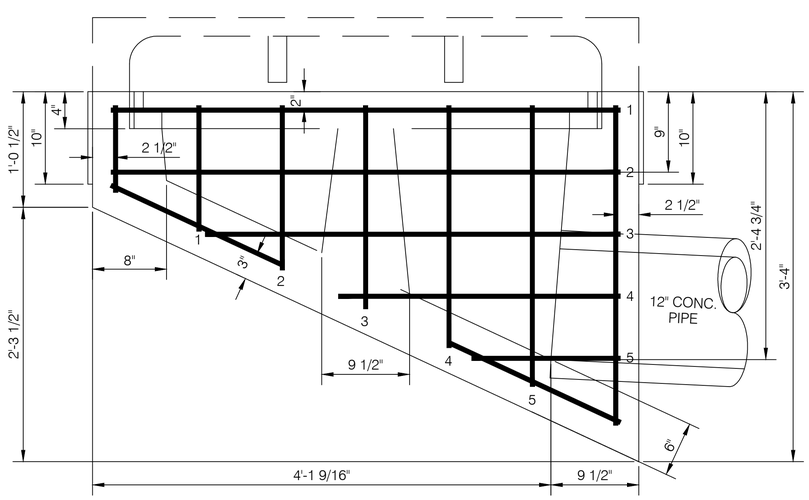

ELEVATION

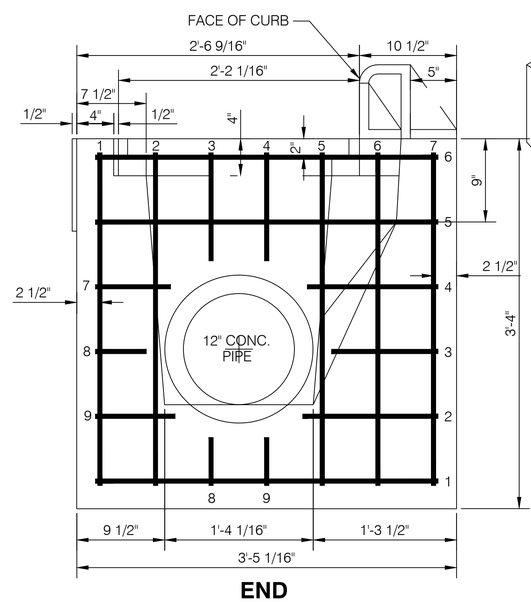

END

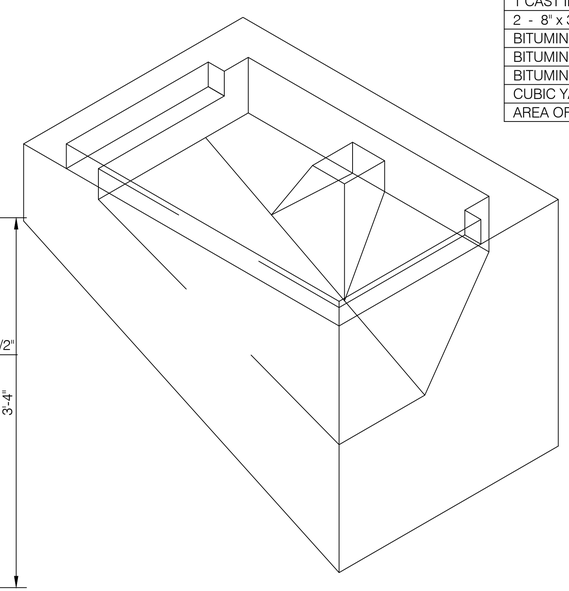

NOTES

1. CONCRETE SHALL BE CLASS L65M.
2. REINFORCING STEEL SHALL BE DEFORMED BARS IN ACCORDANCE WITH ASTM A615 GRADE 60.
3. REINFORCING BARS WILL BE TIE WIRED AT ALL POINTS OF INTERSECTION
4. STANDARD DRAWING OF CAST IRON CURB INLET AND FLAT GRATE AND FRAME. STANDARD PLATES NO. 700-92 AND 700-93.
5. INLET PIPE MAY BE INSTALLED AT END OR EITHER SIDE.
6. REINFORCING SHALL BE PLACED WITH A TOLERANCE OF -1/4" AND +1/2" ON CLEARANCE.

DESIGN ENGINEER

CITY ENGINEER

CITY OF OMAHA PUBLIC WORKS DEPARTMENT

TYPE "A" SINGLE INLET

STANDARD PLATE 700-03 SHEET 1/1

ISSUE DATE: ... DECEMBER 10, 2013

L:\Engineering\01101\DOCUMENTS\Standard Plates\CADFiles from City\REVISED PLATE NUMERS\PL-T-700-03.dwg, 3/6/2014 2:21:57 PM, rickk, 1:1.0241, Lamp: Rynearson & Associates

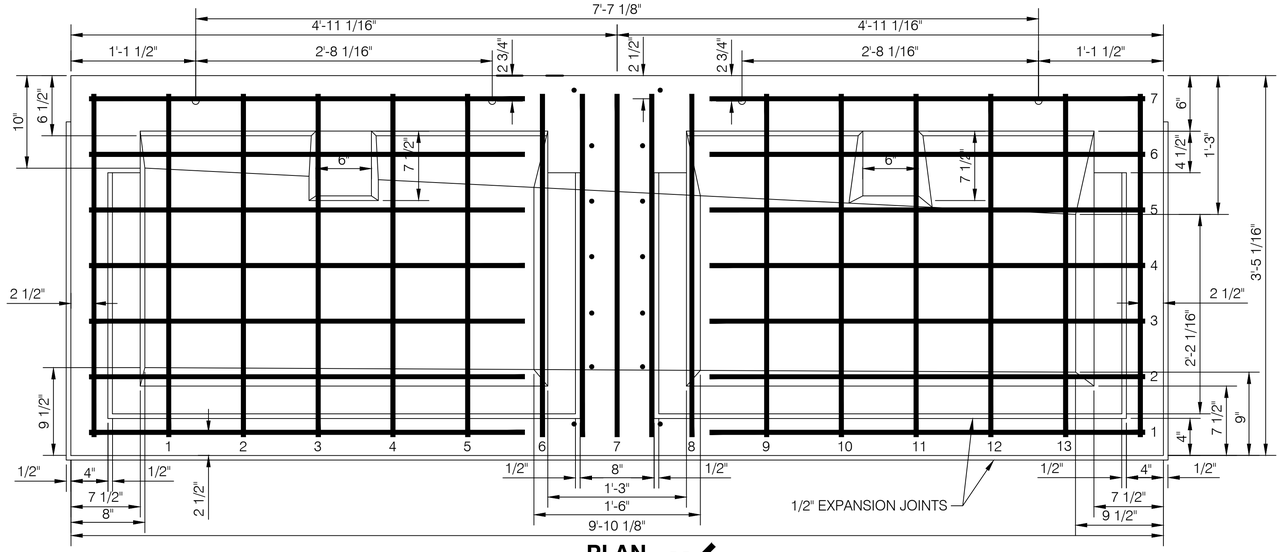

PLAN

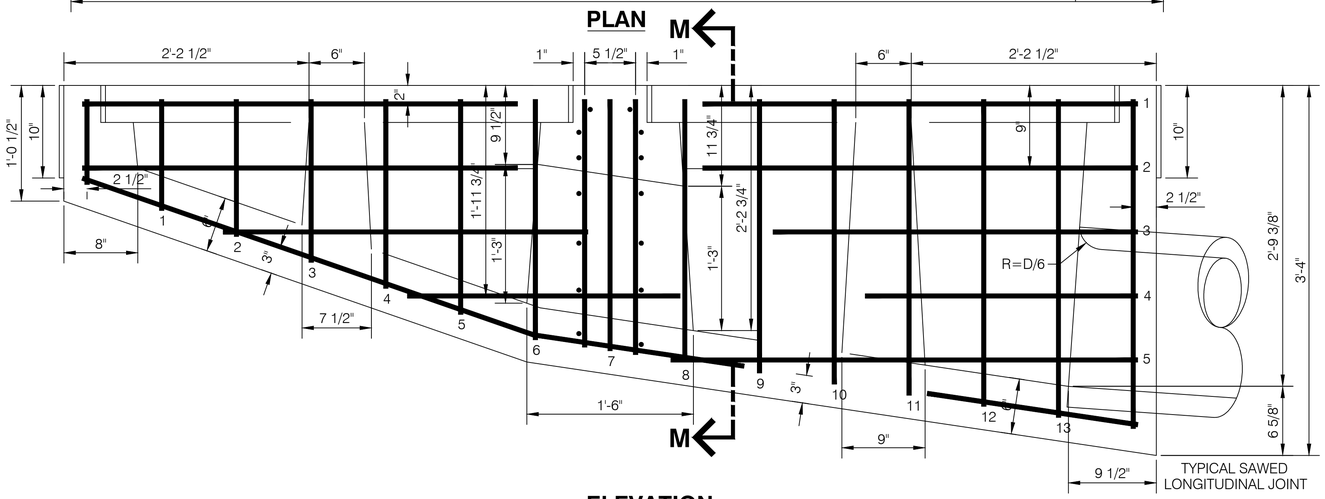

ELEVATION

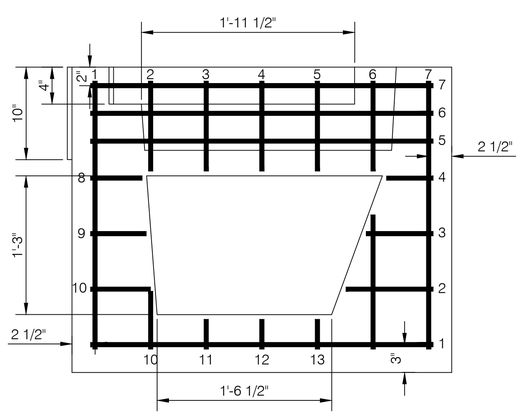

SECTION "M-M"

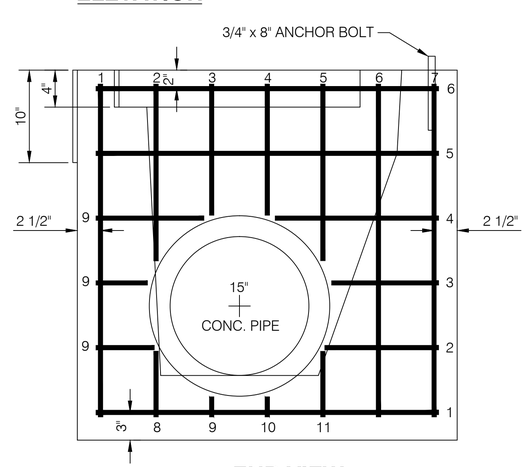

END VIEW

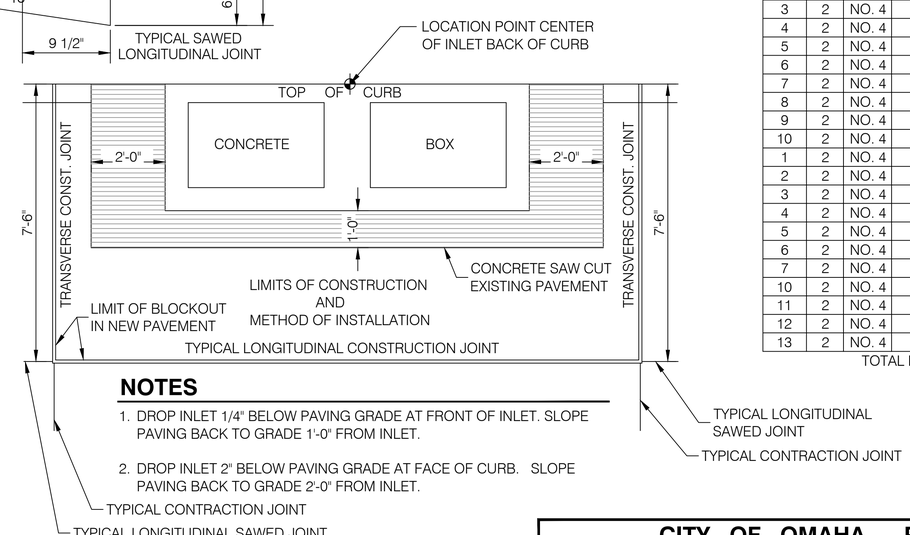

2 CAST IRON GRATE	APPROX. 365 LBS. EA. =	730 LBS.
2 CAST IRON FRAME	APPROX. 292 LBS. EA. =	584 LBS.
2 CAST IRON CURB INLET	APPROX. 290 LBS. EA. =	580 LBS.
4 - 8" x 3/4" ANCHOR BOLTS W/3/4" WASHERS & HEX NUTS		
BITUMINOUS EXP. JT. MATERIAL 1/2" x 10" x 16'-0" (PAVING DEPTH)		
BITUMINOUS EXP. JT. MATERIAL 1/2" x 4" x 16'-0" (FRAME DEPTH)		
BITUMINOUS EXP. JT. MATERIAL 1/2" x 8" x 0'-11" (CURB DEPTH)		
CUBIC YARDS CONCRETE		2.5 C.Y.
AREA OF BLOCK-OUT (EXISTING PAVEMENT ONLY)		6.8 S.Y.

NOTES

1. CONCRETE SHALL BE CLASS L65M.
2. REINFORCING STEEL SHALL BE DEFORMED BARS IN ACCORDANCE WITH ASTM A615 GRADE 60.
3. REINFORCING BARS WILL BE TIE WIRED AT ALL POINTS OF INTERSECTION
4. STANDARD DRAWING OF CAST IRON CURB INLET AND FLAT GRATE AND FRAME. SEE STANDARD PLATES NO. 700-92 AND 700-93.
5. INLET PIPE MAY BE INSTALLED AT END OR EITHER SIDE.
6. REINFORCING SHALL BE PLACED WITH A TOLERANCE OF -1/4" AND +1/2" ON CLEARANCE.

NOTES

1. DROP INLET 1/4" BELOW PAVING GRADE AT FRONT OF INLET. SLOPE PAVING BACK TO GRADE 1'-0" FROM INLET.
2. DROP INLET 2" BELOW PAVING GRADE AT FACE OF CURB. SLOPE PAVING BACK TO GRADE 2'-0" FROM INLET.

APPROXIMATE QUANTITIES

REINFORCING STEEL

BAR	NO.	SIZE	LENGTH	DESCRIPTION	SPACED
1to13	13	NO. 4	3'-1/4"	TRANSVERSE FOOTING	8 1/16"
1 to 7	7	NO. 4	9'-9"	LONGITUDINAL FOOTING	6" CC
1	2	NO. 4	0'-11 1/4"	VERTICAL SIDE WALLS	8 1/16"
2	2	NO. 4	1'-2 1/4"	VERTICAL SIDE WALLS	8 1/16"
3	2	NO. 4	1'-5 1/4"	VERTICAL SIDE WALLS	8 1/16"
4	2	NO. 4	1'-8"	VERTICAL SIDE WALLS	8 1/16"
5	2	NO. 4	1'-10 3/4"	VERTICAL SIDE WALLS	8 1/16"
6	2	NO. 4	2'-1 3/4"	VERTICAL SIDE WALLS	8 1/16"
7	2	NO. 4	2'-3 3/4"	VERTICAL SIDE WALLS	8 1/16"
8	2	NO. 4	2'-4"	VERTICAL SIDE WALLS	8 1/16"
9	2	NO. 4	2'-5 1/4"	VERTICAL SIDE WALLS	8 1/16"
10	2	NO. 4	2'-6 1/4"	VERTICAL SIDE WALLS	8 1/16"
11	2	NO. 4	2'-7 1/2"	VERTICAL SIDE WALLS	8 1/16"
12	2	NO. 4	2'-8 1/2"	VERTICAL SIDE WALLS	8 1/16"
13	2	NO. 4	2'-9 3/4"	VERTICAL SIDE WALLS	8 1/16"
1	2	NO. 4	9'-5 1/2"	LONGITUDINAL SIDE WALL	7" CC
2	2	NO. 4	9'-5 1/2"	LONGITUDINAL SIDE WALL	7" CC
3	2	NO. 4	8'-1"	LONGITUDINAL SIDE WALL	7" CC
4	2	NO. 4	6'-4 3/4"	LONGITUDINAL SIDE WALL	7" CC
5	2	NO. 4	3'-10 1/2"	LONGITUDINAL SIDE WALLS	7" CC
	7	NO. 4	0'-8 1/2"	VERTICAL END WALLS (BACK)	6" CC
	2	NO. 4	3'-1/4'	TRANSVERSE END WALLS (BACK)	7" CC
1	1	NO. 4	2'-11"	VERTICAL END WALLS (FRONT)	6" CC
2	1	NO. 4	1'-6 1/2"	VERTICAL END WALLS (FRONT)	6" CC
3	1	NO. 4	1'-1 1/2"	VERTICAL END WALLS (FRONT)	6" CC
4	1	NO. 4	1'-1 1/2"	VERTICAL END WALLS (FRONT)	6" CC
5	1	NO. 4	1'-6 3/4"	VERTICAL END WALLS (FRONT)	6" CC
6	1	NO. 4	2'-11"	VERTICAL END WALLS (FRONT)	6" CC
7	1	NO. 4	2'-11"	VERTICAL END WALLS (FRONT)	6" CC
8	1	NO. 4	0'-7 1/2"	VERTICAL END WALLS (FRONT)	6" CC
9	1	NO. 4	0'-2 1/2"	VERTICAL END WALLS (FRONT)	6" CC
10	1	NO. 4	0'-2 1/2"	VERTICAL END WALLS (FRONT)	6" CC
11	1	NO. 4	0'-7 1/2"	VERTICAL END WALLS (FRONT)	6" CC
1	2	NO. 4	3'-0"	LONGITUDINAL END WALLS (FRONT)	7" CC
2	1	NO. 4	1'-1/2"	LONGITUDINAL END WALLS (FRONT)	7" CC
3	1	NO. 4	0'-11 1/2"	LONGITUDINAL END WALLS (FRONT)	7" CC
4	1	NO. 4	1'-4 1/2"	LONGITUDINAL END WALLS (FRONT)	7" CC
5	1	NO. 4	3'-0"	LONGITUDINAL END WALLS (FRONT)	7" CC
6	1	NO. 4	3'-0"	LONGITUDINAL END WALLS (FRONT)	7" CC
7	1	NO. 4	0'-10 1/2"	LONGITUDINAL END WALLS (FRONT)	7" CC
8	1	NO. 4	0'-5 1/2"	LONGITUDINAL END WALLS (FRONT)	7" CC
9	1	NO. 4	0'-6 1/2"	LONGITUDINAL END WALLS (FRONT)	7" CC
1	2	NO. 4	3'-0"	LONGITUDINAL CENTER WALL	6" CC
2	2	NO. 4	0'-9"	LONGITUDINAL CENTER WALL	6" CC
3	2	NO. 4	0'-9"	LONGITUDINAL CENTER WALL	6" CC
4	2	NO. 4	0'-9"	LONGITUDINAL CENTER WALL	6" CC
5	2	NO. 4	3'-0"	LONGITUDINAL CENTER WALL	4" CC
6	2	NO. 4	3'-0"	LONGITUDINAL CENTER WALL	3" CC
7	2	NO. 4	3'-0"	LONGITUDINAL CENTER WALL	3" CC
8	2	NO. 4	0'-4 1/2"	LONGITUDINAL CENTER WALL	6" CC
9	2	NO. 4	0'-4 1/2"	LONGITUDINAL CENTER WALL	6" CC
10	2	NO. 4	0'-6 1/2"	LONGITUDINAL CENTER WALL	6" CC
1	2	NO. 4	2'-4 1/2"	VERTICAL CENTER WALL	6" CC
2	2	NO. 4	0'-7"	VERTICAL CENTER WALL	6" CC
3	2	NO. 4	0'-7"	VERTICAL CENTER WALL	6" CC
4	2	NO. 4	0'-7"	VERTICAL CENTER WALL	6" CC
5	2	NO. 4	0'-7"	VERTICAL CENTER WALL	6" CC
6	2	NO. 4	2'-4 1/2"	VERTICAL CENTER WALL	6" CC
7	2	NO. 4	2'-4 1/2"	VERTICAL CENTER WALL	6" CC
10	2	NO. 4	0'-10"	VERTICAL CENTER WALL	6" CC
11	2	NO. 4	0'-3"	VERTICAL CENTER WALL	6" CC
12	2	NO. 4	0'-3"	VERTICAL CENTER WALL	6" CC
13	2	NO. 4	0'-3"	VERTICAL CENTER WALL	6" CC

TOTAL LENGTH 338.19 FT. TOTAL WEIGHT 225.91 LBS.

DESIGN ENGINEER

CITY ENGINEER

CITY OF OMAHA PUBLIC WORKS DEPARTMENT

TYPE "A" DOUBLE INLET

STANDARD PLATE **700-04** SHEET 1/1

ISSUE DATE: ... DECEMBER 10, 2013

L:\Engineering\011010\DOCUMENTS\Standard Plates\ACAD Files from City\REVISED PLATE NUMERS\PLT-700-04.dwg, 3/6/2014 2:23:01 PM, rickk, 1:1.0241, Lamp, Rynearson & Associates

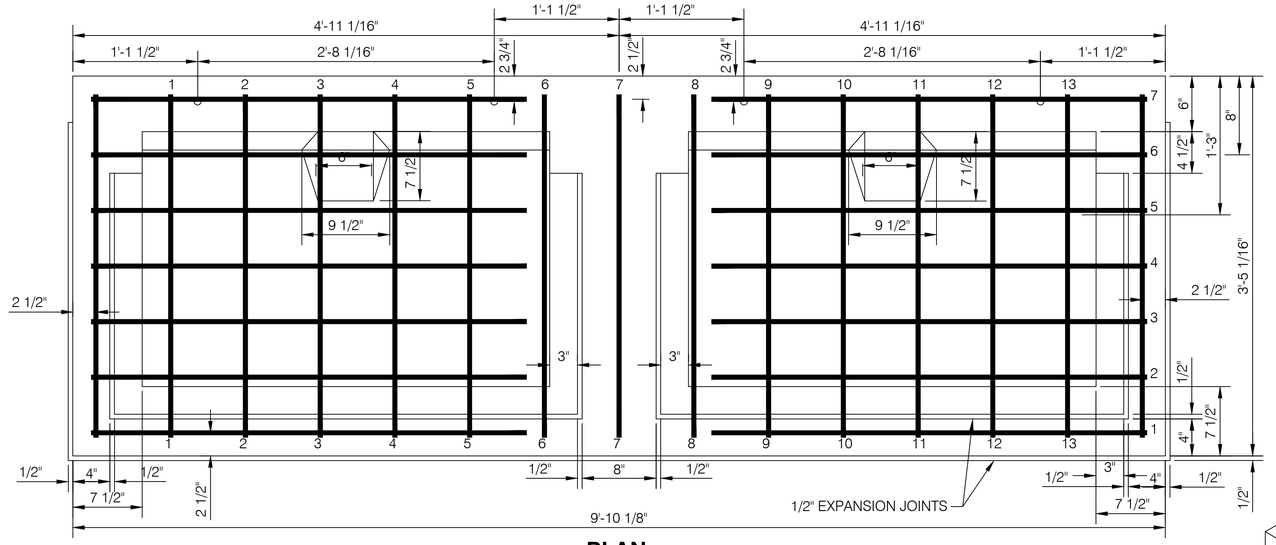

PLAN

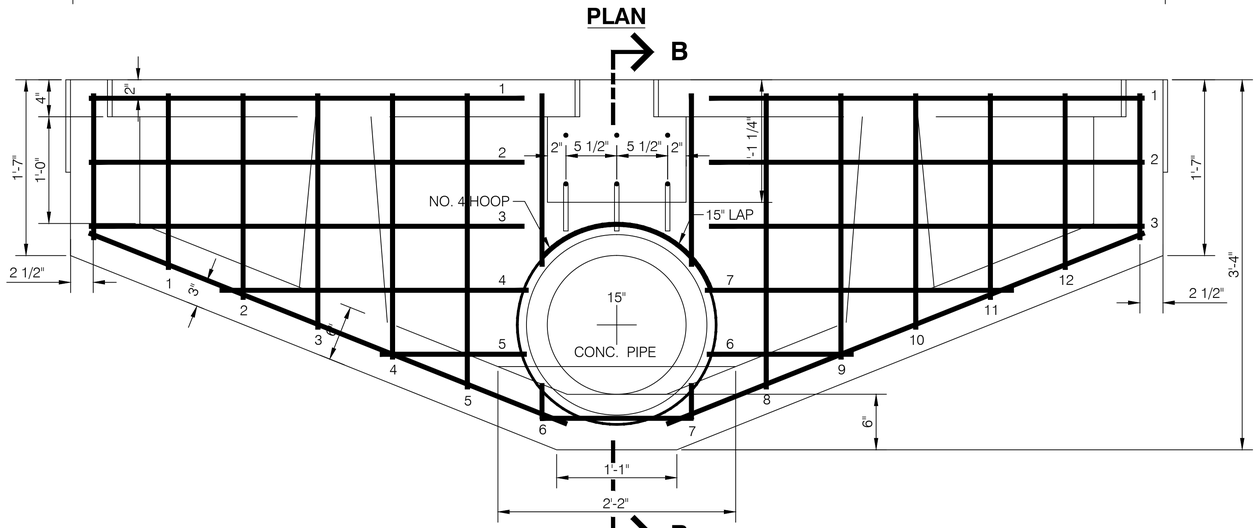

ELEVATION

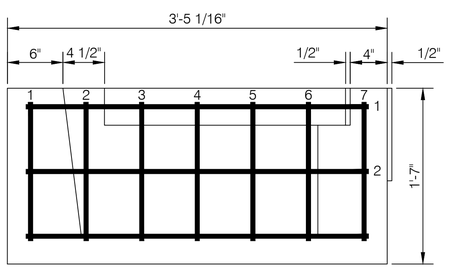

END VIEW

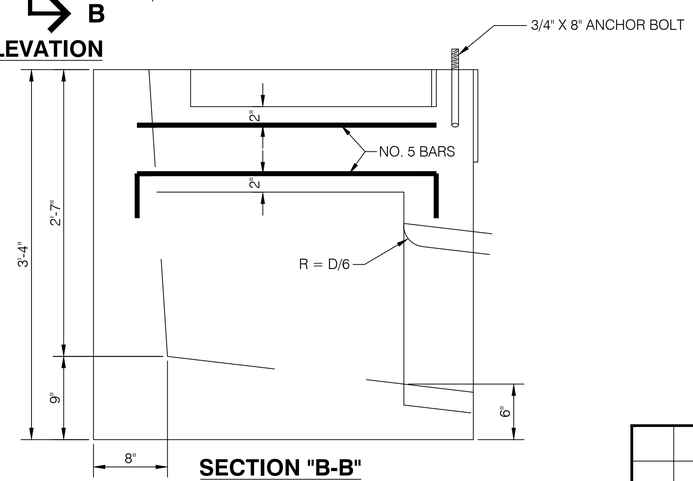

SECTION "B-B"

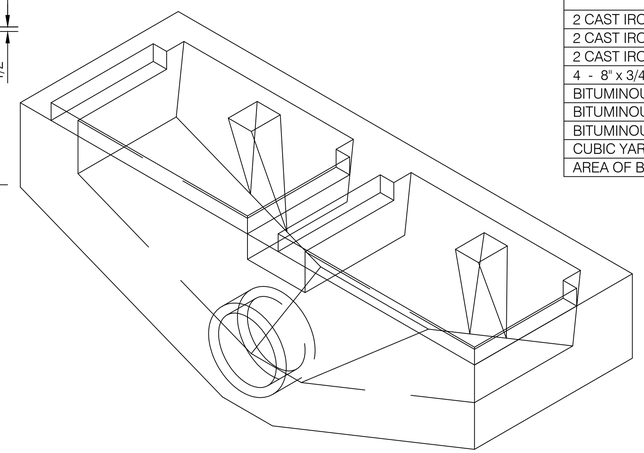

APPROXIMATE QUANTITIES

REINFORCING STEEL

BAR	NO.	SIZE	LENGTH	DESCRIPTION	SPACED
1 - 13	13	NO. 4	3'-1"	TRANSVERSE FOOTING	8 1/16"
1 - 7	7	NO. 4	9'-6"	TRANSVERSE FOOTING	6" CC
1 - 12	2	NO. 4	1'-7"	VERTICAL SIDE WALLS	8" CC
2 - 11	2	NO. 4	1'-11"	VERTICAL SIDE WALLS	8" CC
3 - 10	2	NO. 4	2'-2"	VERTICAL SIDE WALLS	8" CC
4 - 9	2	NO. 4	2'-5"	VERTICAL SIDE WALLS	8" CC
5 - 8	2	NO. 4	2'-8"	VERTICAL SIDE WALLS	8" CC
6 - 7	2	NO. 4	2'-11"	VERTICAL SIDE WALLS	8" CC
13	1	NO. 4	3'-0"	VERTICAL SIDE WALLS	8" CC
	1	NO. 4	HOOP	15" LAP-2" CLEAR OF PIPE	
1 - 3	6	NO. 4	9'-6"	LONGITUDINAL SIDE WALL	7" CC
4	2	NO. 4	7'-0"	LONGITUDINAL SIDE WALL	7" CC
5	2	NO. 4	4'-2"	LONGITUDINAL SIDE WALL	7" CC
1 - 7	14	NO. 4	1'-3"	VERTICAL END WALL	6" CC
1 - 2	4	NO. 4	3'-1"	LONGITUDINAL END WALL	7" CC
	3	NO. 4	2'-9"	BEAM THRU BOX	5 1/2"
	3	NO. 4	3'-9"	BEAM THRU BOX	5 1/2"

TOTAL LENGTH 265.56 FT.
TOTAL WEIGHT 165.14 LBS.

2 CAST IRON GRATE	APPROX. 365 LBS. EA. = 730 LBS.
2 CAST IRON FRAME	APPROX. 292 LBS. EA. = 584 LBS.
2 CAST IRON CURB INLET	APPROX. 290 LBS. EA. = 580 LBS.
4 - 8" x 3/4" ANCHOR BOLTS W/3/4" WASHERS & HEX NUTS	
BITUMINOUS EXP. JT. MATERIAL 1/2" x 10" x 17'-0" (PAVING DEPTH)	
BITUMINOUS EXP. JT. MATERIAL 1/2" x 4" x 17'-6" (FRAME DEPTH)	
BITUMINOUS EXP. JT. MATERIAL 1/2" x 8" x 0'-11" (CURB DEPTH)	
CUBIC YARDS CONCRETE	2.07 C.Y.
AREA OF BLOCK-OUT (EXISTING PAVEMENT ONLY)	6.8 S.Y.

NOTES

1. CONCRETE SHALL BE CLASS L65M.
2. REINFORCING STEEL SHALL BE DEFORMED BARS IN ACCORDANCE WITH ASTM A615 GRADE 60.
3. REINFORCING BARS WILL BE TIE WIRED AT ALL POINTS OF INTERSECTION
4. STANDARD DRAWING OF CAST IRON CURB INLET AND FLAT GRATE AND FRAME. SEE STANDARD PLATE NO. 700-92.
5. REINFORCING SHALL BE PLACED WITH A TOLERANCE OF -1/4" AND +1/2" ON CLEARANCE.

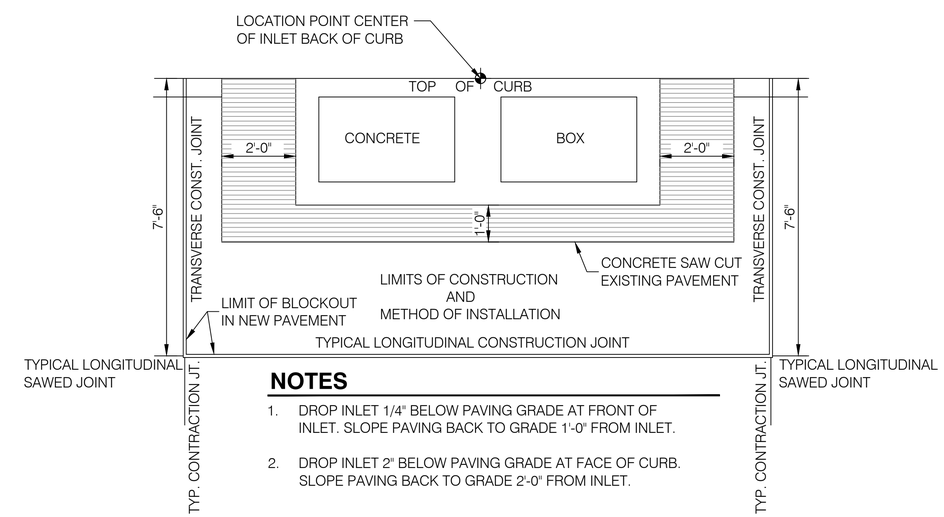

NOTES

1. DROP INLET 1/4" BELOW PAVING GRADE AT FRONT OF INLET. SLOPE PAVING BACK TO GRADE 1'-0" FROM INLET.
2. DROP INLET 2" BELOW PAVING GRADE AT FACE OF CURB. SLOPE PAVING BACK TO GRADE 2'-0" FROM INLET.

DESIGN ENGINEER	CITY OF OMAHA PUBLIC WORKS DEPARTMENT	
	TYPE "A" DOUBLE INLET (ALTERNATE)	STANDARD PLATE 700-05 — SHEET 1/1
CITY ENGINEER		ISSUE DATE: ... DECEMBER 10, 2013

L:\Engineering\01101\DOCUMENTS\Standard Plates\CAD Files from City\REVISED PLATE NUMERS\PL1-700-05.dwg, 3/6/2014 2:24:01 PM, rick, 1:1.0241, Lump, Rynearson & Associates

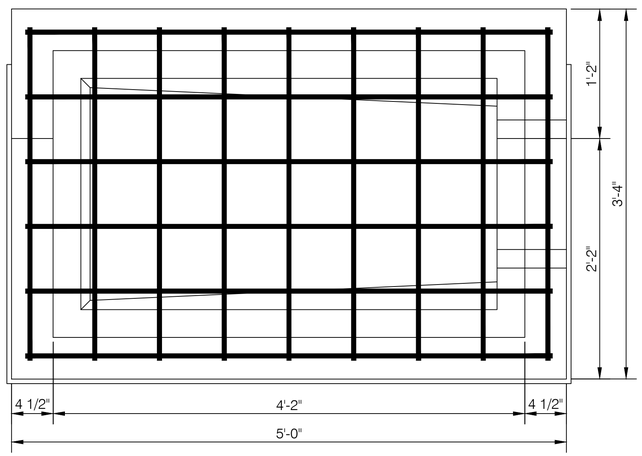

TOP VIEW

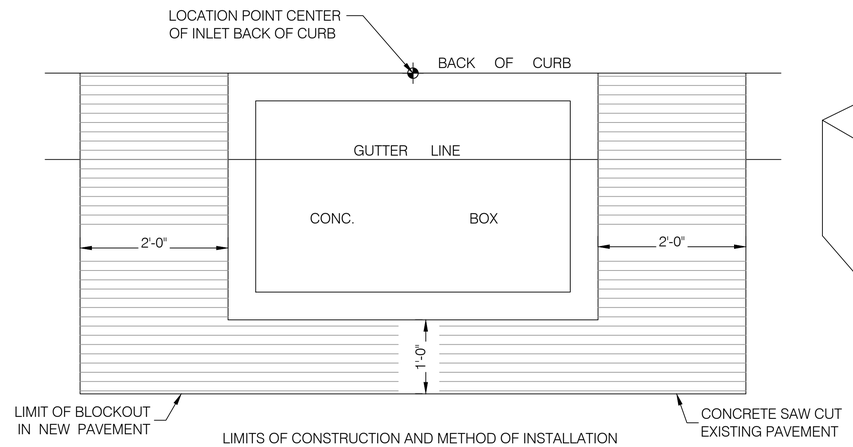

NOTES

1. DROP INLET 1/4" BELOW PAVING GRADE AT FRONT OF INLET. SLOPE PAVING BACK TO GRADE 1'-0" FROM INLET.
2. DROP INLET 1" BELOW PAVING GRADE AT GUTTER LINE. SLOPE PAVING BACK TO GRADE 2'-0" FROM INLET.
3. WITHIN THE LIMITS SHOWN, CONSTRUCT OR REMOVE AND REPLACE PAVEMENT TO BE INCLUDED IN THE COST OF THE INLET.

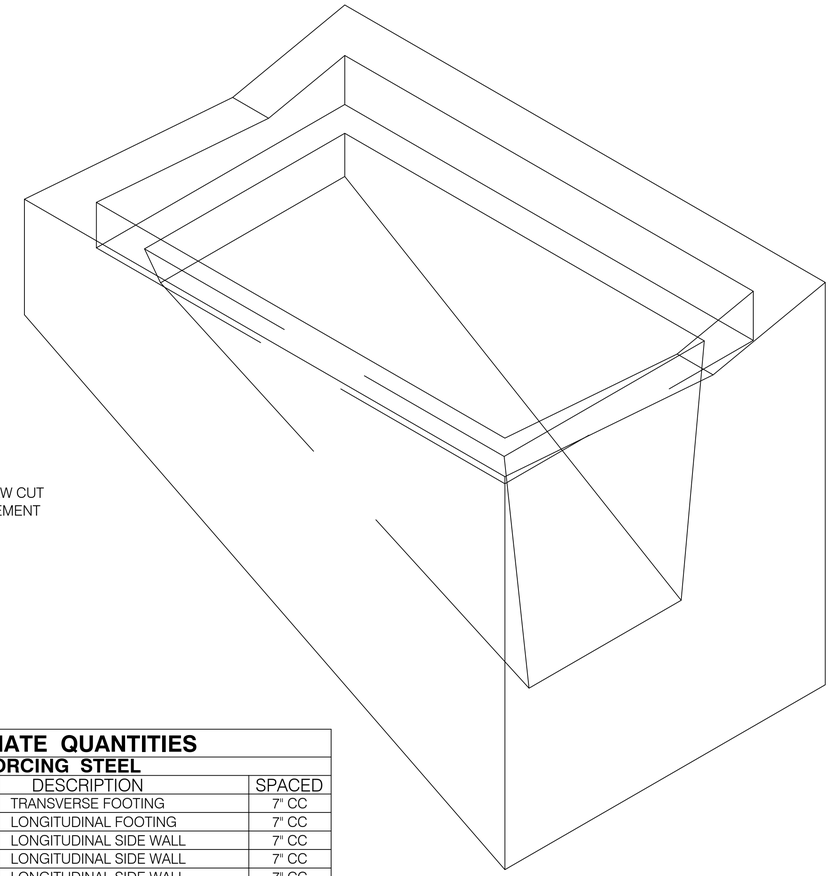

ISOMETRIC DETAIL

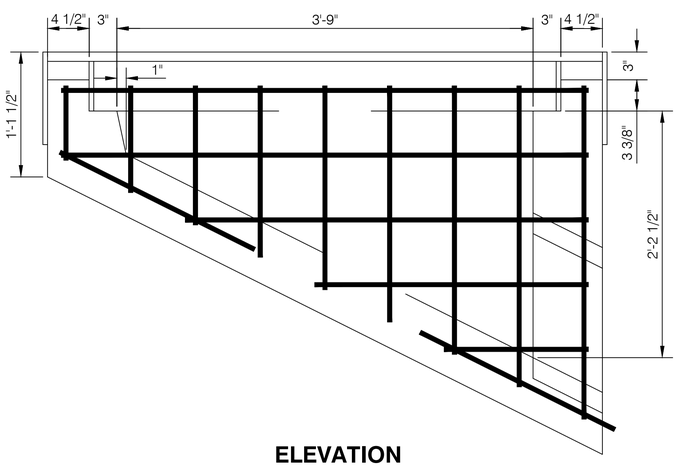

ELEVATION

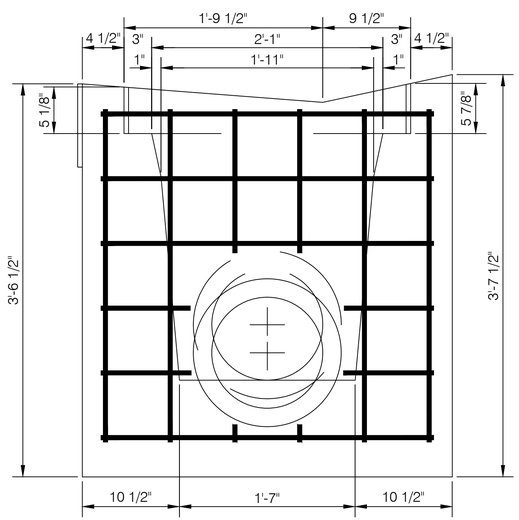

FRONT VIEW

APPROXIMATE QUANTITIES

REINFORCING STEEL

BAR	NO.	SIZE	LENGTH	DESCRIPTION	SPACED
1 to 9	9	NO. 4	3'-0"	TRANSVERSE FOOTING	7" CC
1 to 6	6	NO. 4	5'-3"	LONGITUDINAL FOOTING	7" CC
1	2	NO. 4	4'-8"	LONGITUDINAL SIDE WALL	7" CC
2	2	NO. 4	4'-7"	LONGITUDINAL SIDE WALL	7" CC
3	2	NO. 4	3'-6"	LONGITUDINAL SIDE WALL	7" CC
4	2	NO. 4	2'-3"	LONGITUDINAL SIDE WALL	7" CC
5	2	NO. 4	1'-1"	LONGITUDINAL SIDE WALL	7" CC
1	2	NO. 4	11"	VERTICAL SIDE WALL	7" CC
2	2	NO. 4	1'-2"	VERTICAL SIDE WALL	7" CC
3	2	NO. 4	1'-5"	VERTICAL SIDE WALL	7" CC
4	2	NO. 4	1'-9"	VERTICAL SIDE WALL	7" CC
5	2	NO. 4	2'-0"	VERTICAL SIDE WALL	7" CC
6	1	NO. 4	2'-4"	VERTICAL SIDE WALL	7" CC
7	1	NO. 4	2'-8"	VERTICAL SIDE WALL	7" CC
1 to 3	1	NO. 4	3'-0"	LONGITUDINAL END WALL (FRONT)	7" CC
4	1	NO. 4	11"	LONGITUDINAL END WALL (FRONT)	7" CC
5	1	NO. 4	11"	LONGITUDINAL END WALL (FRONT)	7" CC
1 to 2	1	NO. 4	2'-11"	VERTICAL END WALL (FRONT)	7" CC
3	1	NO. 4	1'-6"	VERTICAL END WALL (FRONT)	7" CC
4	1	NO. 4	1'-6"	VERTICAL END WALL (FRONT)	7" CC
5 to 6	1	NO. 4	2'-11"	VERTICAL END WALL (FRONT)	7" CC
1	1	NO. 4	3'-0"	LONGITUDINAL END WALL (REAR)	7" CC
1 to 6	1	NO. 4	7"	VERTICAL END WALL (REAR)	7" CC

TOTAL LENGTH 150 FT.
TOTAL WEIGHT 100 LBS.

1 CAST IRON TYPE SADDLE CREEK GRATE	APPROX. 340 LBS.
1 CAST IRON TYPE SADDLE CREEK FRAME	APPROX. 390 LBS.
BITUMINOUS EXP. JT. MATERIAL 1/2" x 9" x 10'-4" (PAVING DEPTH)	
BITUMINOUS EXP. JT. MATERIAL 1/2" x 6" x 13'-8" (FRAME DEPTH)	
CUBIC YARDS CONCRETE	.92 C.Y.
AREA OF BLOCKOUT (EXISTING PAVEMENT ONLY)	4.33 S.Y.

NOTES

1. CONCRETE SHALL BE CLASS L65M.
2. REINFORCING STEEL SHALL BE DEFORMED BARS IN ACCORDNACE WITH ASTM A615 GRADE 60.
3. REINFORCING BARS WILL BE TIE WIRED AT ALL POINTS OF INTERSECTION
4. STANDARD DRAWING OF CAST IRON TYPE SADDLE CREEK GRATE AND FRAME. SEE STANDARD PLATE NO. 700-94.
5. INLET PIPE MAY BE INSTALLED AT END OR EITHER SIDE.
6. REINFORCING SHALL BE PLACED WITH A TOLERANCE OF -1/4" AND +1/2" ON CLEARANCE.

DESIGN ENGINEER

CITY ENGINEER

CITY OF OMAHA PUBLIC WORKS DEPARTMENT

TYPE "SADDLE CREEK" SINGLE INLET

STANDARD PLATE **700-07** SHEET 1/1

ISSUE DATE: ... DECEMBER 10, 2013

L:\Engineering\011010\DOCUMENTS\Standard Plates\CAD Files from City\REVISED PLATE NUMERS\PL-T-700-07.dwg, 3/6/2014 2:27:20 PM, rickk, 1:1.0241, Lamp, Rynearson & Associates

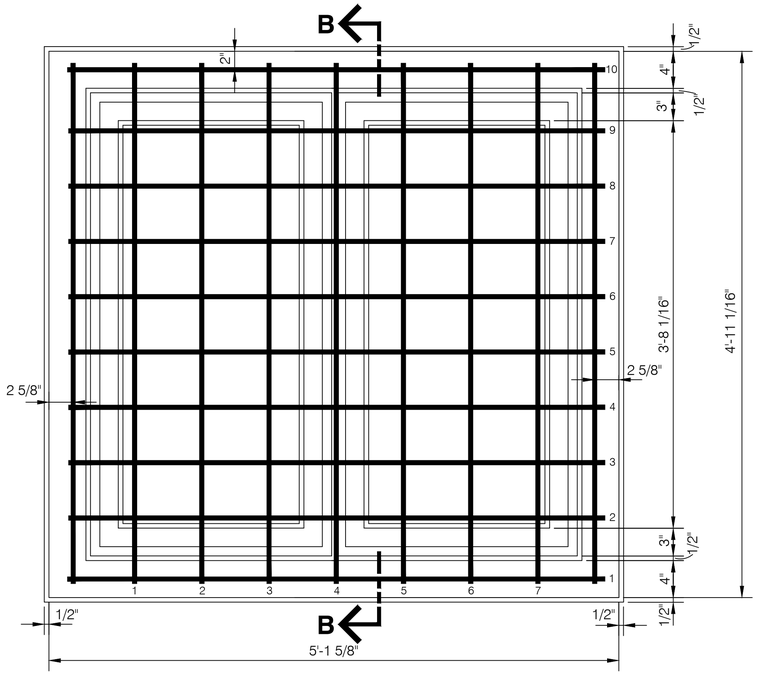

PLAN

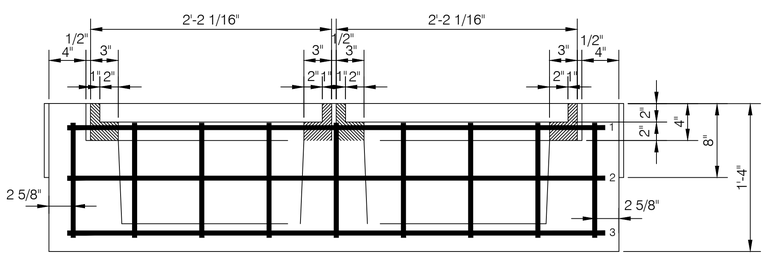

END VIEW

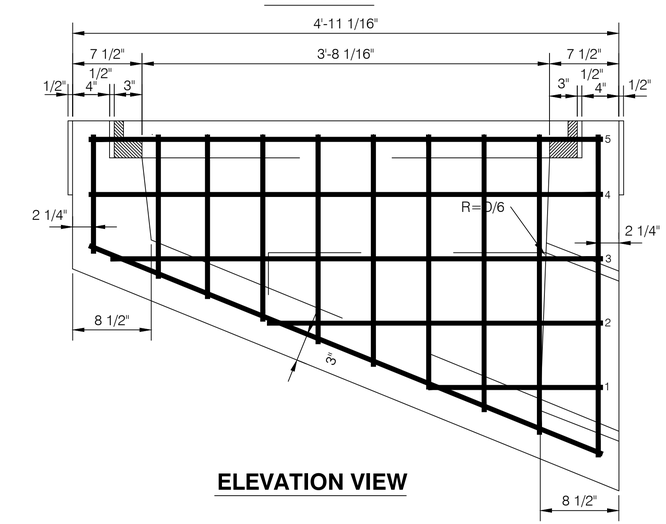

ELEVATION VIEW

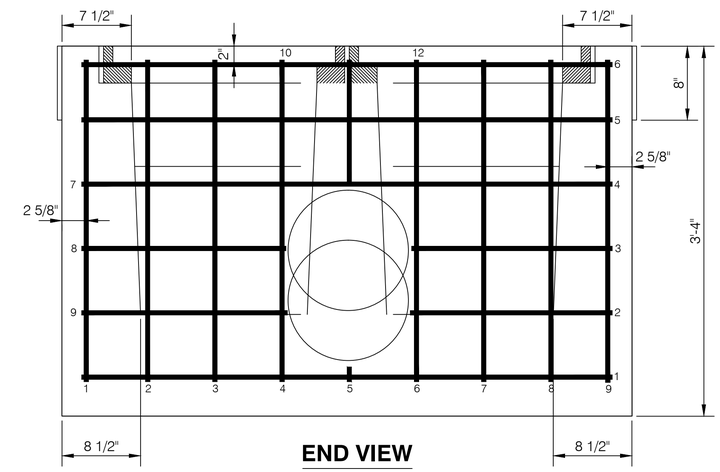

END VIEW

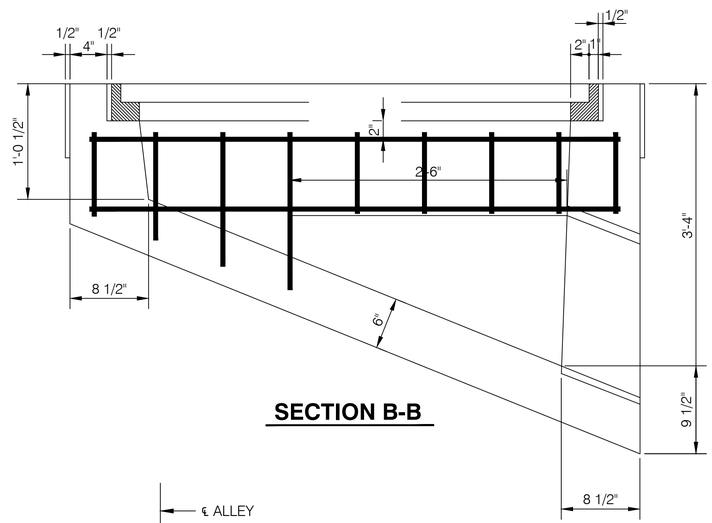

SECTION B-B

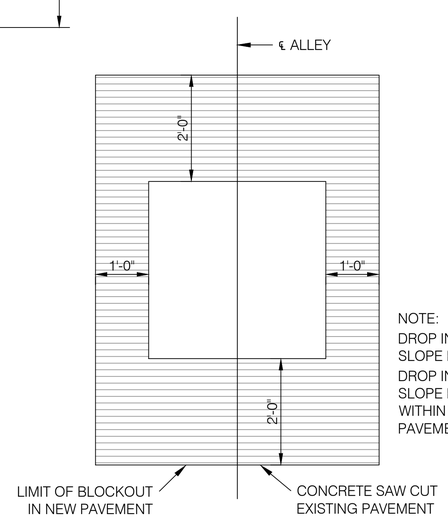

LIMITS OF CONSTRUCTION AND METHOD OF INSTALLATION

NOTE:
DROP INLET $\frac{1}{4}$" BELOW PAVING GRADE AT THE CORNERS OF THE INLET.
SLOPE PAVING BACK TO GRADE 1'-0" FROM INLET.
DROP INLET $\frac{3}{4}$" BELOW PAVING GRADE AT CENTERLINE OF ALLEY.
SLOPE PAVING BACK TO GRADE 2/-0" FROM INLET.
WITHIN THE LIMITS SHOWN, CONSTRUCT OR REMOVE AND REPLACE PAVEMENT TO BE INCLUDED IN THE COST OF THE INLET.

QUANTITIES

REINFORCING STEEL

BAR	NO.	SIZE	LENGTH	DESCRIPTION	SPACED
1-7	7	NO.4Ø	2'-9"	TRANSVERSE FOOTING	7 1/8" CC
1-10	10	NO.4Ø	4'-10"	TRANSVERSE FOOTING	6 1/8" CC
1	2	NO.4Ø	1'-3"	VERTICAL SIDE WALL	6" CC
2	2	NO.4Ø	1"-5"	VERTICAL SIDE WALL	6" CC
3	2	NO.4Ø	1'-9"	VERTICAL SIDE WALL	6" CC
4	2	NO.4Ø	1'-10"	VERTICAL SIDE WALL	6" CC
5	5	NO.4Ø	2'-1"	VERTICAL SIDE WALL	6" CC
6	2	NO.4Ø	2'-4"	VERTICAL SIDE WALL	6" CC
7	2	NO.4Ø	2'-6"	VERTICAL SIDE WALL	6" CC
8	2	NO.4Ø	2'-8"	VERTICAL SIDE WALL	6" CC
1	2	NO.4Ø	1'-4"	LONGITUDINAL SIDE WALL	7 1/8" CC
2	2	NO.4Ø	2'-9"	LONGITUDINAL SIDE WALL	7 1/8" CC
3	2	NO.4Ø	4'-2"	LONGITUDINAL SIDE WALL	7 1/8" CC
4-5	4	NO.4Ø	4'-8"	LONGITUDINAL SIDE WALL	7 1/8" CC
1-9	9	NO.4Ø	1'-0"	VERTICAL END WALL	7 1/8" CC
1-3	3	NO.4Ø	4'-9"	LONGITUDINAL END WALL	5 3/4" CC
1-3	3	NO.4Ø	3'-0"	VERTICAL END WALL	7 1/8" CC
4-6	2	NO.4Ø	0'-6"	VERTICAL END WALL	7 1/8" CC
5	1	NO.4Ø	0'-3"	VERTICAL END WALL	7 1/8" CC
7-8-9	3	NO.4Ø	3'-0"	VERTICAL END WALL	7 1/8" CC
10-12	2	NO.4Ø	1'-4"	VERTICAL END WALL	7 1/8" CC
11	1	NO.4Ø	1'-0"	VERTICAL END WALL	7 1/8" CC
1	1	NO.4Ø	4'-10"	LONGITUDINAL END WALL	7" CC
2-3-9	3	NO.4Ø	1'-8"	LONGITUDINAL END WALL	7" CC
4	1	NO.4Ø	1'-11"	LONGITUDINAL END WALL	7" CC
5-6	2	NO.4Ø	4'-10"	LONGITUDINAL END WALL	7" CC
7	1	NO.4Ø	1'-11"	LONGITUDINAL END WALL	7" CC
8	1	NO.4Ø	1'-7"	LONGITUDINAL END WALL	7" CC
1-2	2	NO.4Ø	4'-9"	LONGITUDINAL END WALL	7" CC
4-8	4	NO.4Ø	0'-9"	VERTICAL CENTER WALL	6" CC
3	1	NO.4Ø	1'-3"	VERTICAL CENTER WALL	6" CC
2	1	NO.4Ø	1'-1"	VERTICAL CENTER WALL	6" CC
1	1	NO.4Ø	0"-11"	VERTICAL CENTER WALL	6" CC
TOTAL WEIGHT					153.37 LBS
TOTAL LENGTH					228.9 FT

2 CAST IRON GRATES	365 LBS. X 2 = 730 LBS.
2 CAST IRON FRAMES	292 LBS. X 2 = 584 LBS.
BITUMINOUS EXPANSION JOINT	1/2" X 4" X 20'-6 3/16"
BITUMINOUS EXPANSION JOINT	1/2" X 6" X 20'-1 5/8" ALLEY
BITUMINOUS EXPANSION JOINT	1/2" X 8" X 20'-1 5/8" STREET
CUBIC YARDS CONCRETE 20 CY	AREA OF BLOCKOUT 62.00 SY

NOTES

1. CONCRETE SHALL BE CLASS L65M.
2. REINFORCING STEEL SHALL BE DEFORMED BARS IN ACCORDANCE WITH ASTM A615 GRADE 60.
3. REINFORCING BARS WILL BE TIE WIRED AT ALL POINTS OF INTERSECTION
4. STANDARD DRAWING OF GRATE AND FRAME SEE STANDARD PLATE NO. 700-92 AND NO. 700-93.
5. INLET PIPE MAY BE INSTALLED AT END OR EITHER SIDE.
6. REINFORCING SHALL BE PLACED WITH A TOLERANCE OF -1/4" AND +1/2" ON CLEARANCE.

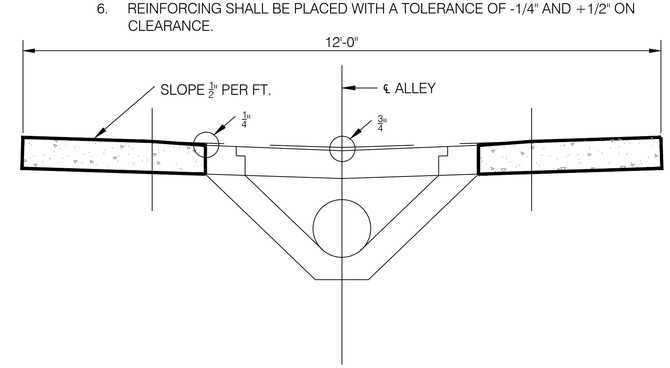

TYPICAL ALLEY SECTION

		DESIGN ENGINEER	CITY OF OMAHA PUBLIC WORKS DEPARTMENT
		CITY ENGINEER	TYPE "C" DOUBLE INLET — STANDARD PLATE 700-10 — SHEET 1/1 — ISSUE DATE: ... DECEMBER 10, 2013

L:\Engineering\01101\DOCUMENTS\Standard Plates\ACAD Files from City\REVISED PLATE NUMERS\PLT-700-10.dwg, 3/6/2014 2:28:51 PM, rckk, 1:1.0241, Lamp, Rynerson & Associates

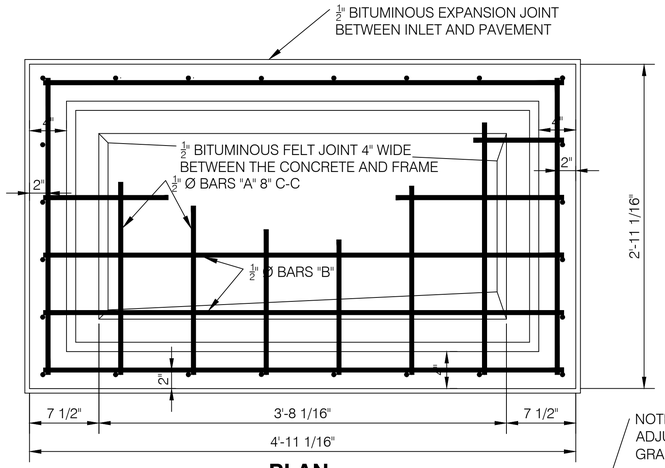

PLAN

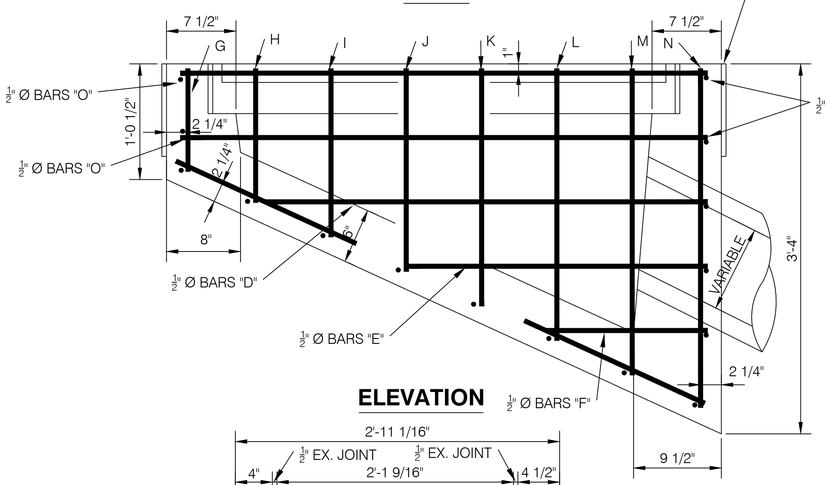

NOTE: TOP OF WALL ADJUSTED TO CROWN AND GRADE OF PAVEMENT

ELEVATION

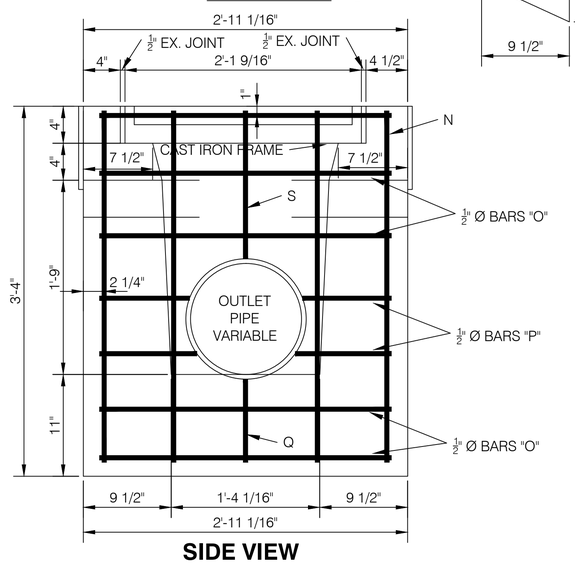

SIDE VIEW

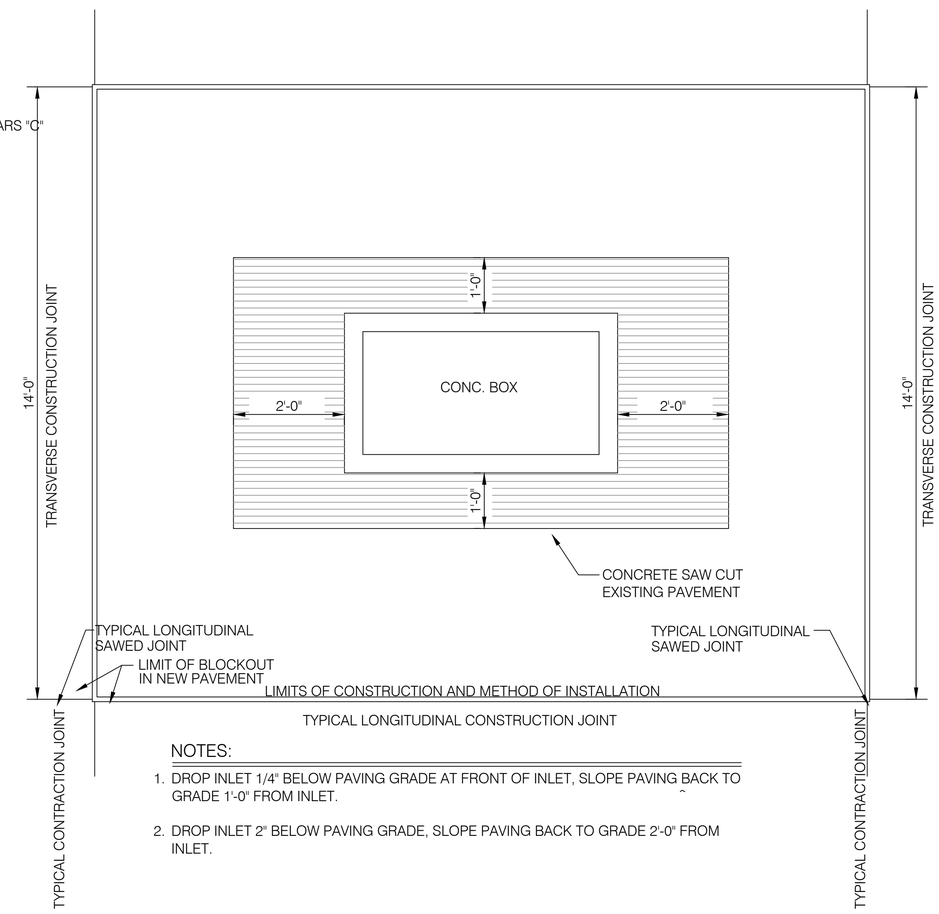

NOTES:

1. DROP INLET 1/4" BELOW PAVING GRADE AT FRONT OF INLET, SLOPE PAVING BACK TO GRADE 1'-0" FROM INLET.
2. DROP INLET 2" BELOW PAVING GRADE, SLOPE PAVING BACK TO GRADE 2'-0" FROM INLET.

QUANTITIES

REINFORCING STEEL

BAR	NO.	SIZE	LENGTH	DESCRIPTION	SPACED
A	8	1/2"Ø	2'-8"	TRANSVERSE FOOTING	8" CC
B	5	1/2"Ø	5'-1"	LONGITUDINAL FOOTING	8" CC
C	4	1/2"Ø	4'-8"	LONGITUDINAL SIDE WALL	8" CC
D	2	1/2"Ø	4'-3"	LONGITUDINAL SIDE WALL	8" CC
E	2	1/2"Ø	3'-0"	LONGITUDINAL SIDE WALL	8" CC
F	2	1/2"Ø	1'-6"	LONGITUDINAL SIDE WALL	8" CC
G	5	1/2"Ø	0'-11"	VERTICAL END WALL	8" CC
H	2	1/2"Ø	1'-2"	VERTICAL SIDE WALL	8" CC
I	2	1/2"Ø	1'-5"	VERTICAL SIDE WALL	8" CC
J	2	1/2"Ø	1'-8"	VERTICAL SIDE WALL	8" CC
K	2	1/2"Ø	1'-11"	VERTICAL SIDE WALL	8" CC
L	2	1/2"Ø	2'-2"	VERTICAL SIDE WALL	8" CC
M	2	1/2"Ø	2'-5"	VERTICAL SIDE WALL	8" CC
N	4	1/2"Ø	2'-8"	VERTICAL SIDE WALL & END WALL	8" CC
O&O	5	1/2"Ø	2'-8"	LONGITUDINAL END WALL	8" CC
P	4	1/2"Ø	0'-8"	LONGITUDINAL END WALL	8" CC
Q	1	1/2"Ø	0'-8"	LONGITUDINAL END WALL	8" CC
R	1	1/2"Ø	0'-9"	LONGITUDINAL END WALL	8" CC
S	1	1/2"Ø	1'-0"	VERTICAL END WALL	8" CC
T	1	1/2"Ø	1'-2"	VERTICAL END WALL	8" CC
TOTAL WEIGHT OF 1/2" Ø BARS					92.9 LBS

CAST IRON GRATE	APPROX. 340 LBS.
CAST IRON FRAME	APPROX. 390 LBS.
1/2" BITUMINOUS EXPANSION JOINT MATERIAL 4" WIDE LIN. FT. 13'-0"	
1/2" BITUMINOUS EXPANSION JOINT MATERIAL 8" WIDE LIN. FT. 15'-0"	
CUBIC YARDS CONCRETE	.62 C.Y.

NOTES

1. CONCRETE SHALL BE CLASS L65M.
2. REINFORCING STEEL SHALL BE DEFORMED BARS IN ACCORDANCE WITH ASTM A615 GRADE 60.
3. REINFORCING BARS WILL BE TIE WIRED AT ALL POINTS OF INTERSECTION
4. STANDARD DRAWING OF GRATE AND FRAME SEE STANDARD PLATE NO. 700-92 AND NO. 700-93.
5. INLET PIPE MAY BE INSTALLED AT END OR EITHER SIDE.
6. REINFORCING SHALL BE PLACED WITH A TOLERANCE OF -1/4" AND +1/2" ON CLEARANCE.

DESIGN ENGINEER

CITY ENGINEER

CITY OF OMAHA PUBLIC WORKS DEPARTMENT

TYPE "B-B" SINGLE BASIN GRATE INLET

STANDARD PLATE **700-12** SHEET 1/1

ISSUE DATE: ... DECEMBER 10, 2013

L:\Engineering\011\0\DOCUMENTS\Standard Plates\ACAD Files from City\REVISED PLATE NUMERS\PLT-700-12.dwg, 3/6/2014 2:29:48 PM, rick, 1:1.0241, Lamp, Rynearson & Associates

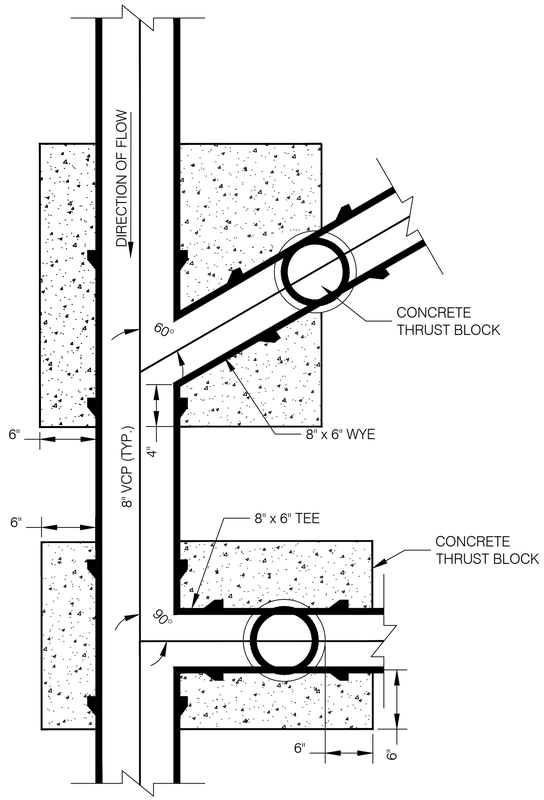

PLAN

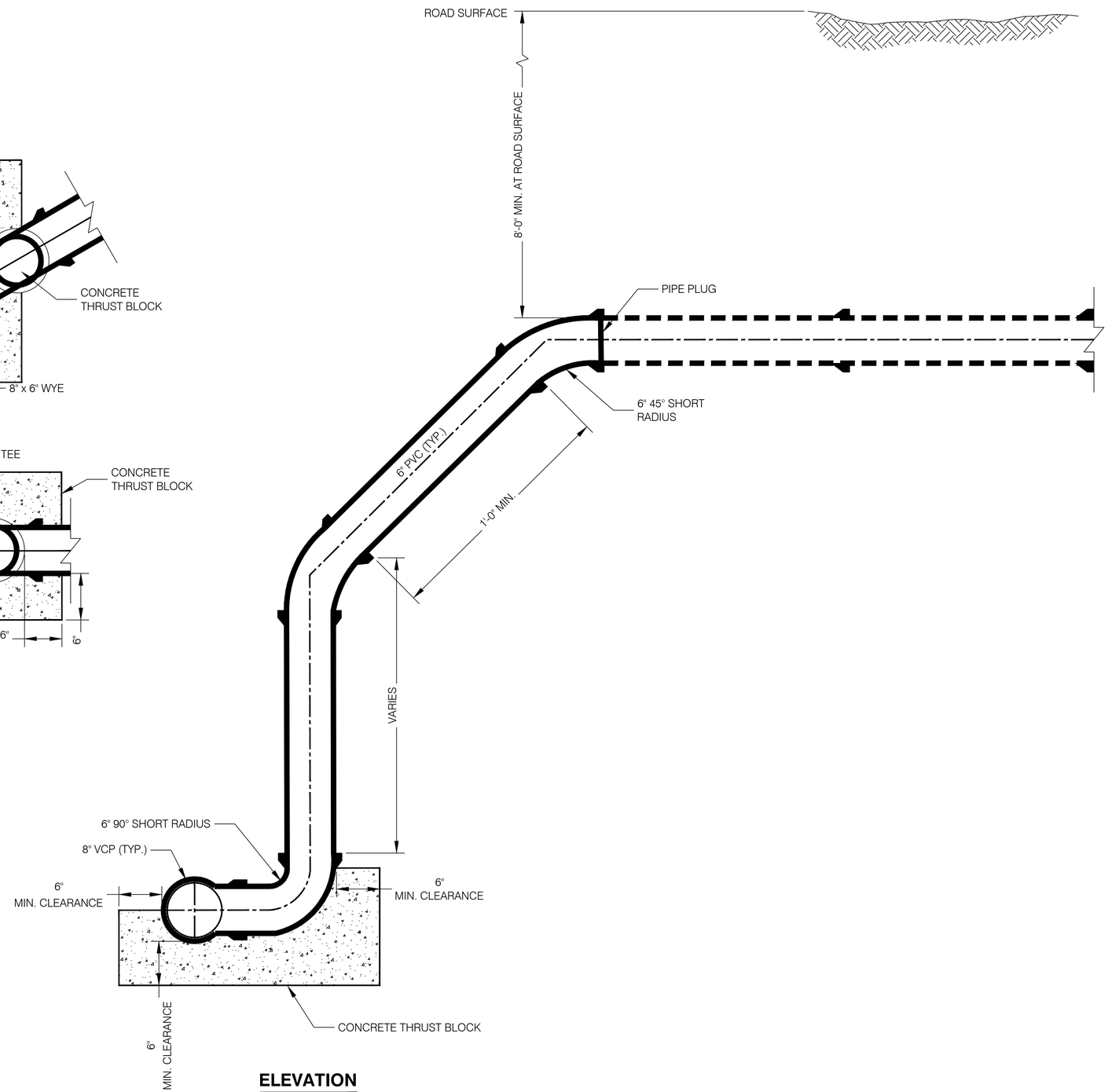

ELEVATION

WYE OR TEE

		DESIGN ENGINEER	CITY OF OMAHA PUBLIC WORKS DEPARTMENT
		CITY ENGINEER	**SANITARY SERVICE RISER**

STANDARD PLATE **700-15** SHEET 1/1

ISSUE DATE: ..... DECEMBER 10, 2013

L:\Engineering\01\10\DOCUMENTS\Standard Plates\ACAD Files from City\REVISED PLATE NUMBERS\PLT-700-15.dwg, 2/18/2014 2:59:46 PM, rkdk, 1:1.03774, Lamp, Rynearson & Associates

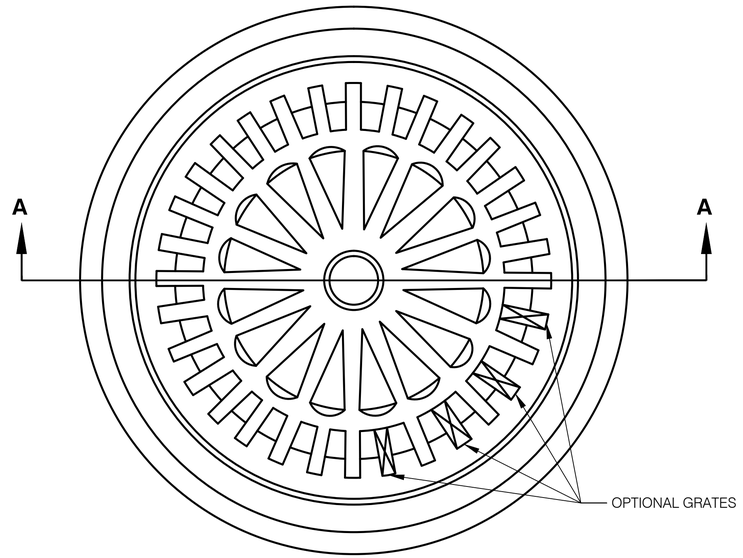

APPROXIMATE WEIGHT = 160 LBS.

TOP VIEW

NO SCALE

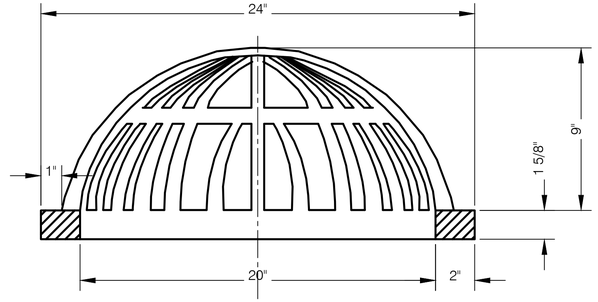

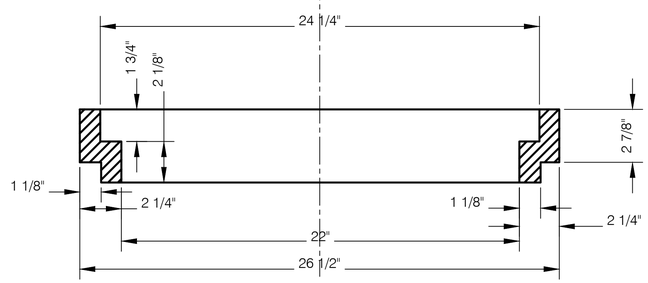

SECTION A-A

NO SCALE

NOTES

1. STANDARD DRAWING OF CAST IRON FLAT GRATE AND FRAME. SEE STANDARD PLATE 700-92

		DESIGN ENGINEER	CITY OF OMAHA PUBLIC WORKS DEPARTMENT
		CITY ENGINEER	RING AND BEEHIVE GRATE — STANDARD PLATE 700-16 — SHEET 1/1 — ISSUE DATE: ..... DECEMBER 10, 2013

L:\Engineering\011010\DOCUMENTS\Standard Plates\ACAD Files from City\REVISED PLATE NUMERS\PLT-700-16.dwg, 2/18/2014 3:02:25 PM, rstik, 1:1.03774, Lamp, Rynearson & Associates

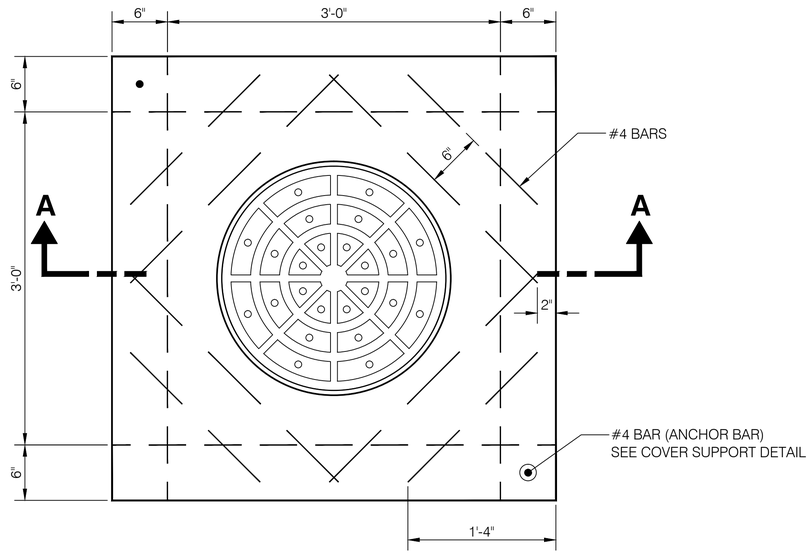

PLAN VIEW

SCALE : 1 1/2" = 1'-0"

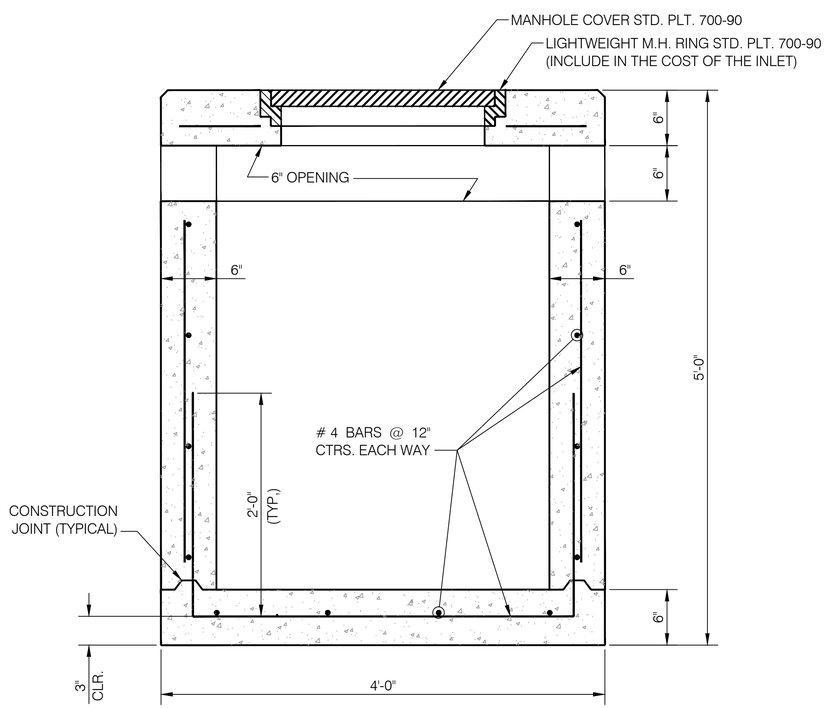

SECTION A-A

SCALE : 1 1/2" = 1'-0"

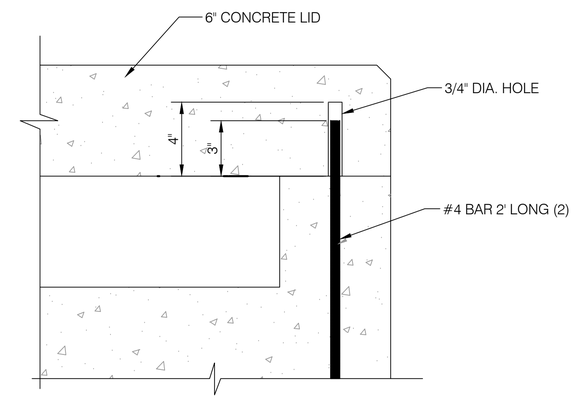

COVER SUPPORT DETAIL

SCALE : 1 1/2" = 1'-0"

NOTES

1. LEAD PIPE - ANY SIZE UP TO 30" MAY BE INSTALLED IN ANY WALL.
2. OPENINGS - NUMBER & LOCATION TO FIT FIELD CONDITIONS.
3. ALL EXPOSED EDGES OF BOX TO BE CAMFERED.
4. ALL REINFORCING STEEL SHALL CLEAR ALL SURFACES BY 2".
5. CONCRETE SHALL BE CLASS L65M.
6. REINFORCING STEEL SHALL BE DEFORMED BARS IN ACCORDANCE WITH ASTM A615 GRADE 60.
7. REINFORCING SHALL BE PLACED WITH A TOLERANCE OF -1/4" AND +1/2" ON CLEARANCE.

		DESIGN ENGINEER	CITY OF OMAHA PUBLIC WORKS DEPARTMENT
		CITY ENGINEER	AREA INLETS TYPE 1
			STANDARD PLATE 700-17 — SHEET 1/2
			ISSUE DATE: ... DECEMBER 10, 2013

L:\Engineering\01101\02\DOCUMENTS\Standard Plates\ACAD Files from City\REVISED PLATE NUMBERS\PL-T-700-17 (1).dwg, 3/6/2014 2:37:00 PM, rickk, 1:1.0241, Lump, Rynearson & Associates

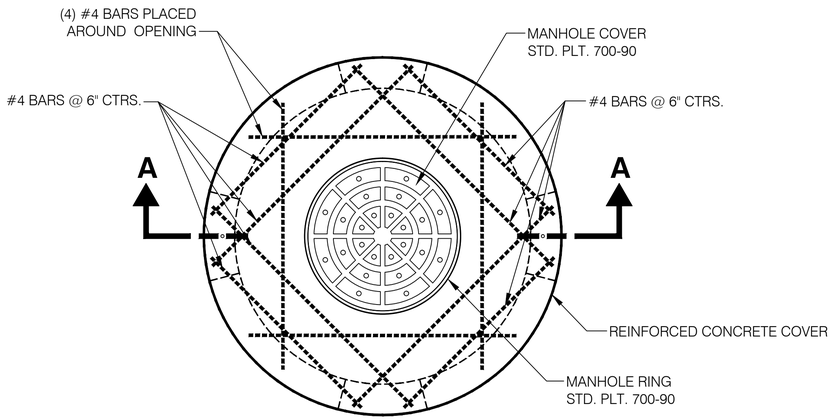

PLAN VIEW

SCALE : 1" = 1'-0"

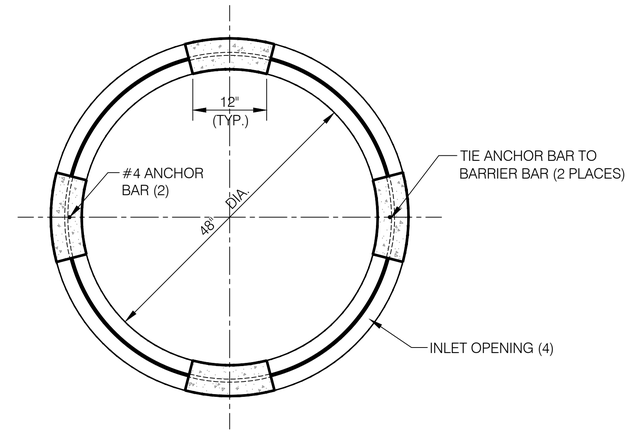

SECTION B-B

SCALE : 1" = 1'-0"

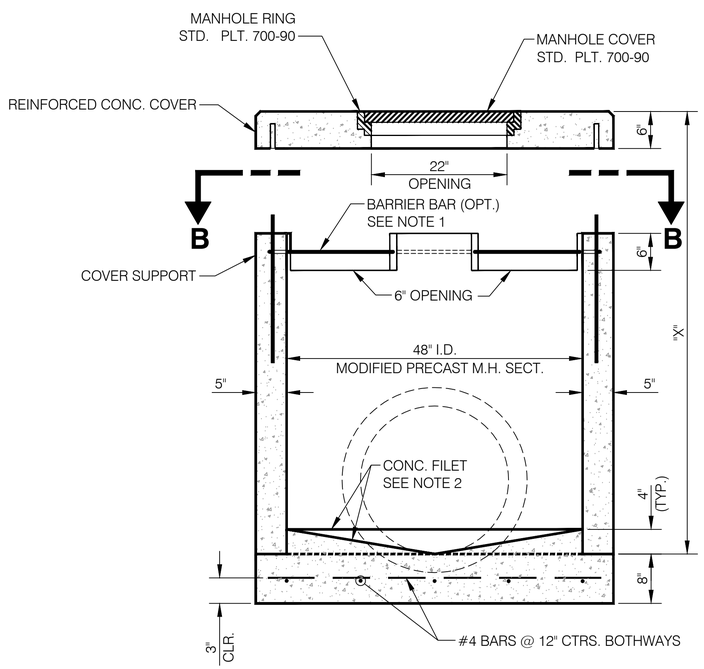

SECTION A-A

SCALE : 1" = 1'-0"

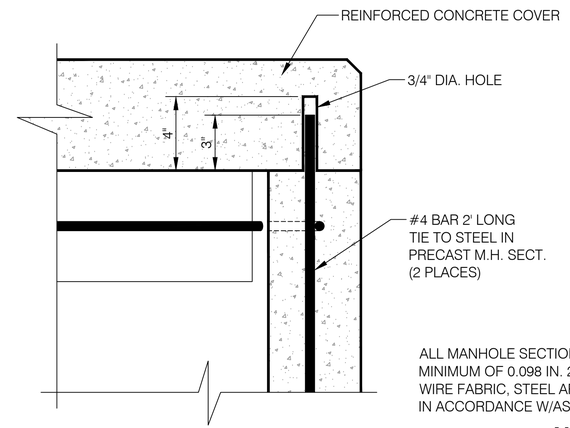

COVER SUPPORT DETAIL

SCALE : 3" = 1'-0"

ALL MANHOLE SECTIONS ARE REINFORCED WITH A MINIMUM OF 0.098 IN. 2/VERT. FT. W/WELDED STEEL WIRE FABRIC, STEEL AREAS WILL ALSO BE FURNISHED IN ACCORDANCE W/ASTM C478 WHEN SPECIFIED.

NOTES

1. BARRIER BAR SHALL BE #4 SMOOTH BAR COMPLYING W/ASTM A36, FULLY GALVANIZED IN ACCORDANCE W/ASTM A123.
2. WHERE TWO LEAD PIPES ARE USED, FILET SHALL BE BROUGHT UP TO SPRING LINE OF LARGER PIPE.
3. ALL REINFORCING STEEL SHALL CLEAR ALL SURFACES BY 2".
4. ALL EXPOSED EDGES OF AREA INLET SHALL BE CHAMFERED.
5. CONCRETE SHALL BE CLASS L65M.
6. REINFORCING STEEL SHALL BE DEFORMED BARS IN ACCORDANCE WITH ASTM A615 GRADE 60.
7. REINFORCING SHALL BE PLACED WITH A TOLERANCE OF -1/4" AND +1/2" ON CLEARANCE.

		DESIGN ENGINEER	CITY OF OMAHA PUBLIC WORKS DEPARTMENT
		CITY ENGINEER	AREA INLETS TYPE 2
			STANDARD PLATE **700-17** SHEET 2/2
			ISSUE DATE: ... DECEMBER 10, 2013

L:\Engineering\011\0210\DOCUMENTS\Standard Plates\ACAD Files from City\REVISED PLATE NUMERS\PLT-700-17 (2).dwg, 3/6/2014 2:38:31 PM, rcbk, 1:1.0241, Lamp, Rynearson & Associates

NOTE

HINGED LID TOP SHALL BE CONSTRUCTED WHEN MANHOLE IS LOCATED OUTSIDE PAVEMENT AREA. ALTERNATE TOP SHALL BE CONSTRUCTED WHEN MANHOLE IS LOCATED WITHIN PAVEMENT. SEE SHEET 2.

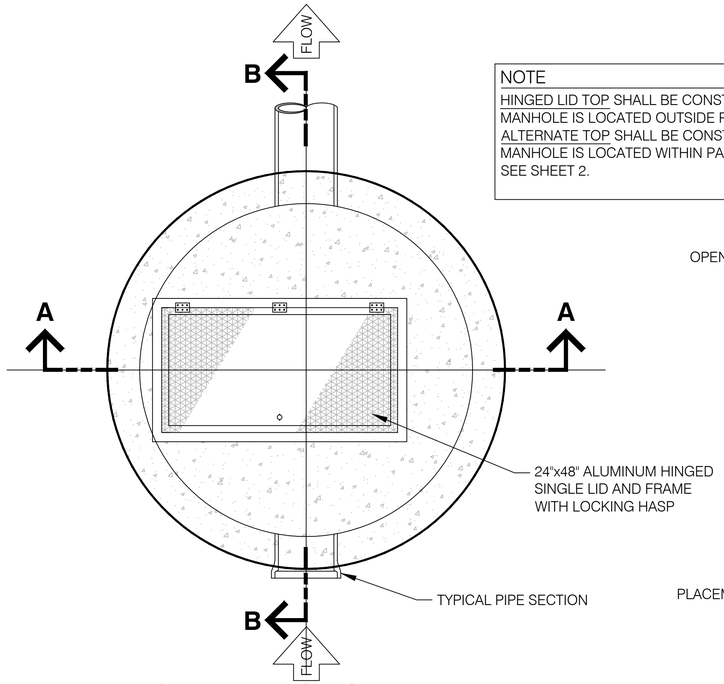

MANHOLE PLAN.....OUTSIDE PAVEMENT

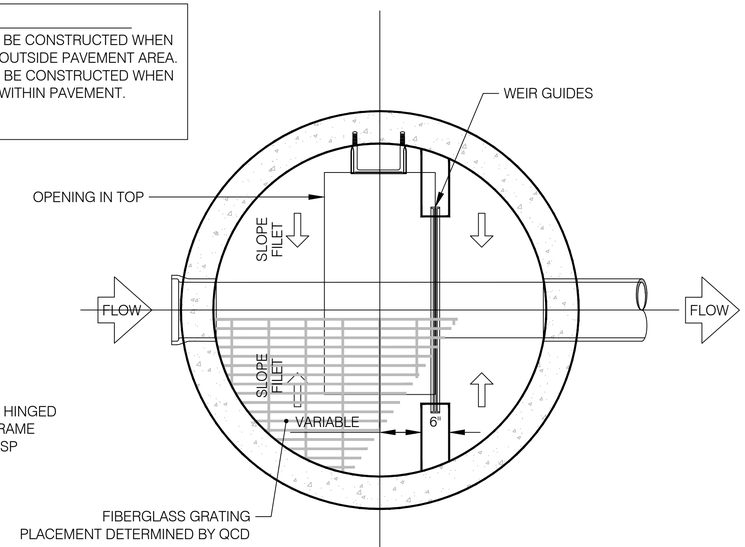

INTERIOR PLAN

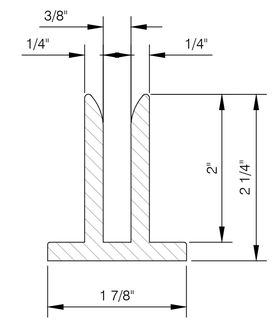

WEIR GUIDE DETAIL

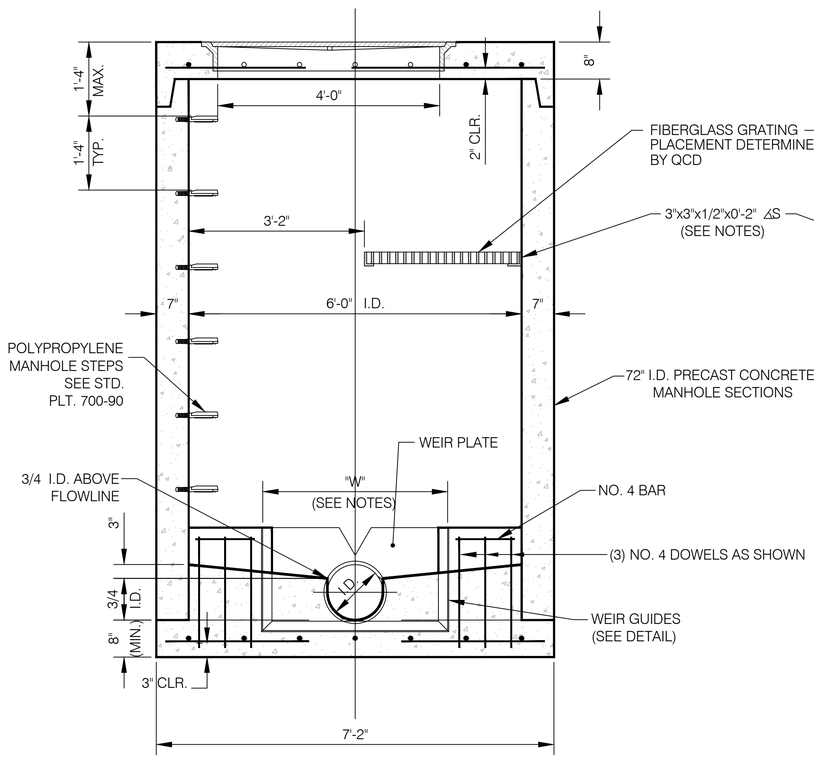

SECTION A-A

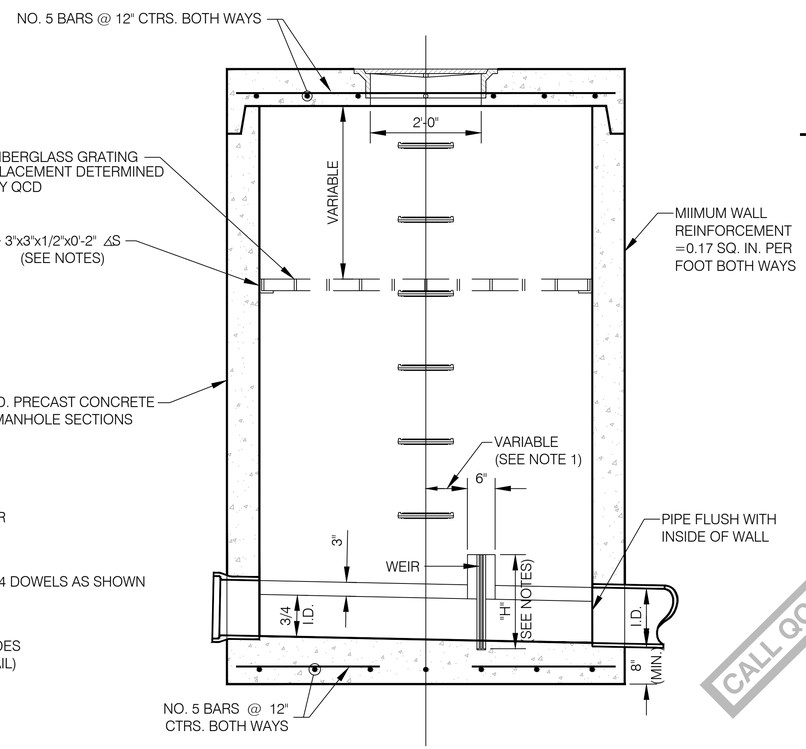

SECTION B-B

CALL QCD BEFORE PROCEDING

NOTES

1. QUALITY CONTROL DIVISION (QCD) MUST VERIFY THE DIMENSIONS AND TOLERANCES OF THE GUIDES AND WEIR PLATE BEFORE INSTALLATION.
2. INDUSTRY SHALL PROVIDE ANTICIPATED MAXIMUM AND MINIMUM FLOW RATES IN GALLONS PER MINUTE (GPM) OR CUBIC FEET PER SECOND (CFS) TO QCD FOR SIZING PURPOSES.
3. QCD MUST INSPECT FORMS BEFORE POURING CONCRETE AND AFTER TO VERIFY PROPER INSTALLATION AND TO ENSURE TOLERANCE ARE WITHIN SPECIFICATION. CONTACT QCD: (402)444-3915 (EXT 135) TO ARRANGE INSPECTIONS.
4. ALL DIMENSIONS SHALL BE PROVIDED BY QCD.
5. WEIR GUIDES AND ¼" WEIR PLATE MUST BE FABRICATED FROM 10 GAUGE TYPE 304 STAINLESS STEEL.
6. ALL DIMENSIONS OF V-NOTCH + OR - 1/64TH INCH.
7. ALL WEIR PLATE SURFACES MUST BE MILLED, LEVEL, AND PLUMB.
8. ENTIRE V-NOTCH MUST HAVE A 60 DEGREE DOWNSTREAM CHAMFERED EDGE (SEE SHEET 3).
9. V-NOTCH MUST COME TO A SHARP DEFINED POINT.
10. WEIR PLATE MUST REST IN WEIR GUIDES LEVEL AND PLUMB.
11. THE UPSTREAM APPROACH PIPE TO THE SMH MUST BE STRAIGHT (NO TIE INS, BENDS OR TURNS). THE MINIMUM LENGTH OF THE APPROACH PIPE SHALL BE EQUAL TO OR GREATER THAN 25 TIMES THE DIAMETER OF THE PIPE.
12. THE UPSTREAM AND DOWNSTREAM PIPE MUST HAVE A UNIFORM SLOPE AND BE DESIGNED SO THE APPROACHING FLOW IS RELATIVELY FREE OF TURBULENCE. PROVIDE QCD WITH % SLOPE FOR APPROVAL. ALL CONCRETE SHALL BE HIGH ALKALINITY, MINIMUM 50% CALCAREOUS AGGREGATE, CLASS L65M, TYPE II CEMENT.
13. THE MINIMUM INSIDE DEPTH OF SAMPLING MANHOLES SHALL BE 4'.
14. HINGED TOP LID SHALL BE CONSTRUCTED WHEN THE SAMPLING MANHOLE IS LOCATED OUTSIDE PAVEMENT AREA. ALTERNATE TOP SHALL BE CONSTRUCTED WHEN SAMPLING MANHOLE IS LOCATED WITHIN PAVEMENT (SEE SHEET 2).
15. THE CONCRETE TOP MAY BE PRECAST OR CAST IN PLACE.
16. STAINLESS STEEL SUPPORT ANGLES FOR GRATING SHALL BE FASTENED TO THE WALLS WITH STAINLESS STEEL CONCRETE ANCHORS.
17. GRATING PLACEMENT TO SMH SHALL BE DETERMINED BY QCD.
18. GRATING AND APPURTENANCES SHALL BE DESIGNED TO CARRY A UNIFORM LIVE LOAD OF 250PSF AND A 500 LB CONCENTRATED LOAD AT THE MIDPOINT.
19. A LAYER OF ALUMILASTIC CONSISTENCY C, C-I, OR K, OR APPROVED EQUAL, SHALL BE PLACED BETWEEN ALUMINUM COMPONENTS AND ALL CONCRETED CONTACT POINTS.
20. PRECAST CONCRETE MANHOLE SHALL BE CONSTRUCTED IN ACCORDANCE WITH THIS STANDARD PLATE AND SANITARY MANHOLE REQUIREMENTS IN SECTION 700 OF THE MOST CURRENT VERSION OF 'THE CITY OF OMAHA STANDARD SPECIFICATIONS FOR PUBLIC WORKS CONSTRUCTION'. JOINTS SHALL BE CONFINED O-RING GASKET CONFORMING TO THE REQUIREMENTS OF ASTM C361.
21. 72" I.D. MANHOLE SHALL BE MANUFACTURED ACCORDING TO A.S.T.M. STANDARD SPECIFICATION C478 EXCEPT AS NOTED. USE 7" WALL THICKNESS.
22. SAMPLING MANHOLES SHALL BE LOCATED SO ACCESS IS AVAILABLE TO SAMPLING CREWS AT ALL TIMES.
23. MANHOLES ON PRIVATE PROPERTY SHALL BE LOCATED SO THEY ARE UNOBSTRUCTED BY PARKED OR MOVING VEHICLES.
24. IF THE FINAL QCD INSPECTION DETERMINES THE METERING DEVICE/PIPING DOES NOT MEET TOLERANCES OR SPECIFICATIONS THE INSTALLATION WILL BE REJECTED.
25. REINFORCING SHALL BE PLACED WITH A TOLERANCE OF -1/4" AND +1/2" ON CLEARANCE.

	DESIGN ENGINEER	CITY OF OMAHA PUBLIC WORKS DEPARTMENT	
	CITY ENGINEER	**SAMPLING MANHOLES** WEIR TYPE	**STANDARD PLATE 700-18** SHEET 1/3
			ISSUE DATE: ... DECEMBER 10, 2013

L:\Engineering\011010\DOCUMENTS\Standard Plates\ACAD Files from City\REVISED PLATE NUMERS\PLT-700-18 (1).dwg, 3/6/2014 2:39:35 PM, rckk, 1:1.0241, Lamp, Rynearson & Associates

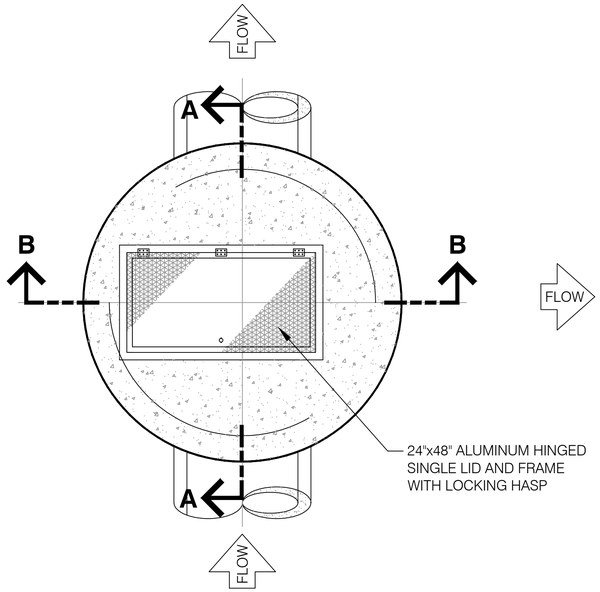

MANHOLE PLAN ..... OUTSIDE PAVEMENT

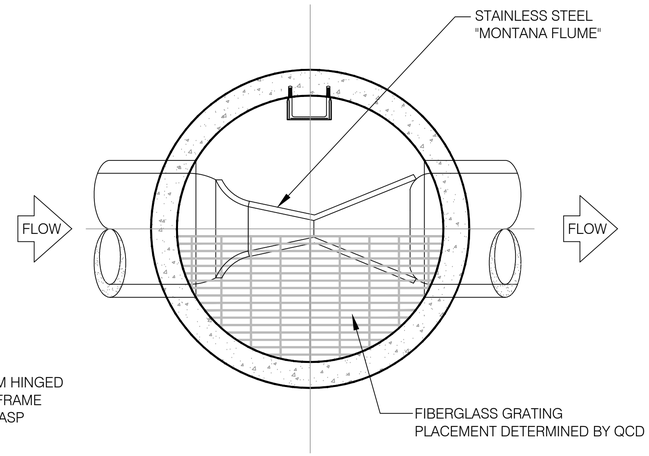

INTERIOR PLAN

NOTE

HINGED LID TOP SHALL BE CONSTRUCTED WHEN MANHOLE IS LOCATED OUTSIDE PAVEMENT AREA.

ALTERNATE TOP SHALL BE CONSTRUCTED WHEN MANHOLE IS LOCATED WITHIN PAVEMENT.

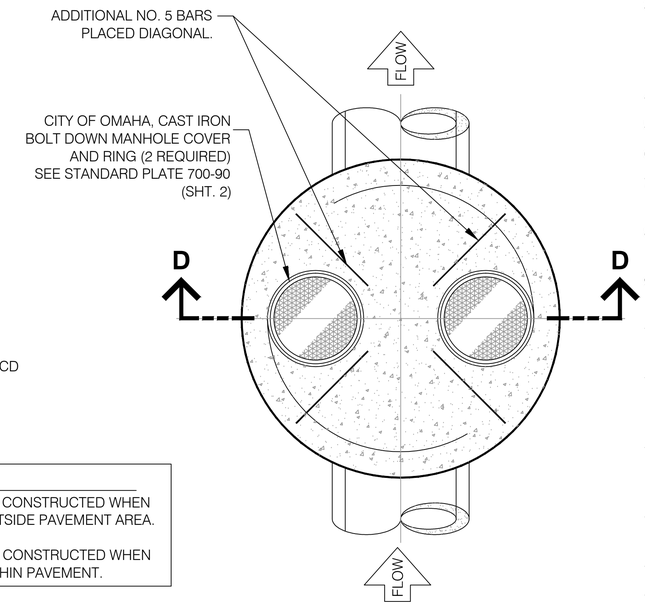

ALTERNATE TOP
MANHOLE LOCATED WITHIN PAVEMENT

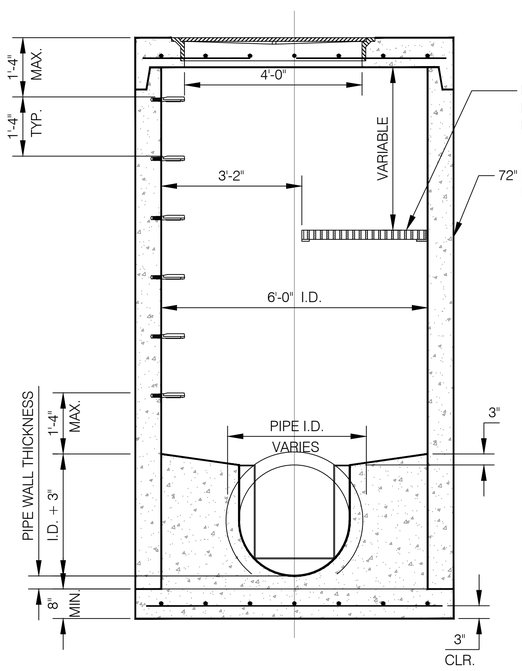

SECTION B-B

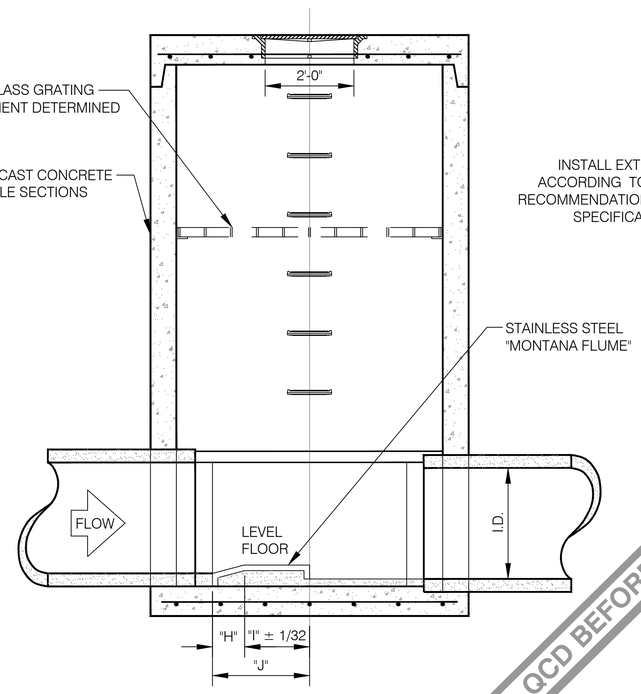

SECTION A-A

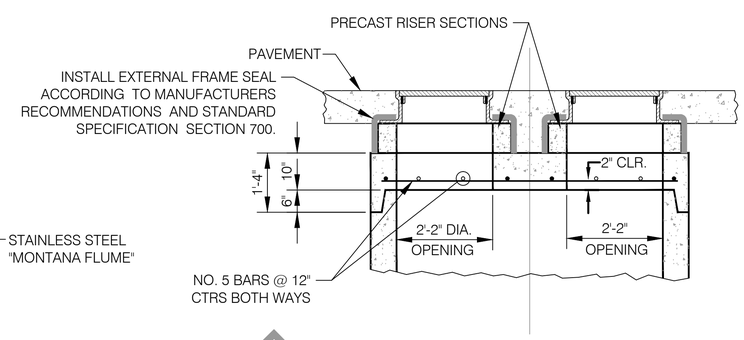

SECTION D-D

CALL QCD BEFORE PROCEDING

NOTES

1. QUALITY CONTROL DIVISION (QCD) MUST VERIFY THE DIMENSIONS AND TOLERANCES OF THE FLUME BEFORE INSTALLATION.
2. INDUSTRY SHALL PROVIDE ANTICIPATED MAXIMUM AND MINIMUM FLOW RATES IN GALLONS PER MINUTE (GPM) OR CUBIC FEET PER SECOND (CFS) TO QCD FOR SIZING PURPOSES.
3. QCD MUST INSPECT FORMS BEFORE POURING CONCRETE AND AFTER TO VERIFY PROPER INSTALLATION AND TO ENSURE TOLERANCE ARE WITHIN SPECIFICATION. CONTACT QCD: (402)444-3915 (EXT 135) TO ARRANGE INSPECTIONS.
4. ALL DIMENSIONS SHALL BE PROVIDED BY QCD.
5. FLUME SHALL BE FABRICATED FROM 10 GAUGE TYPE 304 STAINLESS STEEL.
6. FLUME MUST BE INSTALLED LEVEL AND PLUMB.
7. DISCHARGE OF FLUME MUST HAVE A FREE FALL OF _____ INCHES (SUPPLIED BY QCD) DEPENDENT ON FLUME SIZE.
8. APPROACH SECTION OF FLUME MAY BE FABRICATED OF STAINLESS STEEL OR FORMED IN CONCRETE.
9. TOLERANCES ON THROAT WIDTH (W) +/- 1/64TH OF AN INCH. ALL OTHER DIMENSIONS OF FLUME +/- 1/32ND OF AN INCH.
10. 2/3(A) MUST BE ETCHED INTO THE FLANGE OF THE FLUME AT THE EXACT DISTANCE. (SEE SHEET 3)
11. THE UPSTREAM APPROACH PIPE TO THE SMH MUST BE STRAIGHT (NO TIE INS, BENDS OR TURNS). THE MINIMUM LENGTH OF THE APPROACH PIPE SHALL BE EQUAL TO OR GREATER THAN 25 TIMES THE DIAMETER OF THE PIPE.
12. THE UPSTREAM AND DOWNSTREAM PIPE MUST HAVE A UNIFORM SLOPE AND BE DESIGNED SO THE APPROACHING FLOW IS RELATIVELY FREE OF TURBULENCE. PROVIDE QCD WITH % SLOPE FOR APPROVAL.
13. ALL CONCRETE SHALL BE HIGH ALKALINITY, MINIMUM 50% ALCAREOUS AGGREGATE, CLASS L65M, TYPE II CEMENT.
14. THE MINIMUM INSIDE DEPTH OF SAMPLING MANHOLES SHALL BE 4 FEET.
15. HINGED TOP LID SHALL BE CONSTRUCTED WHEN THE SAMPLING MANHOLE IS LOCATED OUTSIDE PAVEMENT AREA. ALTERNATE TOP SHALL BE CONSTRUCTED WHEN SAMPLING MANHOLE IS LOCATED WITHIN PAVEMENT (SEE SHEET 2).
16. CONCRETE TOP MAY BE PRECAST OR CAST IN PLACE.
17. STAINLESS STEEL SUPPORT ANGLES FOR GRATING SHALL BE FASTENED TO THE WALLS WITH STAINLESS STEEL CONCRETE ANCHORS.
18. GRATING PLACEMENT TO SMH SHALL BE DETERMINED BY QCD.
19. GRATING AND APPURTENANCES SHALL BE DESIGNED TO CARRY A UNIFORM LIVE LOAD OF 250 PSF AND A 500 LB CONCENTRATED LOAD AT THE MIDPOINT.
20. A LAYER OF ALUMILASTIC CONSISTENCY C, C-I, OR K, OR APPROVED EQUAL, SHALL BE PLACED BETWEEN ALUMINUM COMPONENTS AND ALL CONCRETED CONTACT POINTS.
21. PRECAST CONCRETE MANHOLE SHALL BE CONSTRUCTED IN ACCORDANCE WITH THIS STANDARD PLATE AND SANITARY MANHOLE REQUIREMENTS IN SECTION 700 OF THE MOST CURRENT VERSION OF 'THE CITY OF OMAHA STANDARD SPECIFICATIONS FOR PUBLIC WORKS CONSTRUCTION'. JOINTS SHALL BE CONFINED O-RING GASKET CONFORMING TO THE REQUIREMENTS OF ASTM C361.
22. 72" I.D. MANHOLE SHALL BE MANUFACTURED ACCORDING TO A.S.T.M. STANDARD SPECIFICATION C478 EXCEPT AS NOTED. USE 7" WALL THICKNESS.
23. SAMPLING MANHOLES SHALL BE LOCATED SO ACCESS IS AVAILABLE TO SAMPLING CREWS AT ALL TIMES.
24. MANHOLES ON PRIVATE PROPERTY SHALL BE LOCATED SO THEY ARE UNOBSTRUCTED BY PARKED OR MOVING VEHICLES.
25. IF THE FINAL QCD INSPECTION DETERMINES THE METERING DEVICE/PIPING DOES NOT MEET TOLERANCES OR SPECIFICATIONS THE INSTALLATION WILL BE REJECTED.
26. REINFORCING SHALL BE PLACED WITH A TOLERANCE OF -1/4" AND +1/2" ON CLEARANCE.

		DESIGN ENGINEER	CITY OF OMAHA PUBLIC WORKS DEPARTMENT
		CITY ENGINEER	SAMPLING MANHOLES MONTANA FLUME TYPE
			STANDARD PLATE 700-18 SHEET 2/3
			ISSUE DATE: ..... DECEMBER 10, 2013

L:\Engineering\011010\DOCUMENTS\Standard Plates\ACAD Files from City\REVISED PLATE NUMERS\PLT-700-18 (2).dwg, 3/6/2014 2:41:16 PM, rick4, 1:1.0241, Lamp, Rynearson & Associates

MONTANA FLUME
INTERIOR PLAN

NOTES: MONTANA FLUME DIMENSIONS, TOLERANCES, & REQUIREMENTS

1. QUALITY CONTROL DIVISION (QCD) MUST VERIFY THE DIMENSIONS AND TOLERANCES OF THE FLUME BEFORE INSTALLATION.
2. INDUSTRY SHALL PROVIDE ANTICIPATED MAXIMUM AND MINIMUM FLOW RATES IN GALLONS PER MINUTE (GPM) OR CUBIC FEET PER SECOND (CFS) TO QCD FOR SIZING PURPOSES.
3. QCD MUST INSPECT FORMS BEFORE POURING CONCRETE AND AFTER TO VERIFY PROPER INSTALLATION AND TO ENSURE TOLERANCE ARE WITHIN SPECIFICATION. CONTACT QCD: (402) 444-3915 (EXT 135) TO ARRANGE INSPECTIONS.
4. ALL DIMENSIONS SHALL BE PROVIDED BY QCD.
5. FLUME SHALL BE FABRICATED FROM 10 GAUGE TYPE 304 STAINLESS STEEL.
6. FLUME MUST BE INSTALLED LEVEL AND PLUMB.
7. DISCHARGE OF FLUME MUST HAVE A FREE FALL OF _____ INCHES (SUPPLIED BY QCD) DEPENDENT ON FLUME SIZE.
8. APPROACH SECTION OF FLUME MAY BE FABRICATED OF STAINLESS STEEL OR FORMED IN CONCRETE.
9. TOLERANCES ON THROAT WIDTH (W) +/- 1/64TH OF AN INCH. ALL OTHER DIMENSIONS OF FLUME +/- 1/32ND OF AN INCH.
10. 2/3(A) MUST BE ETCHED INTO THE FLANGE OF THE FLUME AT THE EXACT DISTANCE.
11. THE UPSTREAM APPROACH PIPE TO THE SMH MUST BE STRAIGHT (NO TIE INS, BENDS OR TURNS). THE MINIMUM LENGTH OF THE APPROACH PIPE SHALL BE EQUAL TO OR GREATER THAN 25 TIMES THE DIAMETER OF THE PIPE.
12. THE UPSTREAM AND DOWNSTREAM PIPE MUST HAVE A UNIFORM SLOPE AND BE DESIGNED SO THE APPROACHING FLOW IS RELATIVELY FREE OF TURBULENCE. PROVIDE QCD WITH % SLOPE FOR APPROVAL.
13. ALL CONCRETE SHALL BE HIGH ALKALINITY, MINIMUM 50% CALCAREOUS AGGREGATE, CLASS L65M, TYPE II CEMENT.
14. IF THE FINAL QCD INSPECTION DETERMINES THE METERING DEVICE/PIPING DOES NOT MEET TOLERANCES OR SPECIFICATIONS THE INSTALLATION WILL BE REJECTED.

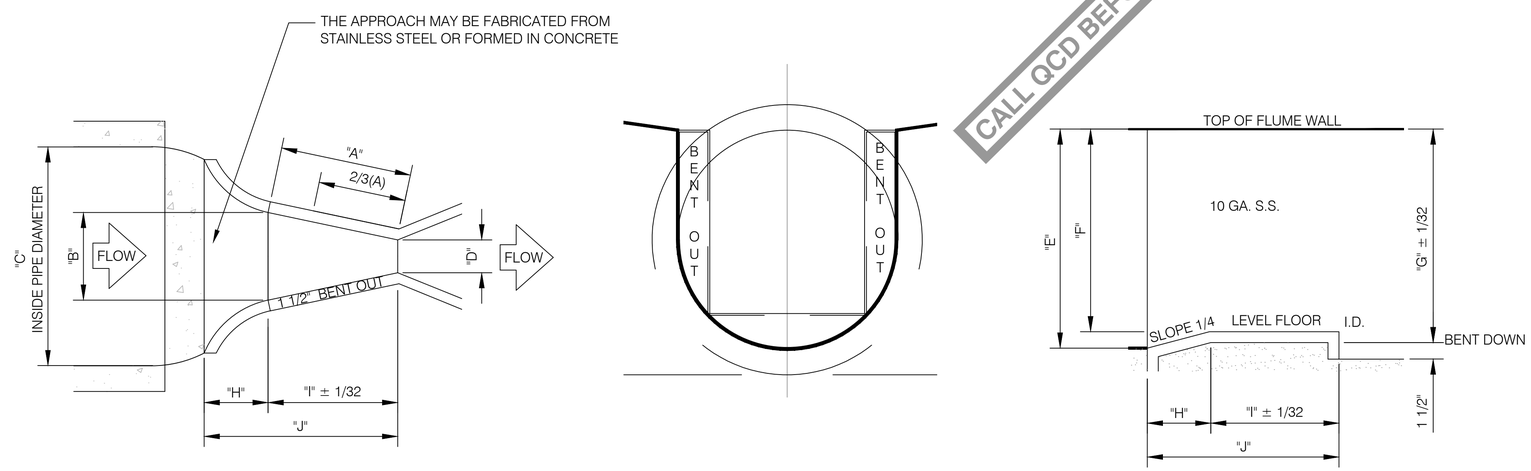

PLAN VIEW

FRONT VIEW

SIDE VIEW

CALL QCD BEFORE PROCEDING

V-NOTCH WEIR
INTERIOR PLAN

NOTES: STANDARD V-NOTCH WEIR DIMENSIONS, TOLERANCES, & REQUIREMENTS

1. QUALITY CONTROL DIVISION (QCD) MUST VERIFY THE DIMENSIONS AND TOLERANCES OF THE GUIDES AND WEIR PLATE BEFORE INSTALLATION.
2. INDUSTRY SHALL PROVIDE ANTICIPATED MAXIMUM AND MINIMUM FLOW RATES IN GALLONS PER MINUTE (GPM) OR CUBIC FEET PER SECOND (CFS) TO QCD FOR SIZING PURPOSES.
3. QCD MUST INSPECT FORMS BEFORE POURING CONRETE AND AFTER TO VERIFY PROPER INSTALLATION AND TO ENSURE TOLERANCE ARE WITHIN SPECIFICATION. CONTACT QCD: (402) 444-3915 (EXT 135) TO ARRANGE INSPECTIONS.
4. ALL DIMENSIONS SHALL BE PROVIDED BY QCD.
5. WEIR GUIDES AND ¼" WEIR PLATE MUST BE FABRICATED FROM 10 GAUGE TYPE 304 STAINLESS STEEL.
6. ALL DIMENSIONS OF V-NOTCH + OR - 1/64TH INCH.
7. ALL WEIR PLATE SURFACES MUST BE MILLED, LEVEL, AND PLUMB.
8. ENTIRE V-NOTCH MUST HAVE A 60 DEGREE DOWNSTREAM CHAMFERED EDGE.
9. V-NOTCH MUST COME TO A SHARP DEFINED POINT.
10. WEIR PLATE MUST REST IN WEIR GUIDES LEVEL AND PLUMB.
11. THE UPSTREAM APPROACH PIPE TO THE SMH MUST BE STRAIGHT (NO TIE INS, BENDS OR TURNS). THE MINIMUM LENGTH OF THE APPROACH PIPE SHALL BE EQUAL TO OR GREATER THAN 25 TIMES THE DIAMETER OF THE PIPE.
12. THE UPSTREAM AND DOWNSTREAM PIPE MUST HAVE A UNIFORM SLOPE AND BE DESIGNED SO THE APPROACHING FLOW IS RELATIVELY FREE OF TURBULENCE. PROVIDE QCD WITH % SLOPE FOR APPROVAL ALL CONCRETE SHALL BE HIGH ALKALINITY, MINIMUM 50% CALCAREOUS AGGREGATE, CLASS L65M, TYPE II CEMENT.
13. IF THE FINAL QCD INSPECTION DETERMINES THE METERING DEVICE/PIPING DOES NOT MEET TOLERANCES OR SPECIFICATIONS THE INSTALLATION WILL BE REJECTED.

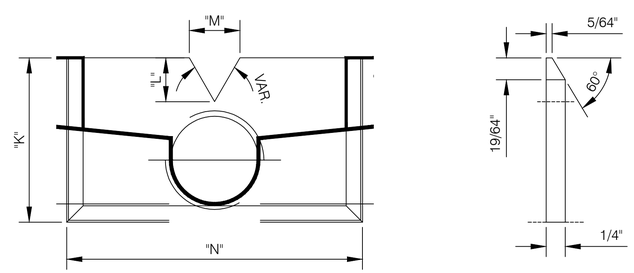

FRONT VIEW

SIDE PLATE VIEW

CALL QCD BEFORE PROCEDING

		DESIGN ENGINEER	CITY OF OMAHA PUBLIC WORKS DEPARTMENT
		CITY ENGINEER	SAMPLING MANHOLES MONTANA FLUME & WEIR TYPE DETAILS
			STANDARD PLATE 700-18 SHEET 3/3
			ISSUE DATE: ..... DECEMBER 10, 2013

L:\Engineering\011010\DOCUMENTS\Standard Plates\ACAD Files from City\REVISED PLATE NUMERS\PLT-700-18 (3).dwg, 2/18/2014 3:16:22 PM, rdsk, 1:1.03774, Lamp, Rynearson & Associates

CURB INLET DATA w/7" PAVEMENT				
DIA. OF PIPE	DIMENSIONS X MIN.	DIMENSIONS D	CONCRETE CU. YDS.	CONCRETE CU. YDS. DEDUCT FOR EACH PIPE OPENING
12"	3'-2"	1'-10"	3.289	.034
15"	3'-6"	1'-10"	3.416	.051
18"	3'-9"	1'-10"	3.512	.071
24"	4'-3"	1'-10"	3.703	.121

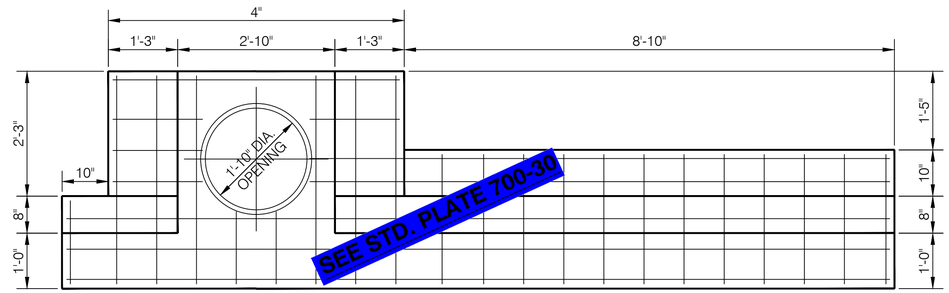

REINFORCED CONCRETE COVER

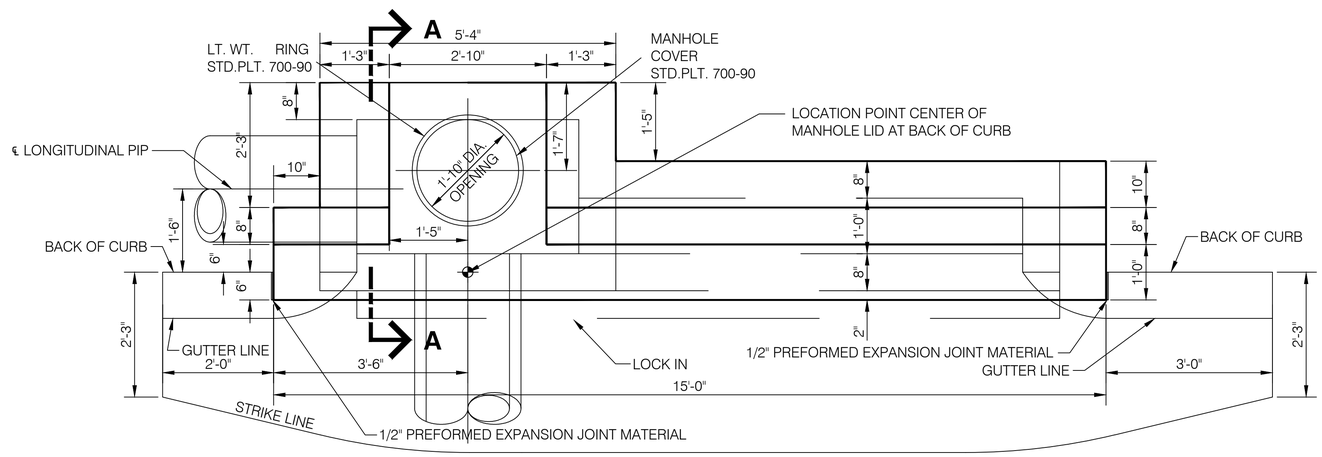

PLAN VIEW

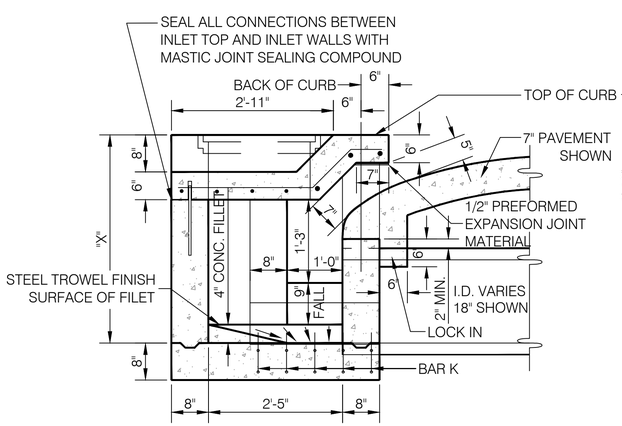

SECTION "A-A"

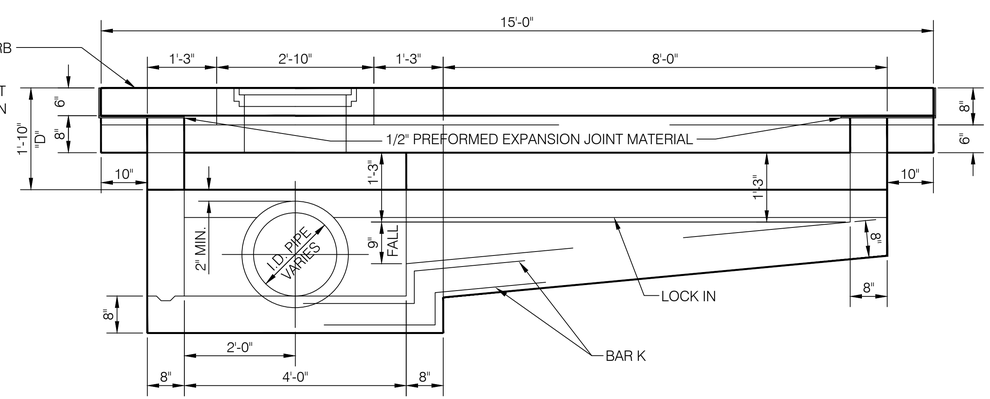

FRONT ELEVATION

NOTES

1. INLET DESIGN FOR OUTLET THROUGH FRONT, BACK OR END WALL. FOR OTHER LAYOUTS SEE SHEETS 2 AND 3.
2. ALL CONCRETE SHALL BE CLASS L65M.
3. ALL EXPOSED EDGES OF CONCRETE SHALL BE CHAMFERED.
4. THE CONCRETE COVER MAY BE CAST IN PLACE OR PRECAST, WITH LT. WT. RING AND COVER (STD. PLT. 700-90).
5. REINFORCING STEEL SHALL BE DEFORMED BARS IN ACCORDANCE WITH ASTM A615 GRADE 60. THE COVERING, MEASURED FROM THE FACE OF CONCRETE TO THE SURFACE OF ANY REINFORCING BAR SHALL BE 1 1/2 INCHES.
6. "D" AND "X" ARE DESIGNED FOR INLET USE WITH 7" THICK PAVEMENT. INCREASE "D" AND "X" 1" FOR EVERY 1" INCREASE OF PAVEMENT THICKNESS.
7. FOR INLET BLOCKOUT DETAILS SEE SHEET 5.
8. CONTRACTOR SHALL USE A GUTTER DEPRESSION TEMPLATE TO ASSURE PROPER INLET OPENING. CONTRACTOR SHALL FURNISH A TEMPLATE AS PER DETAIL SHEET 5, OR ONE AS APPROVED BY THE ENGINEER.

REINFORCING BAR BENDING DIAGRAM FOR CURB INLET

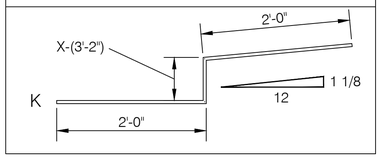

9. CURB INLET STRUCTURES MORE THAN 7 FEET IN DEPTH SHALL BE DESIGNED BY A LICENSED PROFESSIONAL ENGINEER.
10. REINFORCING SHALL BE PLACED WITH A TOLERANCE OF -1/4" AND +1/2" ON CLEARANCE.

REINFORCING BAR SCHEDULE				
BAR	SIZE	SHAPE	QUANT.	LENGTH
K	4	BENT	10	VARIES

DESIGN ENGINEER

CITY ENGINEER

CITY OF OMAHA PUBLIC WORKS DEPARTMENT

CURB INLETS

TYPE 1 WITH TRANSVERSE PIPE

STANDARD PLATE **700-21**

SHEET 1 / 5

ISSUE DATE: ... DECEMBER 10, 2013

L:\Engineering\011010\DOCUMENTS\Standard Plates\ACAD Files from City\REVISED PLATE NUMBERS\PLT-700-21 (1).dwg, 3/6/2014 2:43:19 PM, rickk, 1:1.0241, Lamp, Rynearson & Associates

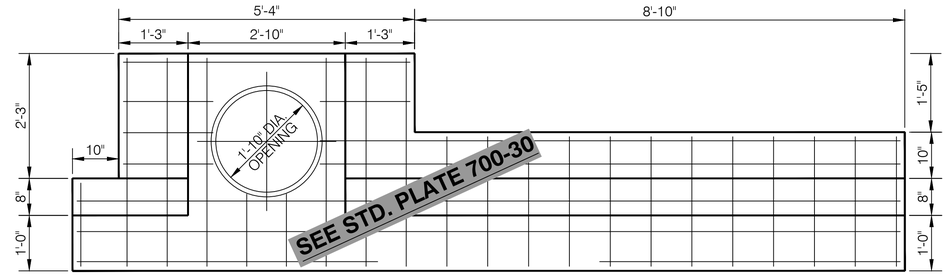

REINFORCED CONCRETE COVER

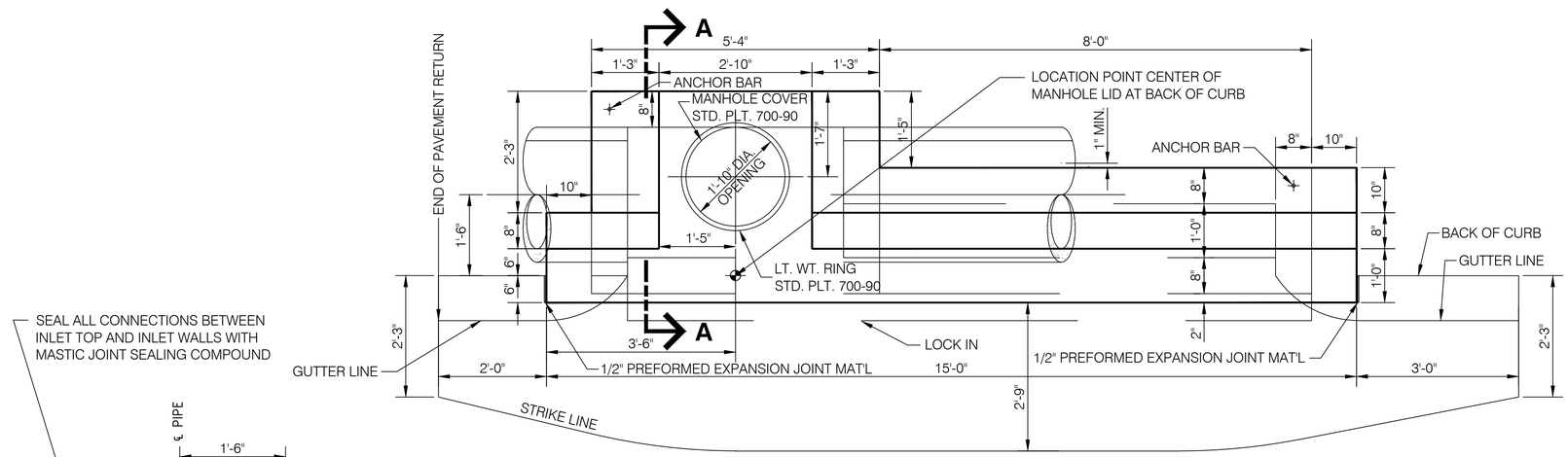

PLAN VIEW

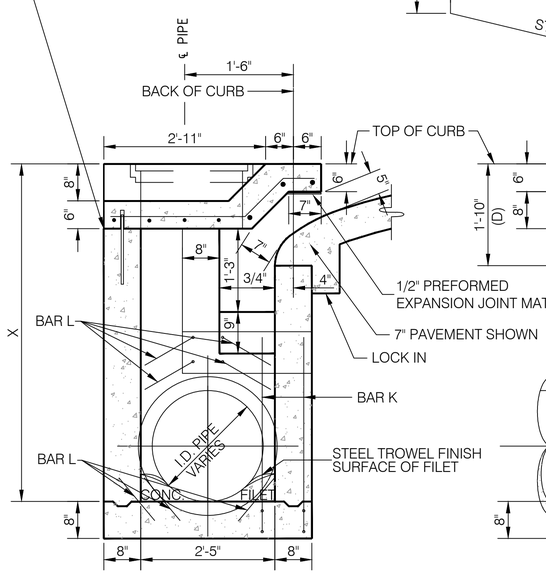

SECTION "A-A"

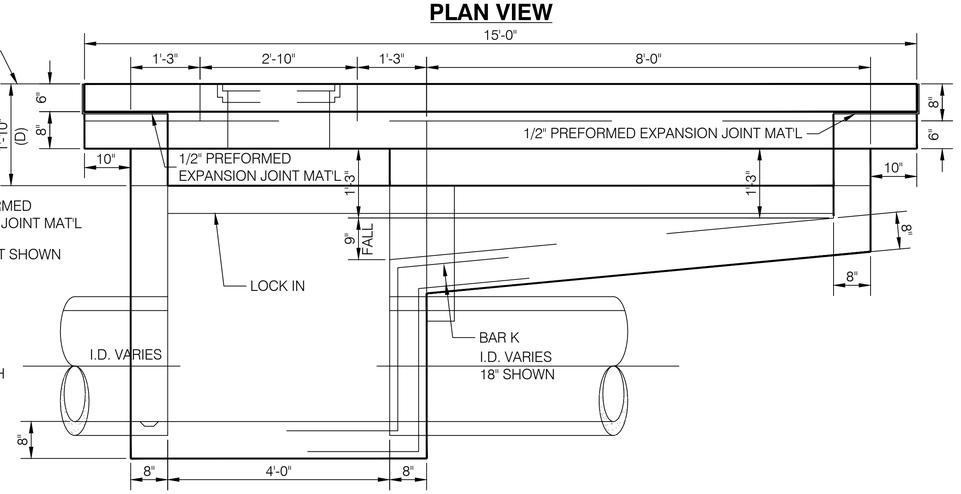

FRONT ELEVATION

REINFORCING BAR BENDING DIAGRAM FOR CURB INLET

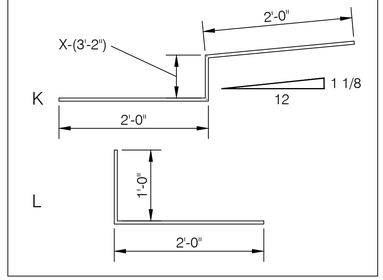

REINFORCING BAR SCHEDULE

BAR	SIZE	SHAPE	QUANT.	LENGTH
K	4	BENT	10	VARIES

CURB INLET DATA w/7" PAVEMENT

DIA. OF PIPE	DIMENSIONS X MIN.		D	*CONCRETE CU. YDS.	CONCRETE CU. YDS. DEDUCT FOR EACH PIPE OPENING
12"	5'-0"		1'-10"	3.990	.034
15"	5'-4"		1'-10"	4.118	.051
18"	5'-7"		1'-10"	4.213	.071
24"	6'-1"		1'-10"	4.405	.121
30"	6'-8"		1'-10"	4.628	.185

* ADD .383 CU. YDS. CONCRETE FOR ONE FOOT INCREASE OF "X"

** GALVANIZED OR EPOXY COATED FACE BAR

*** FOR 30" PIPE ONLY, USE 2 K BARS W/6 L BARS IN THE TROUGH AND 4 L BARS IN THE FLOOR.

NOTES

1. INLET DESIGN FOR OUTLET IN STORM SEWER BELOW INLET TROUGH. OTHER INLET LEADS-CONNECT AS SHOWN ON PLANS. FOR OTHER LAYOUTS SEE SHEETS 1 AND 3.
2. ALL CONCRETE SHALL BE CLASS L65M.
3. ALL EXPOSED EDGES OF CONCRETE SHALL BE CHAMFERED.
4. THE CONCRETE COVER MAY BE CAST IN PLACE OR PRECAST, WITH LT. WT. RING AND COVER (STD. PLT. 700-90).
5. REINFORCING STEEL SHALL BE DEFORMED BARS IN ACCORDANCE WITH ASTM A615 GRADE 60. THE COVERING, MEASURED FROM THE FACE OF CONCRETE TO THE SURFACE OF ANY REINFORCING BAR SHALL BE 1 1/2 INCHES.
6. "D" AND "X" ARE DESIGNED FOR INLET USE WITH 7" THICK PAVEMENT. INCREASE "D" 1" FOR EVERY 1" INCREASE OF PAVEMENT THICKNESS.
7. FOR INLET BLOCKOUT DETAILS SEE SHEET 5.
8. CONTRACTOR SHALL USE A GUTTER DEPRESSION TEMPLATE TO ASSURE PROPER INLET OPENING. CONTRACTOR SHALL FURNISH A TEMPLATE AS PER DETAIL SHEET 5, OR ONE AS APPROVED BY THE ENGINEER.
9. CURB INLET STRUCTURES MORE THAN 7 FEET IN DEPTH SHALL BE DESIGNED BY A LICENSED PROFESSIONAL ENGINEER.
10. REINFORCING SHALL BE PLACED WITH A TOLERANCE OF -1/4" AND +1/2" ON CLEARANCE.

DESIGN ENGINEER

CITY ENGINEER

CITY OF OMAHA PUBLIC WORKS DEPARTMENT

CURB INLETS
TYPE II WITH LONGITUDINAL PIPE PLACED
BELOW INLET TROUGH

STANDARD PLATE **700-21**

SHEET 2/5

ISSUE DATE: ... DECEMBER 10, 2013

L:\Engineering\01\01\02\DOCUMENTS\Standard Plates\ACAD Files from City\REVISED PLATE NUMERS\PLT 700-21 (2).dwg, 3/6/2014 2:44:33 PM, rickk, 1:1.0241, Lamp, Rynearson & Associates

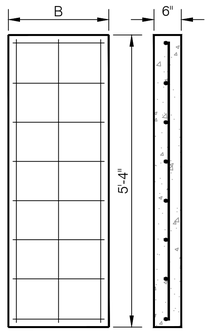

REINF. CONCRETE COVER

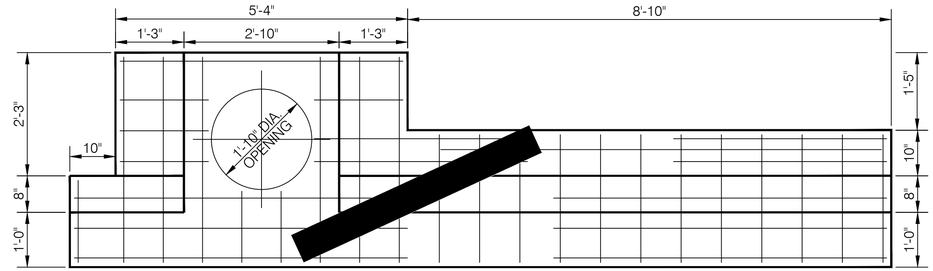

REINFORCED CONCRETE COVER

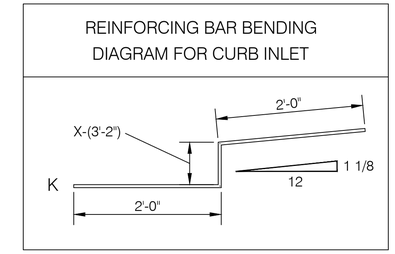

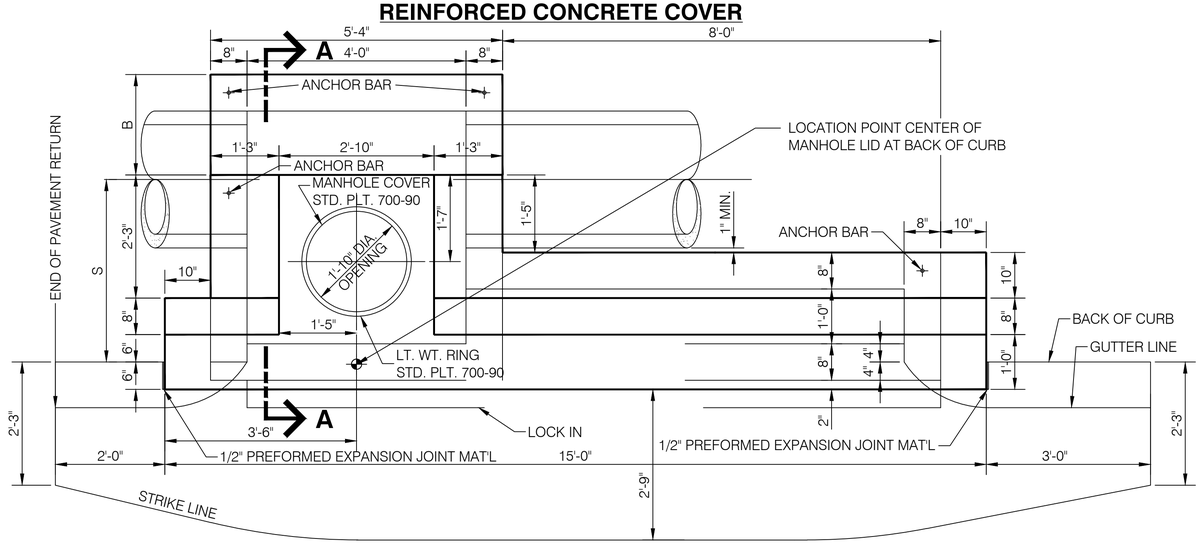

PLAN VIEW

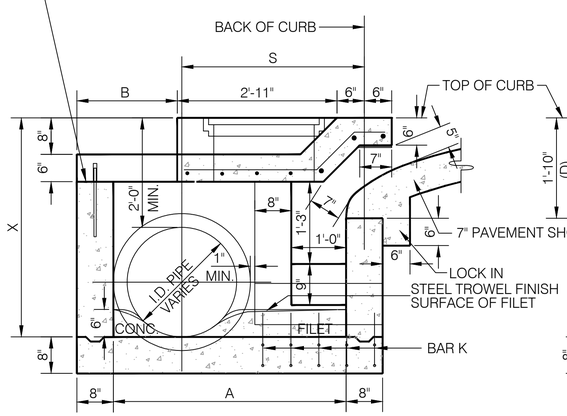

SECTION "A-A"

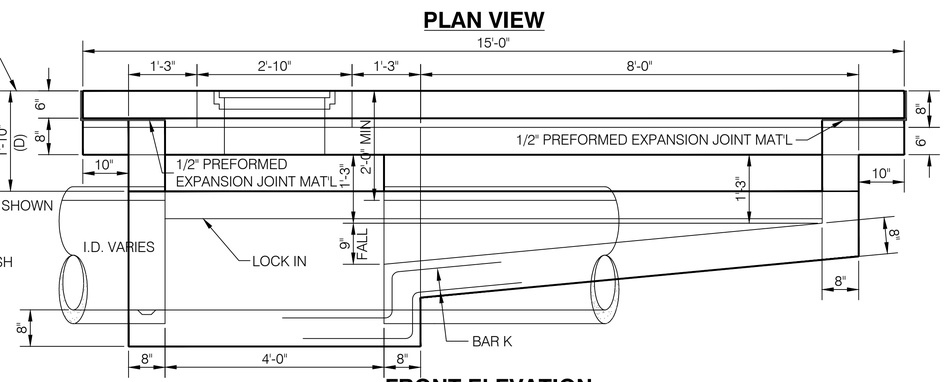

FRONT ELEVATION

NOTES

1. INLET DESIGN FOR OUTLET THROUGH FRONT, BACK OR END WALL. FOR OTHER LAYOUTS SEE SHEETS 1 AND 2.
2. ALL CONCRETE SHALL BE CLASS L65M.
3. ALL EXPOSED EDGES OF CONCRETE SHALL BE CHAMFERED.
4. THE CONCRETE COVER MAY BE CAST IN PLACE OR PRECAST, WITH LT. WT. RING AND COVER (STD. PLT. 700-90).
5. REINFORCING STEEL SHALL BE DEFORMED BARS IN ACCORDANCE WITH ASTM A615 GRADE 60. THE COVERING, MEASURED FROM THE FACE OF CONCRETE TO THE SURFACE OF ANY REINFORCING BAR SHALL BE 1 1/2 INCHES.
6. "D" AND "X" ARE DESIGNED FOR INLET USE WITH 7" THICK PAVEMENT. INCREASE "D" 1" FOR EVERY 1" INCREASE OF PAVEMENT THICKNESS.
7. FOR INLET BLOCKOUT DETAILS SEE SHEET 5.
8. CONTRACTOR SHALL USE A GUTTER DEPRESSION TEMPLATE TO ASSURE PROPER INLET OPENING. CONTRACTOR SHALL FURNISH A TEMPLATE AS PER DETAIL SHEET 5, OR ONE AS APPROVED BY THE ENGINEER.
9. CURB INLET STRUCTURES MORE THAN 7 FEET IN DEPTH SHALL BE DESIGNED BY A LICENSED PROFESSIONAL ENGINEER.
10. REINFORCING SHALL BE PLACED WITH A TOLERANCE OF -1/4" AND +1/2" ON CLEARANCE.

CURB INLET DATA w/7" PAVEMENT

DIA. OF PIPE	DIMENSIONS X MIN.	A	B	D	S	*CONCRETE CU. YDS.	CONCRETE CU. YDS. DEDUCT FOR EACH PIPE OPENING	CONCRETE CU. YDS. ADD FOR ONE FOOT INCREASE "X"
18"	3'-6"	3'-8"	1'-3"	1'-10"	3'-1"	3.848	.071	.444
24"	4'-0"	4'-3"	1'-10"	1'-10"	3'-4"	4.286	.121	.473
30"	4'-6"	4'-10"	2'-5"	1'-10"	3'-8"	4.754	.185	.502
36"	5'-0"	5'-5"	3'-0"	1'-10"	3'-11"	5.249	.262	.531
42"	5'-6"	6'-0"	3'-7"	1'-10"	4'-3"	5.774	.352	.560
48"	6'-0"	6'-7"	4'-2"	1'-10"	4'-6"	6.327	.453	.589
54"	6'-6"	7'-2"	4'-9"	1'-10"	4'-10"	6.910	.569	.617
60"	7'-0"	7'-9"	5'-4"	1'-10"	5'-1"	7.521	.698	.646

GALVANIZED OR EPOXY COATED BAR

REINFORCING BAR SCHEDULE

BAR	SIZE	SHAPE	QUANT.	LENGTH
K	4	BENT	10	VARIES

DESIGN ENGINEER

CITY ENGINEER

CITY OF OMAHA PUBLIC WORKS DEPARTMENT

CURB INLETS
TYPE III WITH LONGITUDINAL PIPE PLACED BEHIND INLET TROUGH

STANDARD PLATE **700-21** SHEET 3/5

ISSUE DATE: ... DECEMBER 10, 2013

L:\Engineering\01101\DOCUMENTS\Standard Plates\ACAD Files from City\REVISED PLATE NUMERS\PL T-700-21 (3).dwg, 3/20/2014 1:39:34 PM, rickk, 1:1.03774, Lamp, Ryneerson & Associates

CURB INLET DATA w/7" PAVEMENT

DIA. OF PIPE	DIMENSIONS X MIN.	DIMENSIONS D	* CONCRETE CU. YDS.	CONCRETE CU. YDS. DEDUCT FOR EACH PIPE OPENING
12"	3'-2"	1'-10"	1.768	.034
15"	3'-6"	1'-10"	1.896	.051
18"	3'-9"	1'-10"	1.992	.071
24"	4'-0"	1'-10"	2.183	.121

* ADD. 0.383 CU. YDS. CONCRETE FOR ONE FOOT INCREASE OF "X"

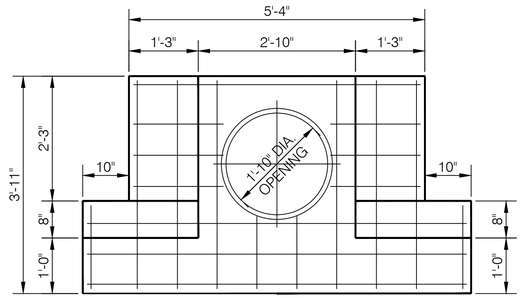

REINFORCED CONCRETE COVER

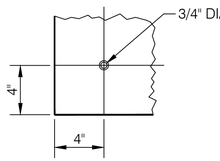

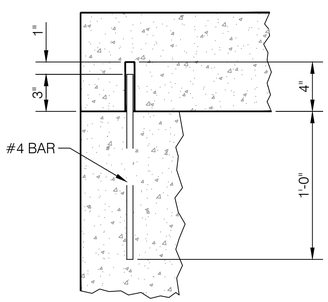

ANCHOR BAR DETAIL

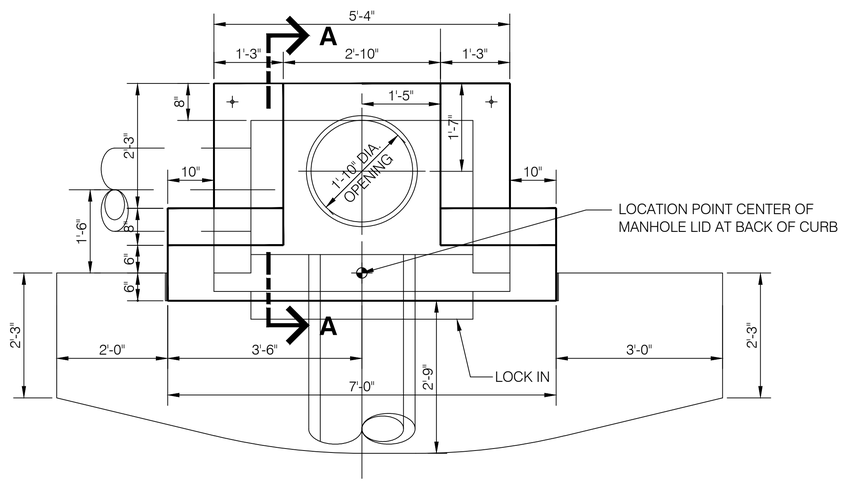

PLAN VIEW

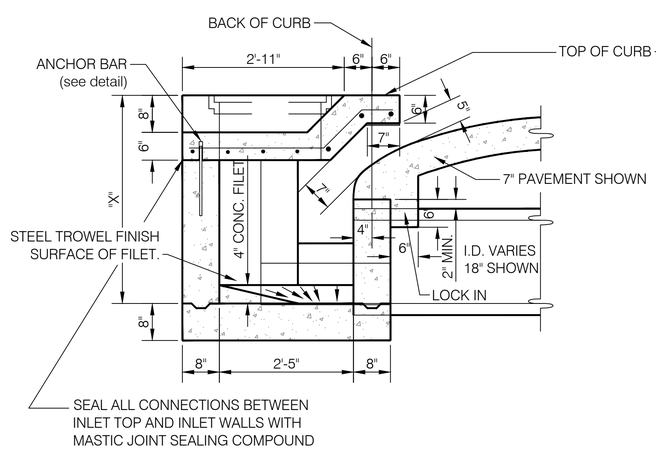

SECTION "A-A"

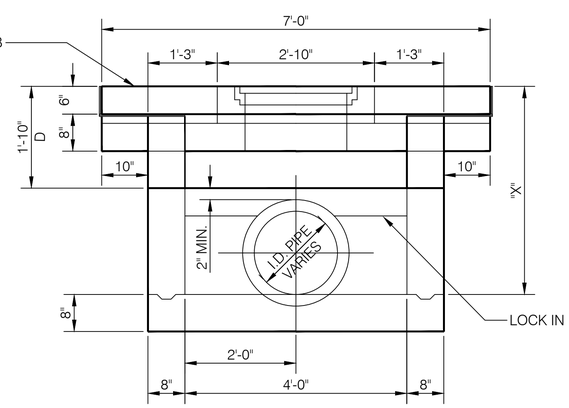

FRONT ELEVATION

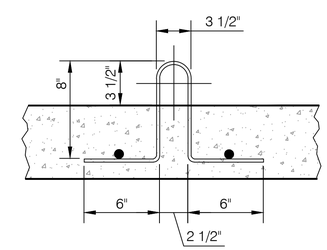

LIFT BAR DETAIL

NO SCALE

NOTES

1. INLET DESIGN FOR OUTLET THROUGH FRONT, BACK OR END WALL. MINIMUM DEPTH (X) IS REQUIRED TO PLACE PIPE THROUGH FRONT WALL OF INLET.
2. ALL CONCRETE SHALL BE CLASS L65M.
3. ALL EXPOSED EDGES OF CONCRETE SHALL BE CHAMFERED.
4. THE REINFORCED CONCRETE COVER MAY BE CAST IN PLACE OR PRECAST, WITH LT. WT. RING AND COVER (STD. PLT. 700-90).
5. REINFORCING STEEL SHALL BE DEFORMED BARS IN ACCORDANCE WITH ASTM A615 GRADE 60. THE COVERING, MEASURED FROM THE FACE OF CONCRETE TO THE SURFACE OF ANY REINFORCING BAR SHALL BE 1 1/2 INCHES.
6. "D" AND "X" ARE DESIGNED FOR INLET USE WITH 7" THICK PAVEMENT. FOR PAVEMENT GREATER THAN 7", INCREASE "D" AND "X" BY 1" FOR EVERY 1" INCREASE OF PAVEMENT THICKNESS.
7. FOR INLET BLOCKOUT DETAILS SEE SHEET 5.
8. CONTRACTOR SHALL USE A GUTTER DEPRESSION TEMPLATE TO ASSURE PROPER INLET OPENING. THE CONTRACTOR SHALL FURNISH A TEMPLATE AS PER DETAIL SHEET 5, OR ONE AS APPROVED BY THE ENGINEER.
9. CURB INLET STRUCTURES MORE THAN 7 FEET IN DEPTH SHALL BE DESIGNED BY A LICENSED PROFESSIONAL ENGINEER.
10. REINFORCING SHALL BE PLACED WITH A TOLERANCE OF -1/4" AND +1/2" ON CLEARANCE.

		DESIGN ENGINEER	CITY OF OMAHA — PUBLIC WORKS DEPARTMENT
		CITY ENGINEER	CURB INLETS TYPE IV WITHOUT TROUGH
			STANDARD PLATE 700-21 — SHEET 4/5
			ISSUE DATE: ... DECEMBER 10, 2013

L:\Engineering\01101\02\DOCUMENTS\Standard Plates\ACAD Files from City\REVISED PLATE NUMERS\PL T-700-21 (4).dwg, 3/6/2014 2:46:47 PM, rickk, 1:1.0241, Lump, Rynearson & Associates

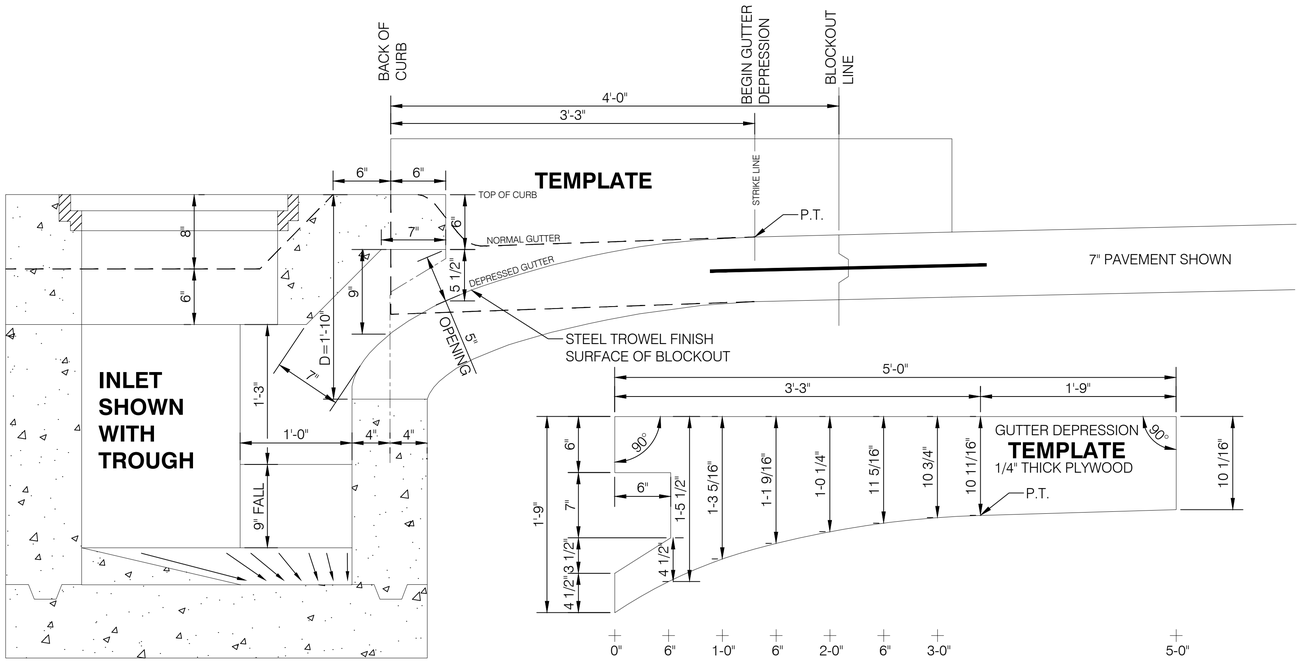

DEPRESSION TEMPLATE DETAILS

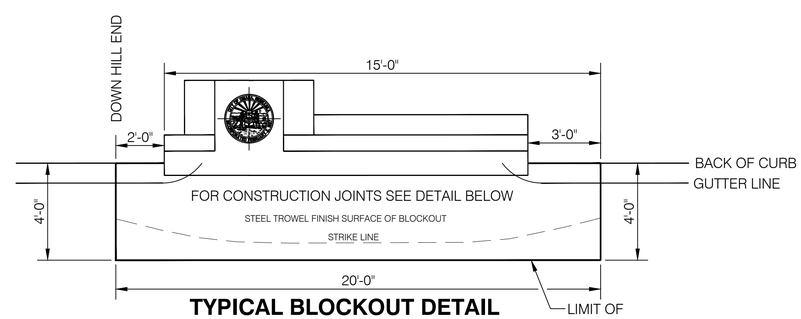

TYPICAL BLOCKOUT DETAIL

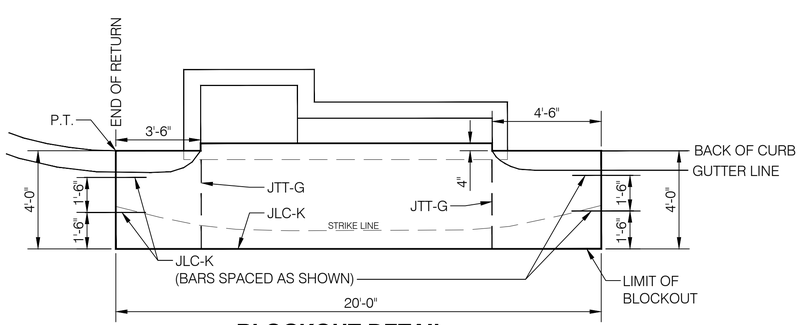

BLOCKOUT DETAIL
SHOWN WITHOUT INLET COVER

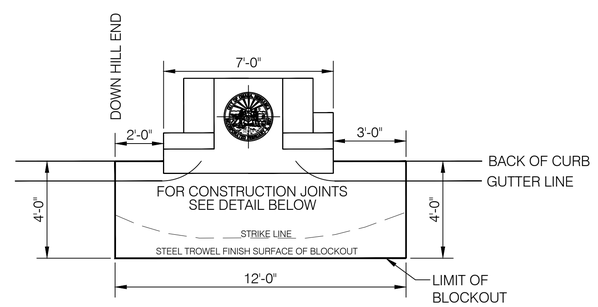

TYPICAL BLOCKOUT DETAIL

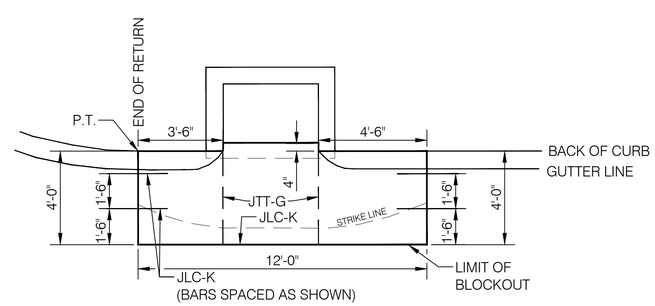

BLOCKOUT DETAIL
SHOWN WITHOUT INLET COVER

NOTES

1. ALL CONCRETE FOR STRUCTURES SHALL BE CLASS L65M.
2. ALL CONCRETE FOR PAVEMENT SHALL BE L65.

CURB INLET - TYPES I, II AND III	CURB INLET - TYPES IV	DESIGN ENGINEER CITY ENGINEER	CITY OF OMAHA PUBLIC WORKS DEPARTMENT **CURB INLETS** BLOCKOUT DETAILS, TEMPLATE DETAILS
			STANDARD PLATE **700-21** SHEET 5/5 ISSUE DATE: ... DECEMBER 10, 2013

L:\Engineering\01101\DOCUMENTS\Standard Plates\CAD Files from City\REVISED PLATE NUMERS\PLT-700-21 (5).dwg, 2/18/2014 3:43:48 PM, rrick, 1:1.03774, Lamp, Ryneerson & Associates

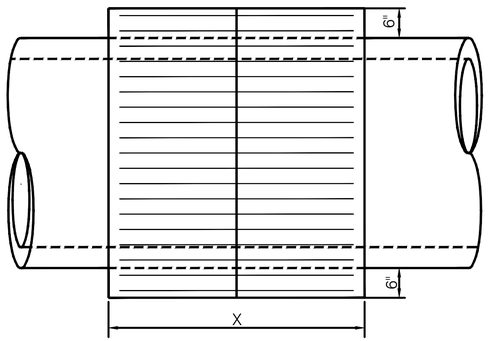

UP TO 30" PIPE X=1'-6"
30" THRU 54" PIPE X=2'-0"
54" AND LARGER PIPE X=3'-0"

CONCRETE COLLAR - ELEVATION VIEW

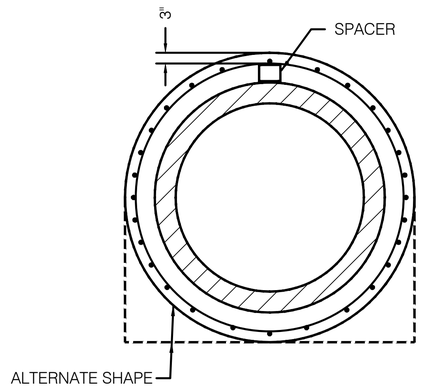

CONCRETE COLLAR TO BE 6" THICK. REINFORCING WITH 6" X 6", 6/6 WIRE MESH WRAPPED COMPLETELY AROUND THE PIPE AND SUPPORTED WITH APPROVED SPACER. CONCRETE SHALL BE L6 M.

CONCRETE COLLAR - SECTION VIEW

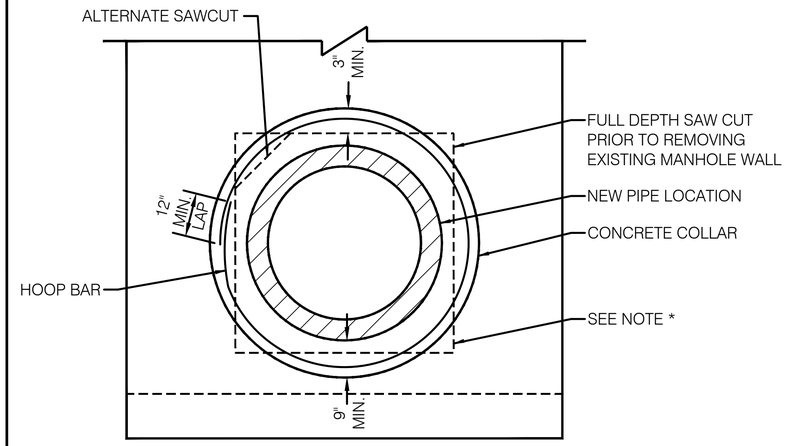

ELEVATION

2" MIN. CLEARANCE BETWEEN PIPE AND NEW MANHOLE OPENING

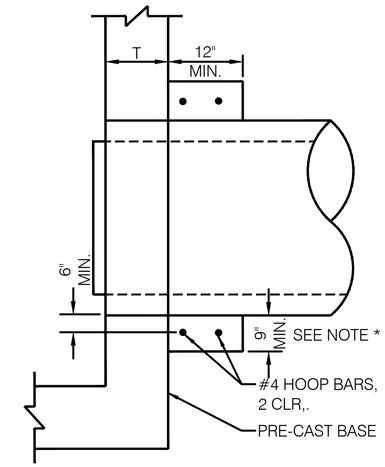

SECTION

PRECAST STORM MANHOLE TAP DETAIL

* THE CONCRETE COLLAR SHALL BE PLACED SUCH THAT IT COVERS THE WALL OPENING PLUS 3" MINIMUM WIDTH OUTSIDE THE SAW CUT.

D	X	HOOP BARS
18" OR SMALLER	6"	#3
LARGER THAN 18"	9"	#4

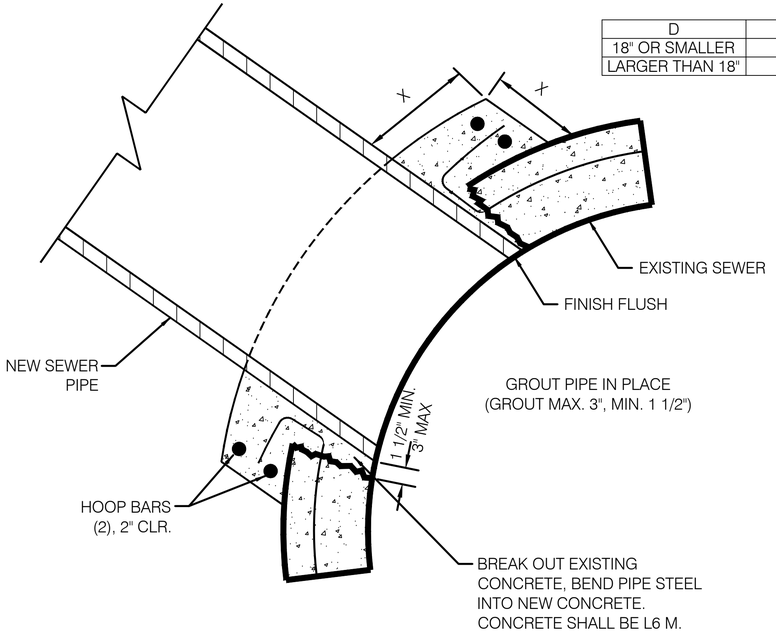

SEWER TAP - ELEVATION VIEW

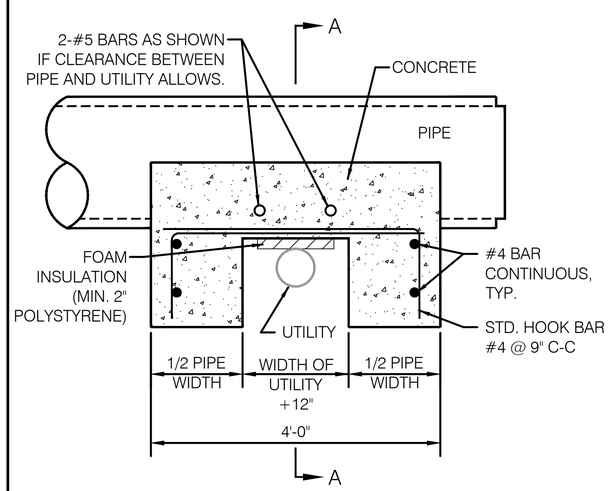

ELEVATION

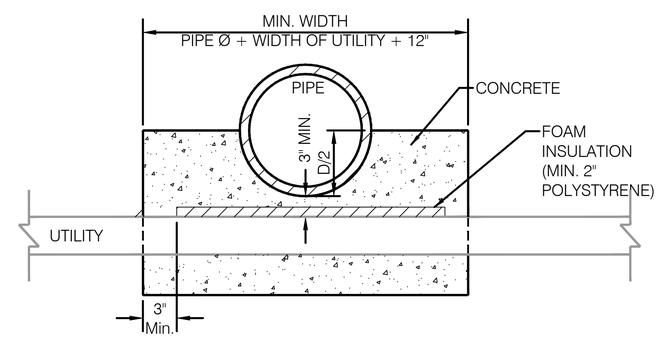

SECTION A-A

CONCRETE SADDLE DETAIL

		DESIGN ENGINEER	CITY OF OMAHA PUBLIC WORKS DEPARTMENT
		CITY ENGINEER	CONCRETE COLLAR AND SEWER TAP
			STANDARD PLATE 700-23 — SHEET 1/1
			ISSUE DATE: ... DECEMBER 10, 2013

L:\Engineering\01101\DOCUMENTS\Standard Plates\CAD Files from City\REVISED PLATE NUMERS\PL1-700-23.dwg, 3/6/2014 1:50:25 PM, rick, 1:1.0241, Lump, Rynearson & Associates

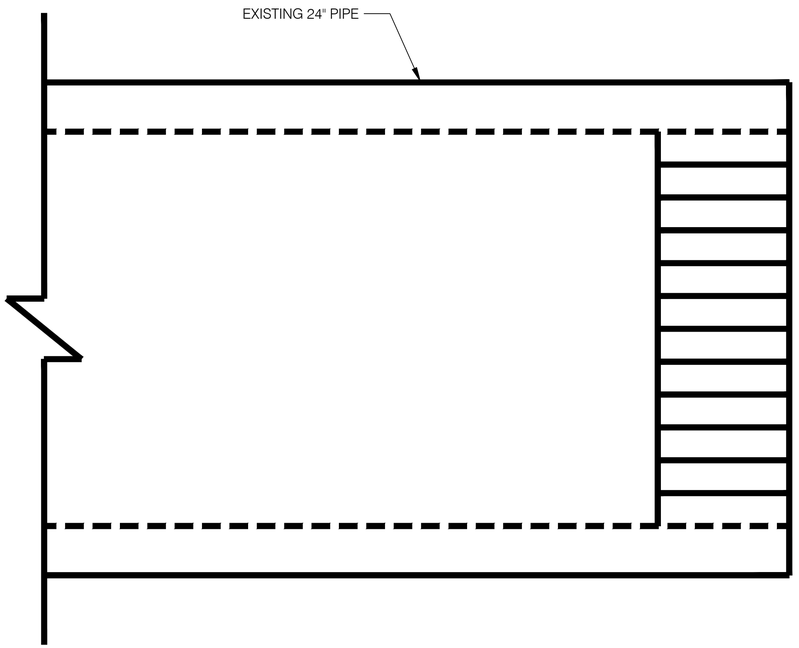

ELEVATION VIEW

NO SCALE

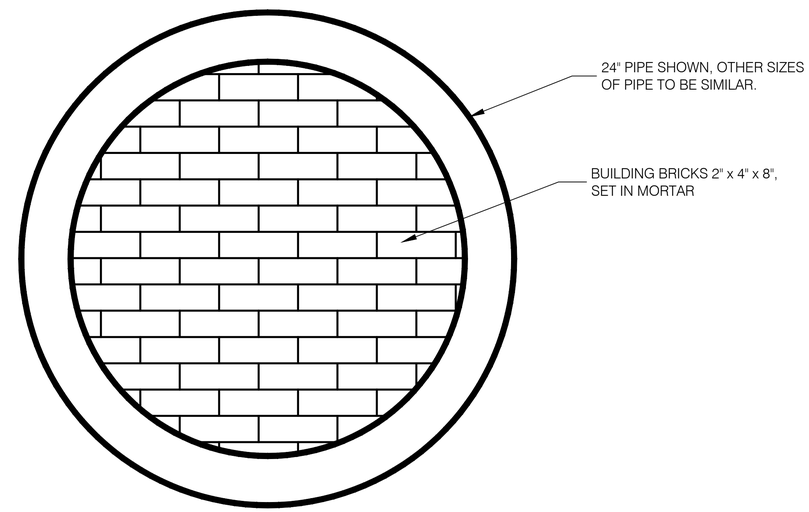

END VIEW

NO SCALE

NOTES

1. 12", 15", 18" AND 24" PIPE, PLUG WITH BUILDING BRICKS PLACED WITH LONGEST DIMENSION PARALLEL TO PIPE.
2. 30", 36" AND 42" PIPE, PLUG WITH 8" x 8" x 16" SOLID CONCRETE BLOCKS. 48" AND LARGER PIPE, PLUG WITH 8" x 12" x 16" SOLID CONCRETE BLOCKS
3. CONCRETE SHALL BE TYPE L6.

		DESIGN ENGINEER	CITY OF OMAHA PUBLIC WORKS DEPARTMENT
		CITY ENGINEER	PIPE PLUG

STANDARD PLATE **700-24** SHEET 1/1

ISSUE DATE: ..... DECEMBER 10, 2013

L:\Engineering\01101\DOCUMENTS\Standard Plates\ACAD Files from City\REVISED PLATE NUMERS\PL7-700-24.dwg, 2/18/2014 3:52:00 PM, rdok, 1:1.03774, Lamp, Rynearson & Associates

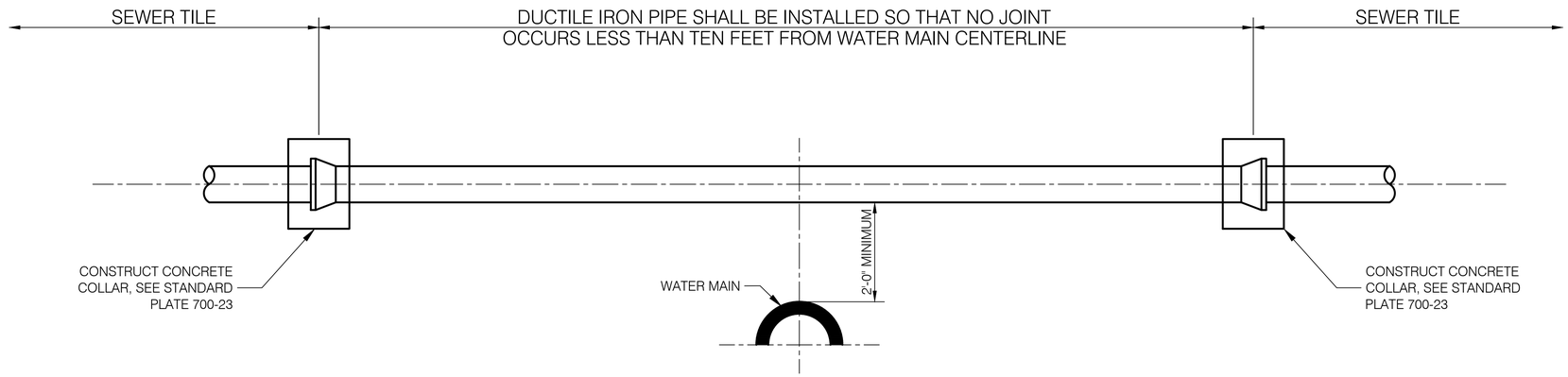

SEWER CROSSING OVER WATER MAIN

NO SCALE

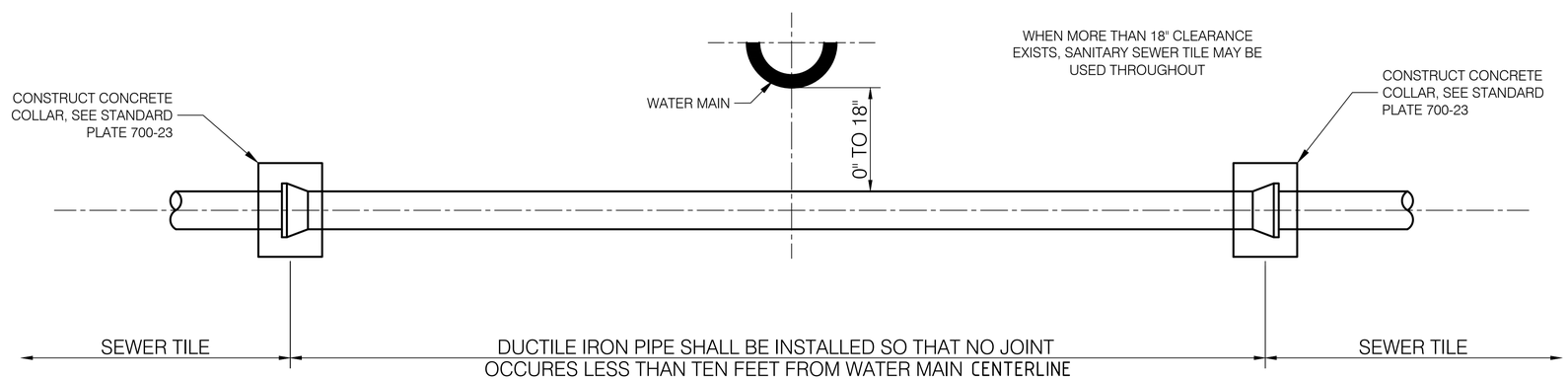

SEWER CROSSING UNDER WATER MAIN

NO SCALE

		DESIGN ENGINEER	CITY OF OMAHA PUBLIC WORKS DEPARTMENT
		CITY ENGINEER	**SANITARY SEWER WATER MAIN CROSSING**
			STANDARD PLATE **700-25** SHEET 1/1
			ISSUE DATE: ..... DECEMBER 10, 2013

L:\Engineering\011010\DOCUMENTS\Standard Plates\ACAD Files from City\REVISED PLATE NUMERS\PLT-700-25.dwg, 2/18/2014 3:53:49 PM, rrobk, 11.03774, Lamp, Rynearson & Associates

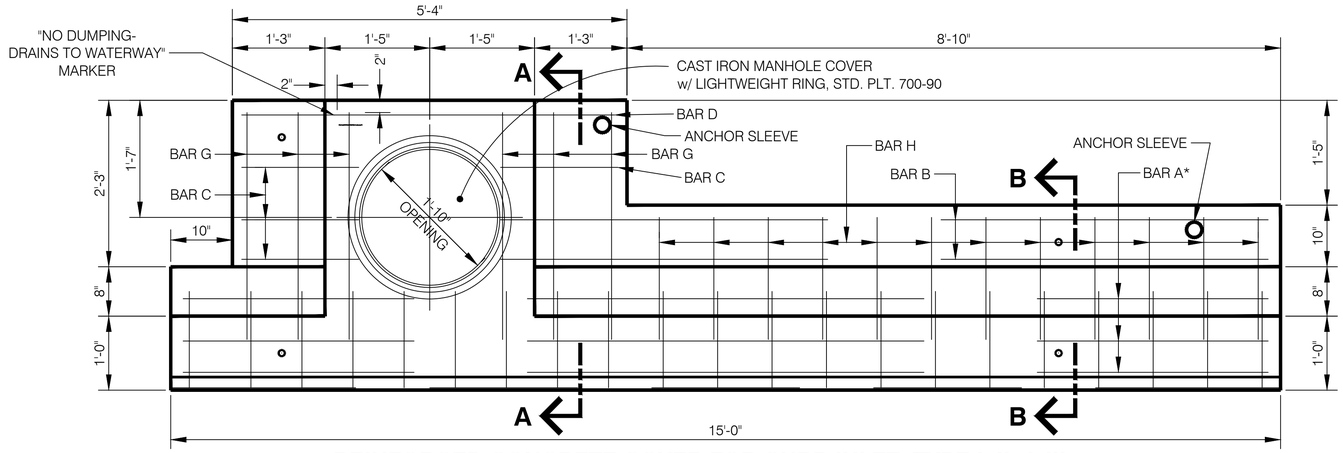

REINFORCED CONCRETE COVER FOR CURB INLET, TYPE I, II, & III

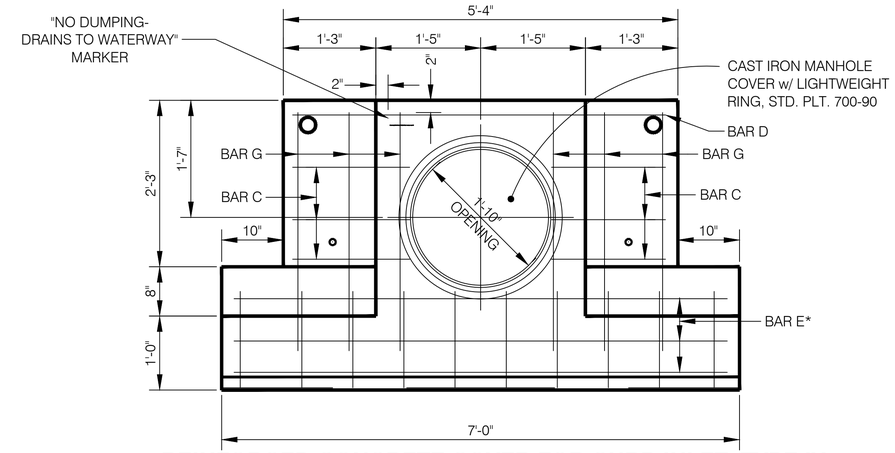

REINFORCED CONCRETE COVER FOR CURB INLET, TYPE IV

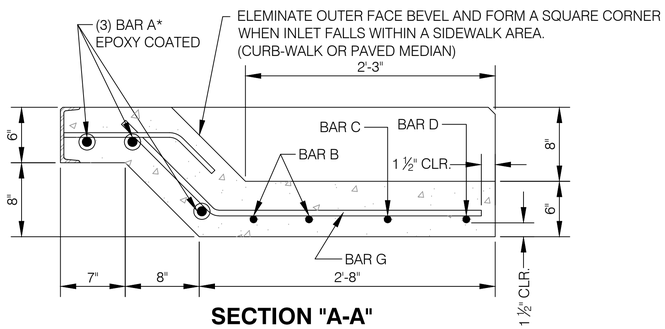

SECTION "A-A"

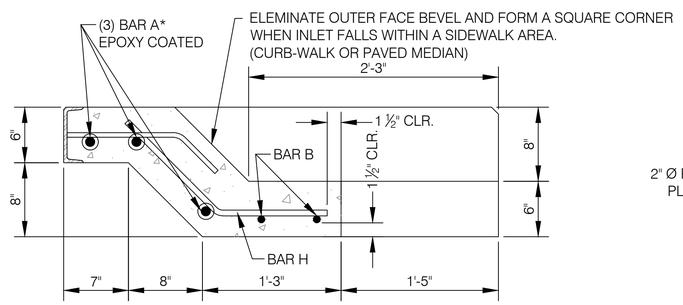

SECTION "B-B"

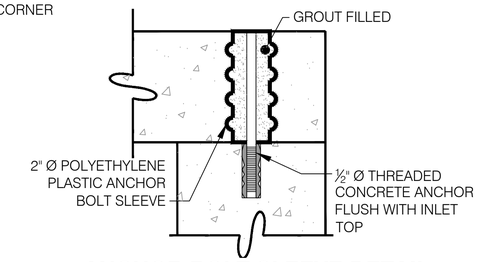

ANCHOR BOLT SLEEVE DETAIL

REINFORCING BAR SCHEDULE

BAR	SIZE	SHAPE	LENGTH	QUANTITY	
				I, II, III	IV
*A	8	STR.	14'-9"	3	
B	6	STR.	10'-4"	2	
C	6	STR.	1'-6"	4	6
D	6	STR.	5'-1"	1	1
*E	8	STR.	6'-9"		3
G	5	BENT	3'-6"	6	6
H	5	BENT	2'-1"	12	

*NOTE: A & E BARS ARE EPOXY COATED

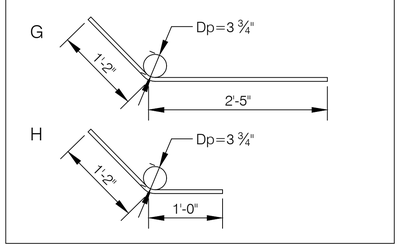

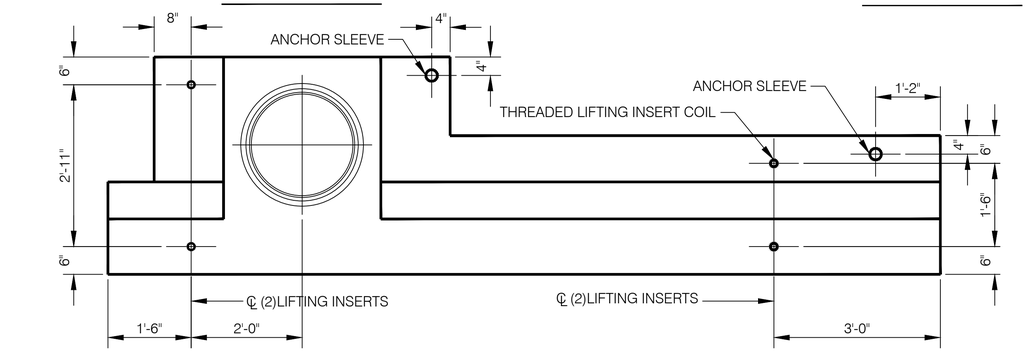

LIFT POINT-ANCHOR SLEEVE LOCATIONS

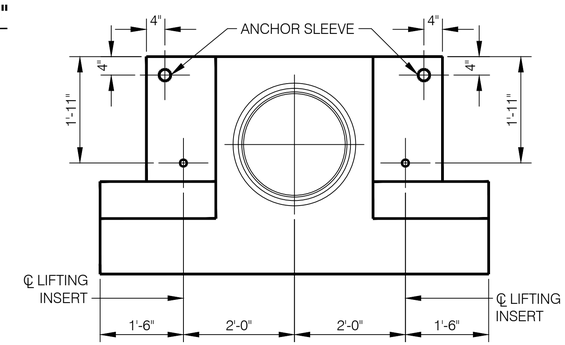

LIFT POINT-ANCHOR SLEEVE LOCATIONS

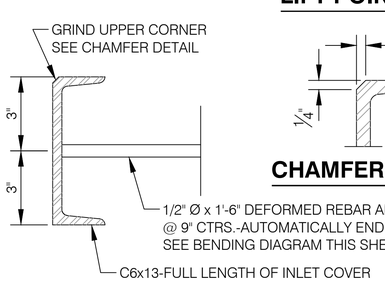

FACE ARMOR DETAIL

SEE NOTE 3

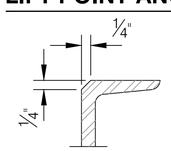

CHAMFER DETAIL

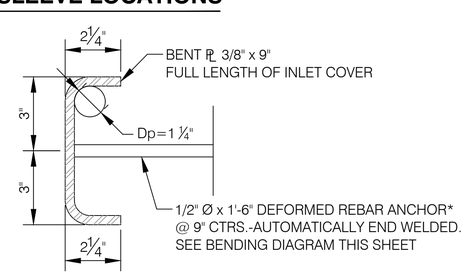

FACE ARMOR DETAIL- ALTERNATE

SEE NOTE 3

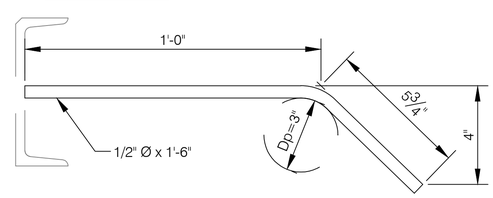

DEFORMED REBAR ANCHOR

NOTES

1. THREADED LIFTING INSERT COILS SHALL BE FLARED THIN SLAB TYPE F-63, ¾" Ø x 3 ½" LONG AS MANUFACTURED BY DAYTON SUPERIOR OR AN PPROVED EQUAL.
2. CONCRETE FOR COVER SHALL BE L65M WITH f'c=4000 PSI; AIR ENTRAINMENT = 6% ± 1%; W/C RATIO = 0.44 MAX.
3. THE COMPLETED FACE ARMOR/ANCHOR BAR ASSEMBLY SHALL BE HOT-DIP GALVANIZED IN ACCORDANCE WITH ASTM A153.
4. ALL REINFORCING STEEL SHALL BE DEFORMED BARS GRADE 60 IN ACCORDANCE WITH ASTM A615. EPOXY COATING SHALL BE IN ACCORDANCE WITH AASHTO M284. THE COVERING, MEASURED FROM THE FACE OF THE CONCRETE TO THE SURFACE OF ANY REINFORCING BAR SHALL BE 1 ½ INCHES.
5. EXPOSED EDGES OF COVER SHALL BE CHAMFERED.
6. CONTRACTOR/MANUFACTURER CERTIFIES THAT THE CURB INLET TOPS INSTALLED ON THIS PROJECT HAVE BEEN CONSTRUCTED IN ACCORDANCE WITH THE LATEST VERSION OF CITY OF OMAHA STANDARD PLATES 700-21AND 700-30. CONTRACTOR/MANUFACTURER FURTHER WARRANTS THE INLET TOPS FROM FAILURE DUE TO IMPROPER CONSTRUCTION OR MATERIALS FOR A PERIOD OF 5-YEARS FROM THE DATE OF INSTALLATION. ALL INLET TOPS SHALL BE STAMPED WITH THE NAME OF THE MANUFACTURER AND DATE OF MANUFACTURE. THE STAMP SHALL BE IN THE FORM OF A READABLE IMPRESSION LOCATED ON THE TOP OF THE INLET, CENTERED BETWEEN THE FRONT OF THE INLET AND THE MANHOLE RING.
7. CONTRACTOR MUST OBTAIN THE "NO DUMPING-DRAINS TO WATERWAY" MARKER FROM: KEEP OMAHA BEAUTIFUL, OMAHA DOUGLAS CIVIC CENTER, 1819 FARNAM ST, SUITE 306; OMAHA, NE, 68183, (402) 444-7774
8. REINFORCING SHALL BE PLACED WITH A TOLERANCE OF -1/4" AND +1/2" ON CLEARANCE.

DESIGN ENGINEER	CITY OF OMAHA PUBLIC WORKS DEPARTMENT	
CITY ENGINEER	REINFORCED CONCRETE CURB INLET COVER WITH FACE ARMOR TYPE FA	STANDARD PLATE 700-30 SHEET 1/1 ISSUE DATE: ..... DECEMBER 10, 2013

L:\Engineering\01101\02\DOCUMENTS\Standard Plates\ACAD Files from City\REVISED PLATE NUMBERS\PLT-700-30.dwg, 3/6/2014 2:48:27 PM, rick4, 1:1.0241, Lamp, Ryneerson & Associates

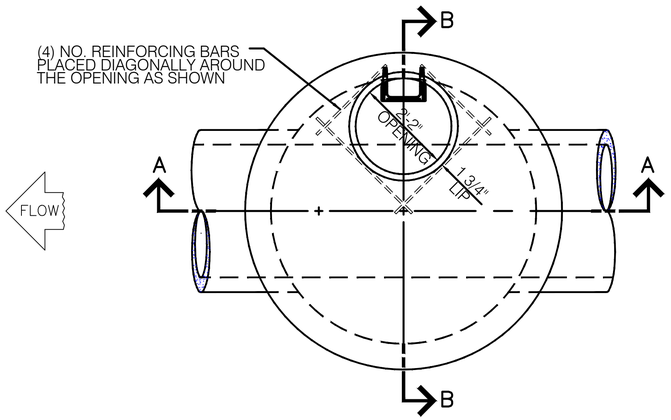

PLAN VIEW
SHOWN WITHOUT RISER SECTION

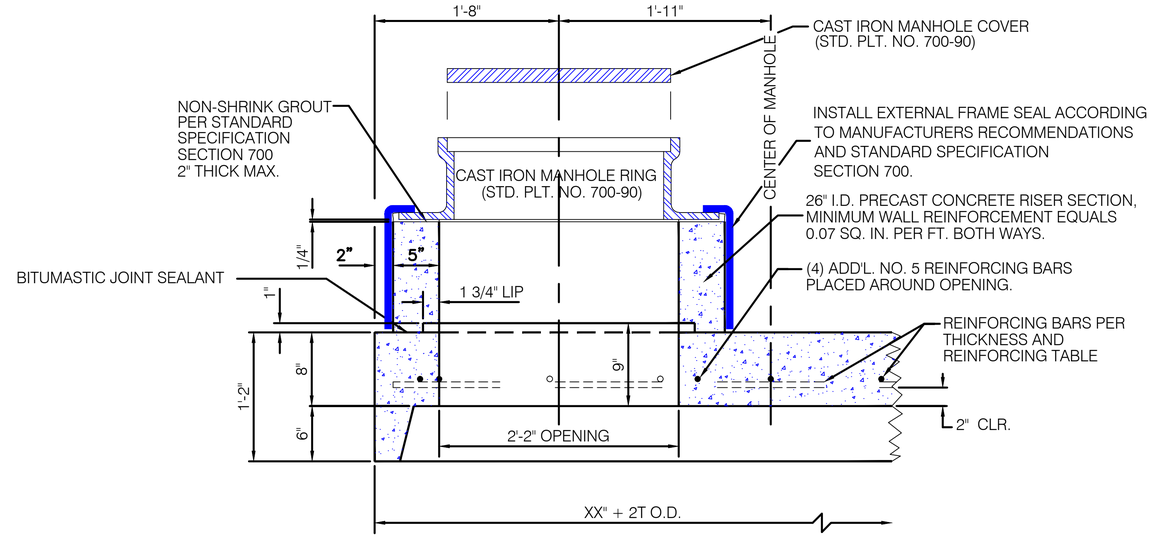

PARTIAL SECTION
REINF. CONCRETE TOP

THICKNESS AND REINFORCING TABLE

MH DIA	WALL THICK	TOP AND BOTTOM SLAB REINFORCING
XX"	T	BAR SIZE, SPACING
54"	5.5"	NO. 4 @ 6" C.-C.
60"	6"	NO. 4 @ 6" C.-C.
72"	7"	NO. 5 @ 7 1/2" C.-C.
84"	8"	NO. 5 @ 6 1/2" C.-C.
96"	9"	NO. 5 @ 6 1/2" C.-C.

NOTES

1. CONCRETE SHALL BE IN ACCORDANCE WITH SECTION 700 OF THE STANDARD SPECIFICATIONS.
2. THE INVERT OF THE MANHOLE SHALL BE MONOLITHICALLY POURED CONCRETE.
3. UNLESS OTHERWISE INDICATED IN THE CONTRACT DOCUMENTS "BIRD BATH" STYLE CAST-IN-PLACE MANHOLE BASE CONSTRUCTION SHALL BE PERMITTED.
4. WHERE REINFORCING BARS ARE USED, THE STEEL SHALL BE DEFORMED BARS. THE COVERING, MEASURED FROM THE FACE OF CONCRETE TO THE SURFACE OF ANY REINFORCING BAR SHALL BE TWO INCHES UNLESS OTHERWISE NOTED.
5. REINFORCING SHALL BE PLACED WITH A TOLERANCE OF -1/4" AND +1/2" ON CLEARANCE.
6. PRECAST CONCRETE MANHOLE SECTIONS SHALL BE MANUFACTURED IN ACCORDANCE WITH SECTION 700 OF THE STANDARD SPECIFICATIONS AND WALL THICKNESS SHALL BE AS SHOWN IN TABLE.
7. PRECAST CONCRETE MANHOLE JOINTS SHALL BE CONSTRUCTED IN ACCORDANCE WITH SECTION 700 OF THE STANDARD SPECIFICATIONS
8. PRECAST CONCRETE MANHOLES WITH PIPE OPENINGS SHALL HAVE CONCRETE COLLARS CONSTRUCTED AT THE MANHOLE CONNECTION PER STANDARD PLATE 700-23.
9. FOR MANHOLES GREATER THAN 20'-0" IN DEPTH, THE STRUCTURE SHALL BE DESIGNED BY A PROFESSIONAL ENGINEER LICENSED IN THE STATE OF NEBRASKA.
10. RISER SECTIONS SHALL BE OF THE LARGEST VERTICAL DIMENSION POSSIBLE.
11. FOR MANHOLES USING BITUMASTIC JOINT SEALANT, EXTERNAL SEALING WRAP SHALL BE INSTALLED ON EACH JOINT.

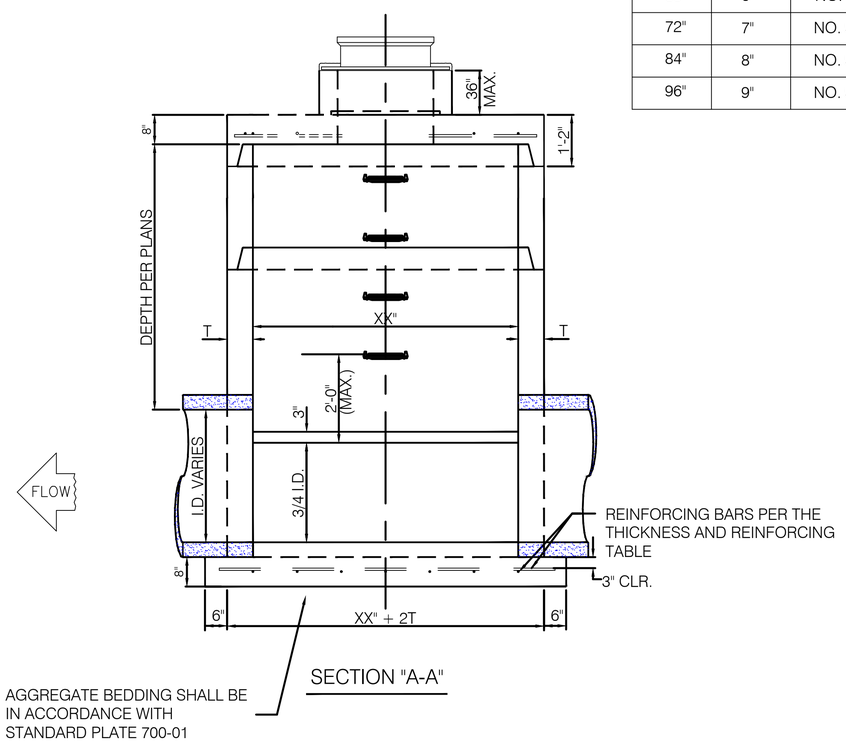

SECTION "A-A"

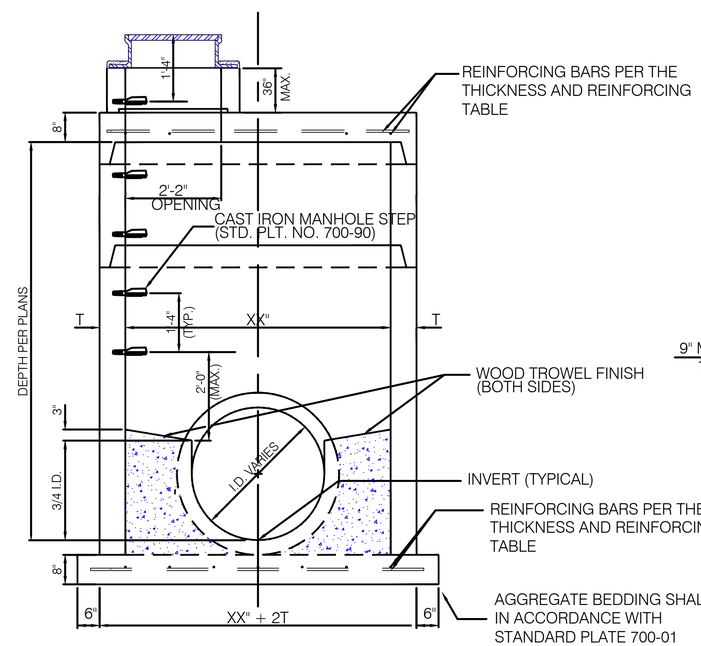

SECTION "B-B"

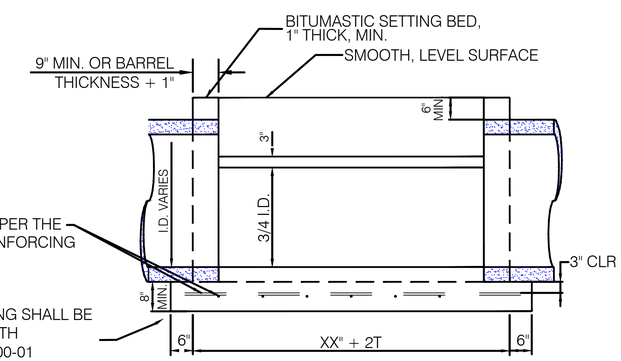

BIRDBATH DETAIL SEE NOTE 3

DESIGN ENGINEER	CITY OF OMAHA PUBLIC WORKS DEPARTMENT	
CITY ENGINEER	STORM SEWER MANHOLE	STANDARD PLATE 700-40 — SHEET 1/1 — ISSUE DATE: ... DECEMBER 10, 2013

L:\Engineering\011010\DOCUMENTS\Standard Plates\ACAD Files from City\REVISED PLATE NUMERS\PLT-700-40.dwg, 3/20/2014 1:43:31 PM, rrdik, 11.03774, Lamp, Rynearson & Associates

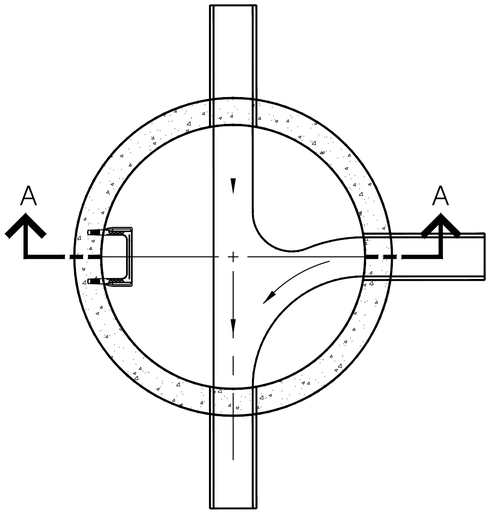

STANDARD 54" MANHOLE

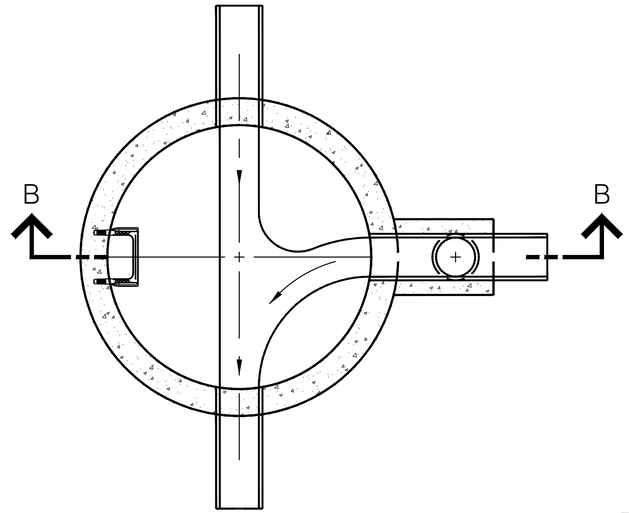

MANHOLE DROP CONNECTION

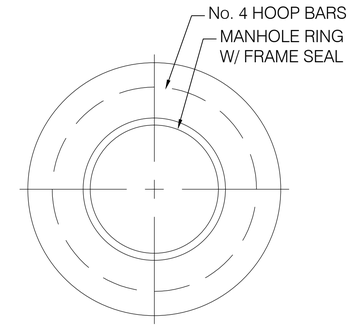

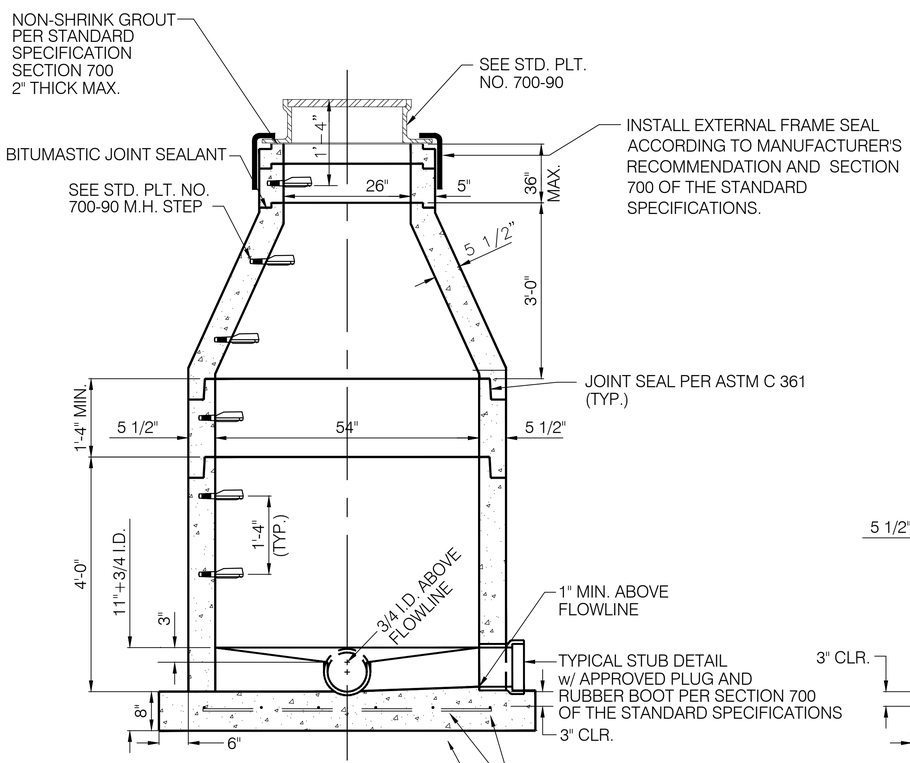

SECTION "A-A"

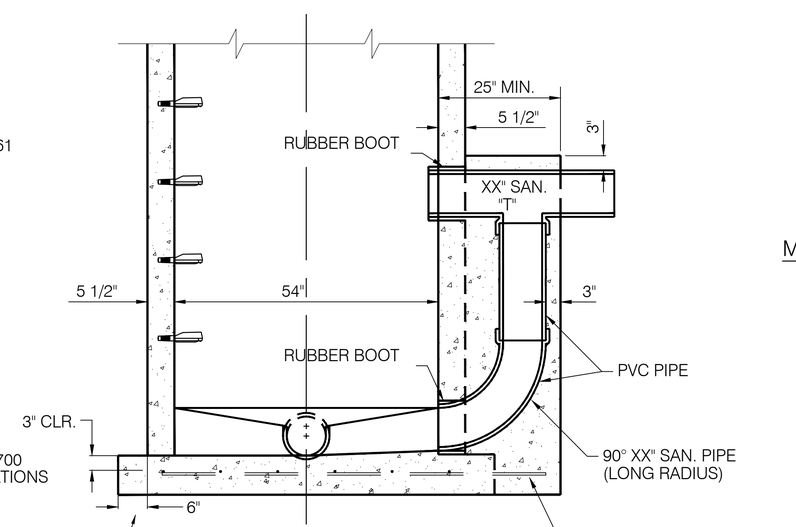

SECTION "B-B"

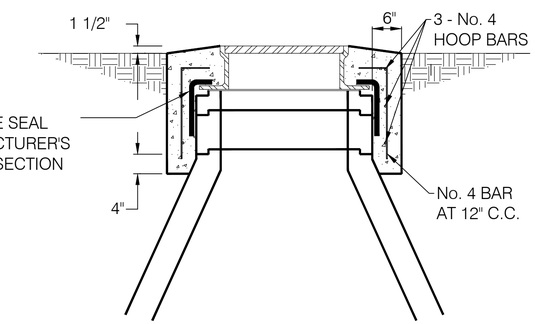

NOTES:

1. DO NOT PLACE 4" ADJUSTING RING ON MANHOLES WITH MANHOLE RING COLLARS

2. MANHOLE RING COLLARS SHALL BE CONSTRUCTED IN LOCATIONS OUTSIDE OF PAVED AREAS; LOCATIONS WITHIN RESIDENTIAL AREAS SHALL NOT HAVE MANHOLE RING COLLARS.

MANHOLE RING COLLAR DETAIL

NOTES

1. MANHOLES SHALL BE CONSTRUCTED OF CONCRETE. ALL MANHOLES ARE TO BE CONSTRUCTED CIRCULAR AND CONCENTRIC IN PLAN SIMILAR TO DRAWING. CONCRETE IN MANHOLES SHALL BE IN ACCORDANCE WITH SECTION 700 OF THE STANDARD SPECIFICATIONS. THE INVERT OF THE MANHOLE SHALL BE MONOLITHICALLY POURED CONCRETE.
2. WHEN PRE-CAST CONCRETE MANHOLE SECTIONS ARE USED, JOINTS SHALL BE IN ACCORDANCE WITH SECTION 700 OF THE STANDARD SPECIFICATIONS.
3. DROP CONNECTIONS ARE REQUIRED FOR SANITARY SEWERS WHEN IT IS NECESSARY THAT SANITARY FLOW ENTER A MANHOLE AT A HEIGHT OF MORE THAN TWO FT. ABOVE THE MANHOLE'S FLOWLINE. DROPS SHALL BE EXTERNAL DROP CONNECTIONS.
4. THE INVERT SHALL BE FORMED AND POURED TO THE THREE QUARTER POINT OF THE PIPE I.D.
5. FOR MANHOLES LESS THAN 7'-0" IN DEPTH, THE 54" INSIDE DIA. BARREL SHALL BE CARRIED TO THE SURFACE AND CONSTRUCTED WITH A FLATTOP MANHOLE COVER AS SHOWN ON SHEET 2 OF THIS PLATE.
6. FOR MANHOLES GREATER THAN 20'-0" IN DEPTH, THE STRUCTURE SHALL BE DESIGNED BY A PROFESSIONAL ENGINEER LICENSED IN THE STATE OF NABRASKA.
7. DETAILS ARE APPLICABLE FOR PIPE DIAMETERS UP TO 24" AT A 90-DEGREE ANGLE. FOR LARGER PIPE, REFER TO SHEET 2 OF THIS PLATE.
8. MANHOLES IN BUOYANT CONDITIONS SHALL BE DESIGNED BY AN ENGINEER LICENSED IN THE STATE OF NEBRASKA.
9. RISER SECTIONS SHALL BE OF THE LARGEST VERTICAL DIMENSION POSSIBLE.
10. MANHOLES SHALL BE VACUUM TESTED IN ACCORDANCE WITH STANDARD SPECIFICATION SECTION 700.
11. REINFORCING SHALL BE PLACED WITH A TOLERANCE OF -1/4" AND +1/2" ON CLEARANCE.

		DESIGN ENGINEER	CITY OF OMAHA PUBLIC WORKS DEPARTMENT
		CITY ENGINEER	SANITARY SEWER MANHOLE — STANDARD PLATE 700-45 — SHEET 1/2 — ISSUE DATE: ... DECEMBER 10, 2013

L:\Engineering\011010\DOCUMENTS\Standard Plates\ACAD Files from City\REVISED PLATE NUMERS\PL-T-700-45 (1).dwg, 3/13/2014 1:57:51 PM, rick, 11.0241, Lamp, Rynearson & Associates

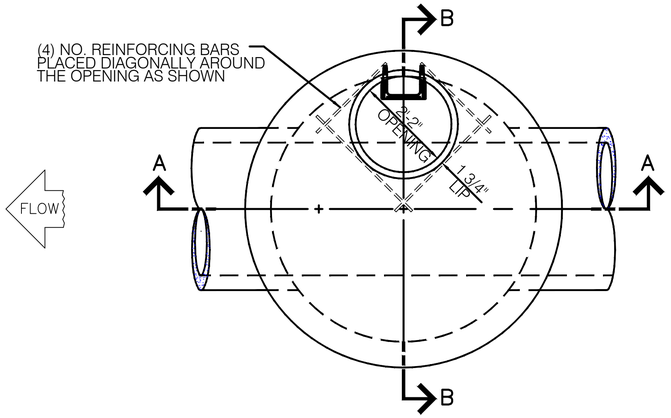

PLAN VIEW
SHOWN WITHOUT RISER SECTION

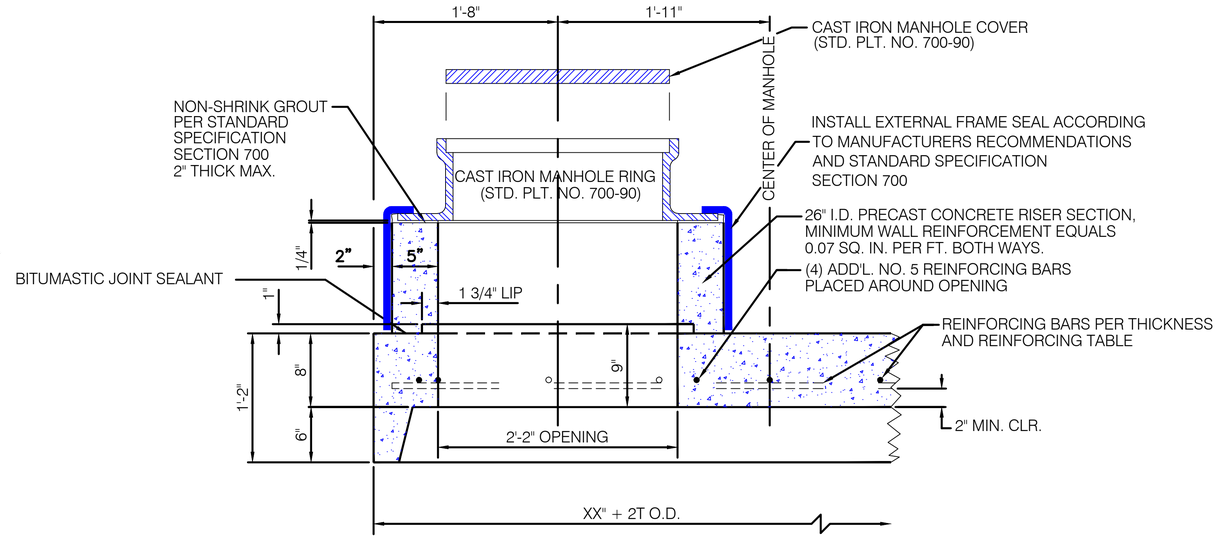

PARTIAL SECTION
REINF. CONCRETE TOP

THICKNESS AND REINFORCING TABLE
FOR 60" I.D. AND GREATER

MH DIA	WALL THICK	TOP AND BOTTOM SLAB REINFORCING
XX"	T	BAR SIZE, SPACING
60"	6"	NO. 4 @ 6" C.-C.
72"	7"	NO. 5 @ 7 1/2" C.-C.
84"	8"	NO. 5 @ 6 1/2" C.-C.
96"	9"	NO. 5 @ 6 1/2" C.-C.

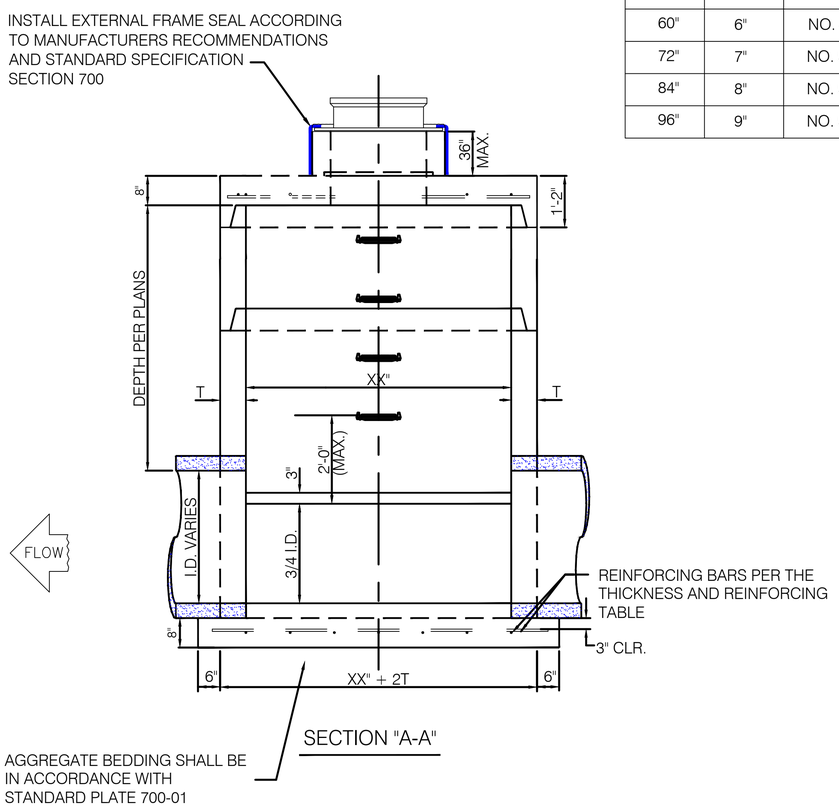

SECTION "A-A"

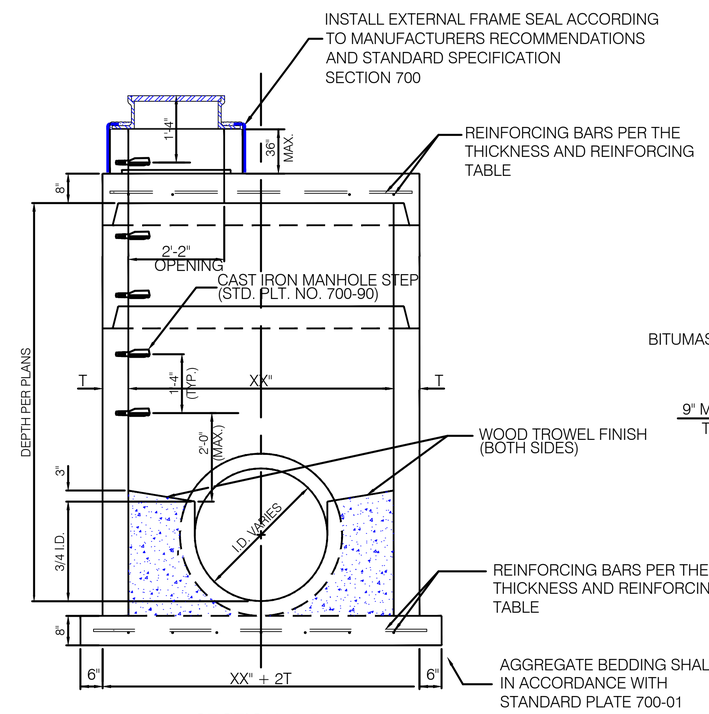

SECTION "B-B"

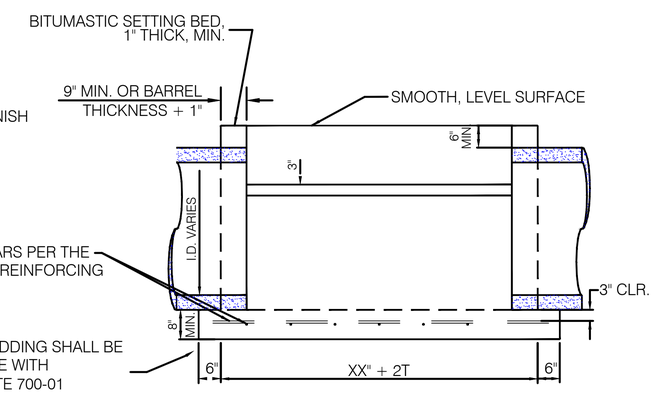

BIRDBATH DETAIL SEE NOTE 3

NOTES

1. CONCRETE SHALL BE IN ACCORDANCE WITH SECTION 700 OF THE STANDARD SPECIFICATIONS.
2. THE INVERT OF THE MANHOLE SHALL BE MONOLITHICALLY POURED CONCRETE.
3. UNLESS OTHERWISE INDICATED IN THE CONTRACT DOCUMENTS "BIRD BATH" STYLE CAST-IN-PLACE MANHOLE BASE CONSTRUCTION SHALL BE PERMITTED.
4. WHERE REINFORCING BARS ARE USED, THE STEEL SHALL BE DEFORMED BARS. THE COVERING, MEASURED FROM THE FACE OF CONCRETE TO THE SURFACE OF ANY REINFORCING BAR SHALL BE TWO INCHES UNLESS OTHERWISE NOTED.
5. REINFORCING SHALL BE PLACED WITH A TOLERANCE OF -1/4" AND +1/2" ON CLEARANCE.
6. PRECAST CONCRETE MANHOLE SECTIONS SHALL BE MANUFACTURED IN ACCORDANCE WITH SECTION 700 OF THE STANDARD SPECIFICATIONS AND WALL THICKNESS SHALL BE AS SHOWN IN TABLE.
7. PRECAST CONCRETE MANHOLE JOINTS SHALL BE CONSTRUCTED IN ACCORDANCE WITH SECTION 700 OF THE STANDARD SPECIFICATIONS
8. PRECAST CONCRETE MANHOLES WITH PIPE OPENINGS SHALL HAVE CONCRETE COLLARS CONSTRUCTED AT THE MANHOLE CONNECTION PER STANDARD PLATE 700-23.
9. FOR MANHOLES GREATER THAN 20'-0" IN DEPTH, THE STRUCTURE SHALL BE DESIGNED BY A PROFESSIONAL ENGINEER LICENSED IN THE STATE OF NEBRASKA.
10. RISER SECTIONS SHALL BE OF THE LARGEST VERTICAL DIMENSION POSSIBLE.
11. MANHOLES SHALL BE VACUUM TESTED IN ACCORDANCE WITH STANDARD SPECIFICATION SECTION 700.
12. DROP CONNECTIONS ARE REQUIRED FOR SANITARY SEWERS WHEN IT IS NECESSARY THAT SANITARY FLOW ENTER A MANHOLE AT A HEIGHT OF MORE THAN TWO FT. ABOVE THE MANHOLE'S FLOWLINE. DROPS SHALL BE EXTERNAL DROP CONNECTIONS.

		DESIGN ENGINEER	CITY OF OMAHA PUBLIC WORKS DEPARTMENT
		CITY ENGINEER	SANITARY SEWER MAHOLE — STANDARD PLATE 700-45 — SHEET 2/2 — ISSUE DATE: ... DECEMBER 10, 2013

L:\Engineering\011\0102\DOCUMENTS\Standard Plates\ACAD Files from City\REVISED PLATE NUMBERS\PLT-700-45 (2).dwg, 3/20/2014 1:45:38 PM, rdsk, 1:1.0377A, Lamp, Rynearson & Associates

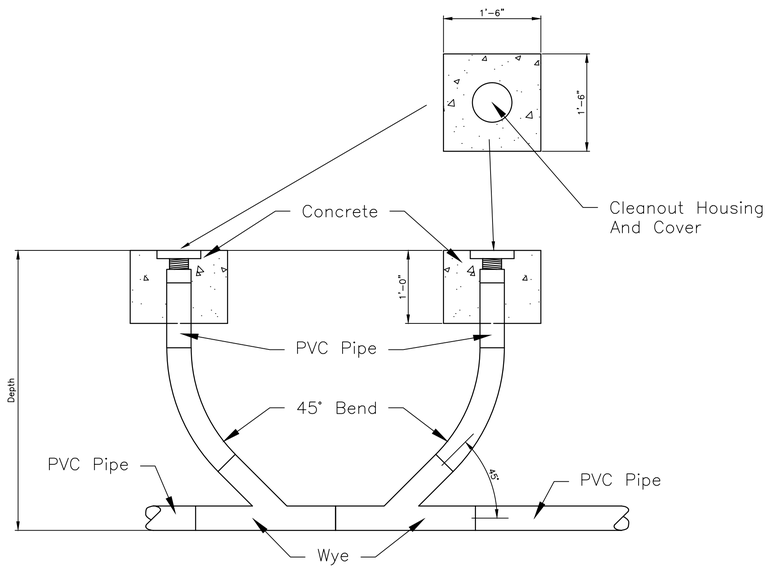

2-WAY CLEANOUT DETAIL

No Scale

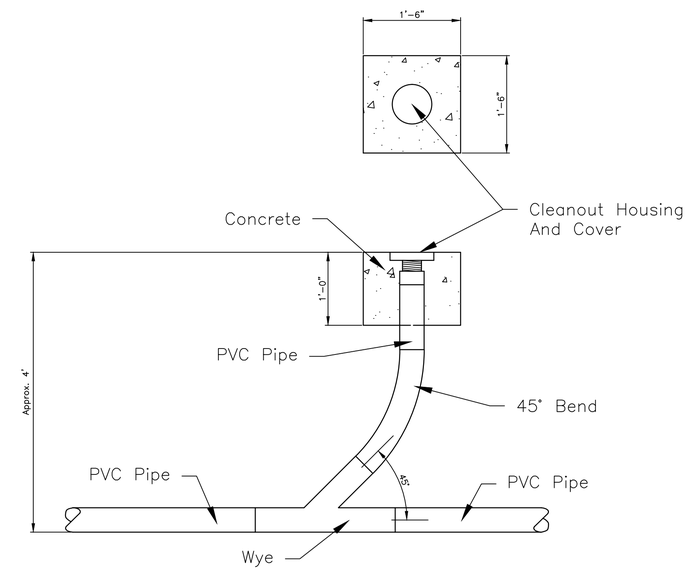

CLEANOUT DETAIL

No Scale

			CITY OF OMAHA PUBLIC WORKS DEPARTMENT
		DESIGN ENGINEER	SANITARY SEWER CLEAN-OUT — STANDARD PLATE 700-50 — SHEET 1/1
		CITY ENGINEER	ISSUE DATE: ... DECEMBER 10, 2013

L:\Engineering\01\10\02\DOCUMENTS\Standard Plates\ACAD Files from City\REVISED PLATE NUMERS\PL7-700-50.dwg, 2/15/2014 5:51:05 AM, rdsk, 1:1.03774, Lamp, Rynearson & Associates

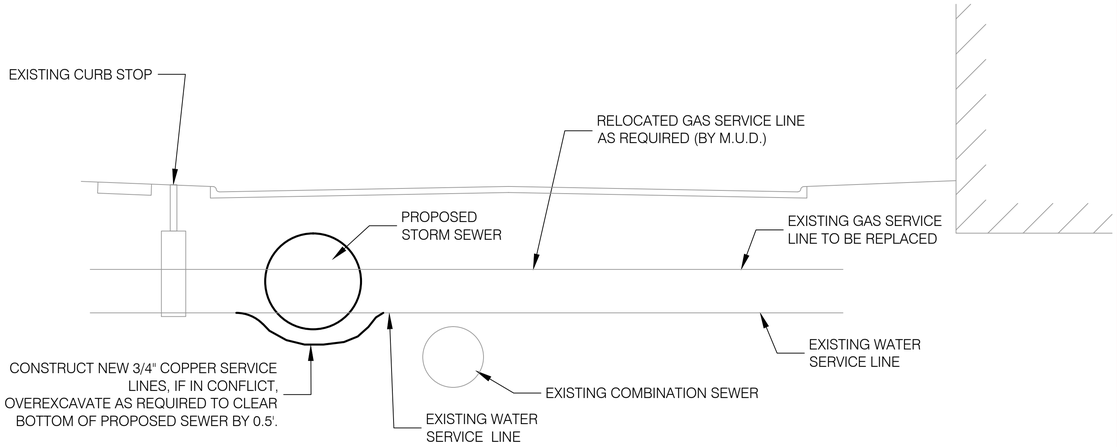

UTILITY RELOCATION DETAIL (TYPICAL)

NO SCALE

NOTE: CONTRACTOR SHALL BE FAMILIAR WITH M.U.D. RULES AND REGULATIONS PERTAINING TO LEAD SERVICE LINES.

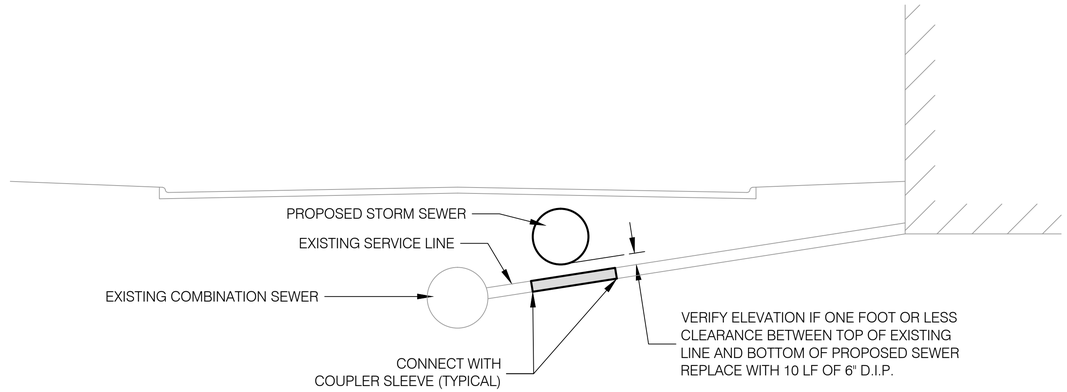

6" SANITARY SEWER SERVICE RECONNECTION DETAIL (TYPICAL) - EXAMPLE 3

NO SCALE

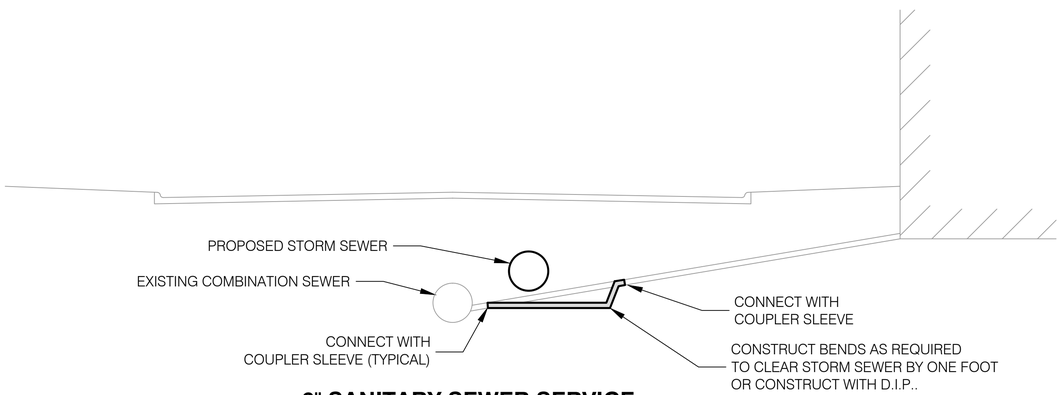

6" SANITARY SEWER SERVICE RECONNECTION DETAIL (TYPICAL) - EXAMPLE 1

NO SCALE

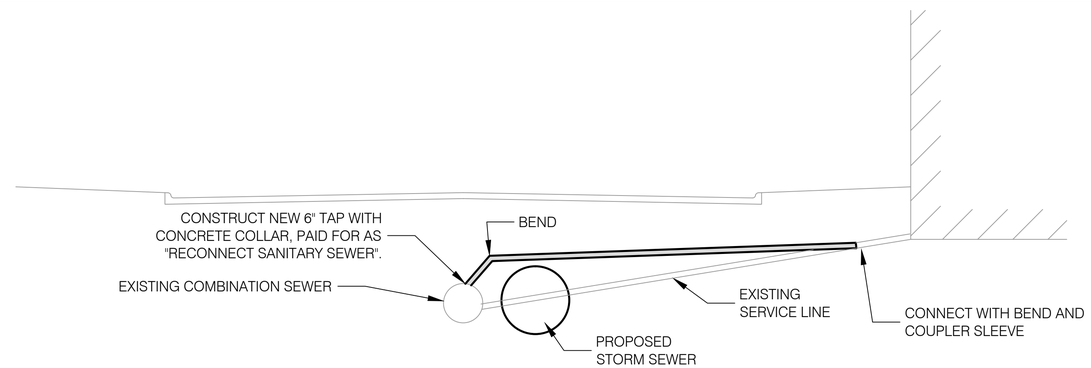

6" SANITARY SEWER SERVICE RECONNECTION DETAIL (TYPICAL) - EXAMPLE 4

NO SCALE

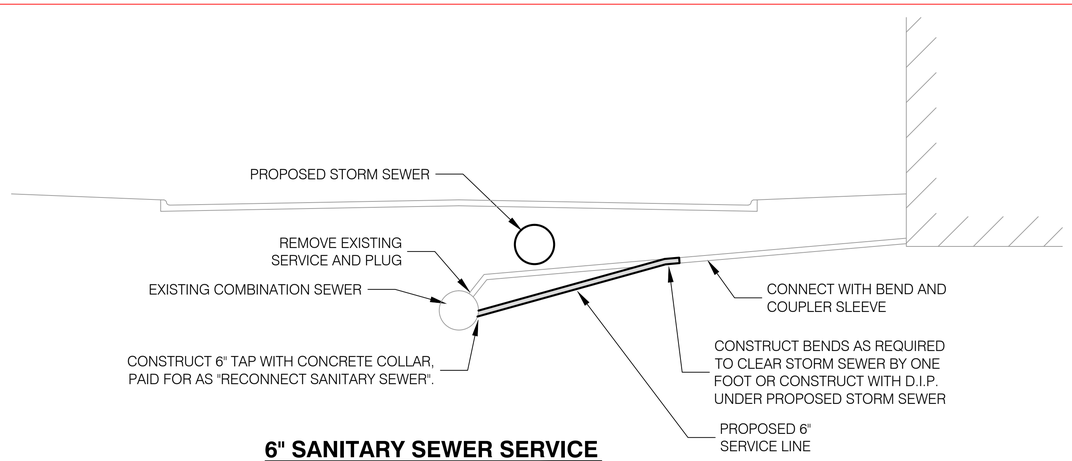

6" SANITARY SEWER SERVICE RECONNECTION DETAIL (TYPICAL) - EXAMPLE 2

NO SCALE

SANITARY SEWER SERVICE RECONNECTION NOTES

1. SERVICES ARE TO BE RE-LAID AT A 1% SLOPE MIN.
2. IF POSSIBLE THE SERVICES ARE TO BE RE-LAID AT 2% OR GREATER.

NOTES

1. EXAMPLE 1 PAID FOR AS "CONSTRUCT 6" D.I.P. OR CONSTRUCT 6" SANITARY SEWER PIPE". NO PAYMENT FOR "RECONNECT SANITARY SEWER".
2. EXAMPLE 2 PAID FOR AS "RECONNECT SANITARY SERVICE" FOR TAPPING INTO EXISTING COMBINED SEWER. ADDITIONAL 6" PIPE MAY BE REQUIRED, PAID FOR AS "CONSTRUCT 6" D.I.P." OR "CONSTRUCT 6" SANITARY SEWER PIPE".
3. EXAMPLE 3 PAID FOR AS "CONSTRUCT 6" D.I.P.". NO PAYMENT FOR "RECONNECT SANITARY SEWER SERVICE".
4. EXAMPLE 4 PAID FOR AS "RECONNECT SANITARY SERVICE" FOR TAPPING INTO EXISTING COMBINED SEWER. ADDITIONAL 6" PIPE MAY BE REQUIRED, PAID FOR AS "CONSTRUCT 6" SANITARY SEWER PIPE".

		DESIGN ENGINEER	CITY OF OMAHA PUBLIC WORKS DEPARTMENT
		CITY ENGINEER	SANITARY SEWER SERVICE RECONNECTION/RELOCATION

STANDARD PLATE **700-55** SHEET 1/1

ISSUE DATE: ..... DECEMBER 10, 2013

L:\Engineering\011\0102\DOCUMENTS\Standard Plates\ACAD Files from City\REVISED PLATE NUMERS\PLT-700-55.dwg, 3/6/2014 1:53:58 PM, rck4, 1:1.0241, Lamp, Rynearson & Associates

FLARED END SECTIONS

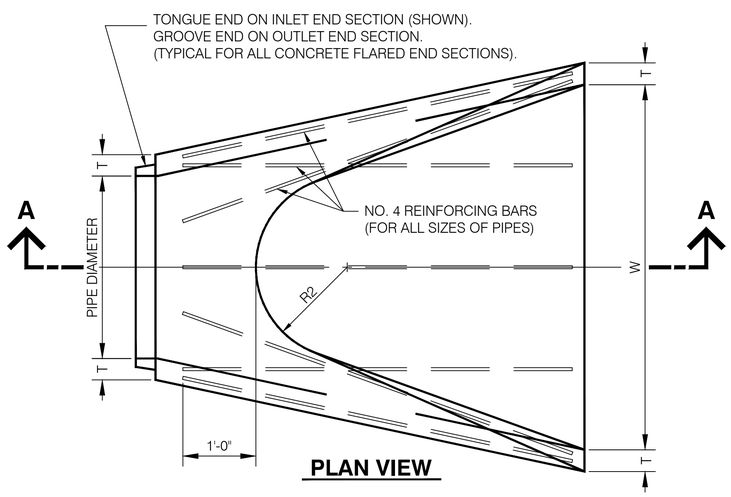

PLAN VIEW

FLARED END SECTIONS (NOMINAL DIMENSIONS)									
PIPE DIAMETER	L ± 6"	Y	X ± 4 1/2"	Z	W ± 2"	R1	R2	S APPROX.	T MIN.
12"	6'-0 7/8"	2'-0"	4'-0 7/8"	4"	2'-0"	1'-0 1/8"	9"	3	2"
15"	6'-1"	2'-3"	3'-10"	6"	2'-6"	1'-0 1/2"	11"	3	2 1/4"
18"	6'-1"	2'-3"	3'-10"	9"	3'-0"	1'-3 1/2"	1'-0"	3	2 1/2"
24"	6'-1 1/2"	3'-7 1/2"	2'-6"	9 1/2"	4'-0"	1'-4 13/16"	1'-2"	3	3"
30"	6'-1 3/4"	4'-6"	1'-7 3/4"	1'-0"	5'-0"	1'-6 1/2"	1'-3"	3	3 1/2"
36"	8'-1 3/4"	5'-3"	2'-10 3/4"	1'-3"	6'-0"	2'-0 5/16"	1'-8"	3	4"
42"	8'-2"	5'-3"	2'-11"	1'-9"	6'-6"	2'-3 1/2"	1'-10"	3	4 1/2"
48"	8'-2"	6'-0"	2'-2"	2'-0"	7'-0"	2'-4 1/2"	1'-10"	3	5"
54"	8'-4"	5'-5"	2'-11"	2'-3"	7'-6"	2'-9 1/8"	2'-0"	2.4	5 1/2"
60"	8'-3"	5'-0"	3'-3"	2'-6"	8'-0"	3'-0 11/16"	2'-0"	2	6"
66"	8'-3"	6'-6"	1'-9"	2'-6"	9'-0"	3'-0 1/8"	2'-0"	2	6 1/2"
72"	8'-3"	6'-6"	1'-9"	2'-6"	9'-0"	3'-2 15/16"	2'-0"	2	7"

BAR GRATE DATA (NOMINAL DIMENSIONS)								
PIPE DIAMETER	A	B	C	D	E	"F" BARS	G	H
15"	5"	4	2'-0"	6"	-	5/8" Ø	2'-11"	1'-4"
18"	8"	5	2'-6"	6"	-	5/8" Ø	3'-6"	1'-4"
24"	8 1/2"	7	3'-6"	9"	-	5/8" Ø	4'-7"	1'-8"
30"	11"	9	4'-6"	12"	1'-6"	5/8" Ø	5'-8"	1'-8"
36"	14"	11	5"-6"	12"	1'-6"	3/4" Ø	6'-9"	2'-0"
42"	9"	12	6'-0"	12"	1'-6"	1" Ø	7'-4"	2'-0"
48"	9"	12	6'-6"	12"	1'-6"	1" Ø	7'-11"	2'-0"

BAR GRATES

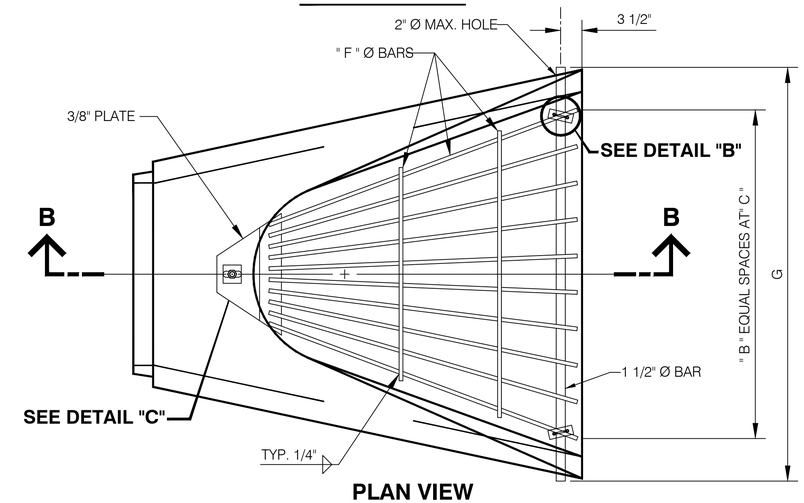

PLAN VIEW

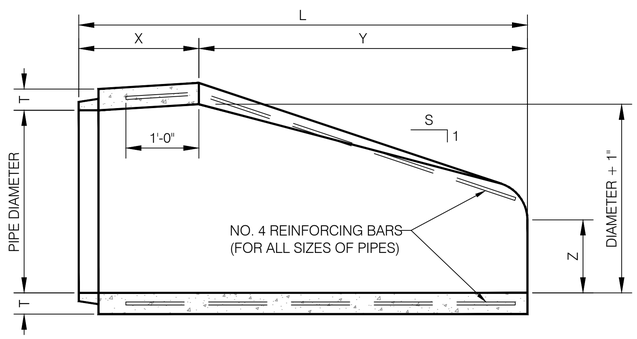

SECTION "A-A"

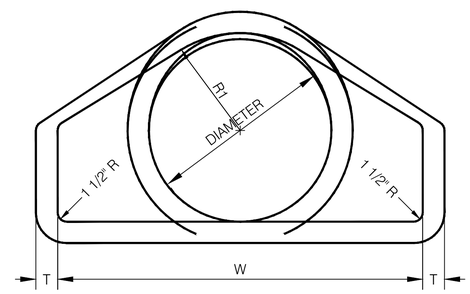

END ELEVATION

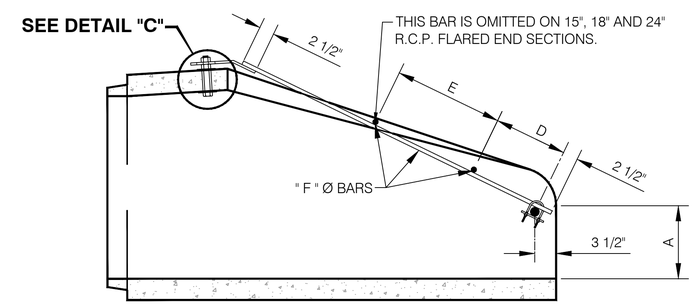

SECTION "B-B"

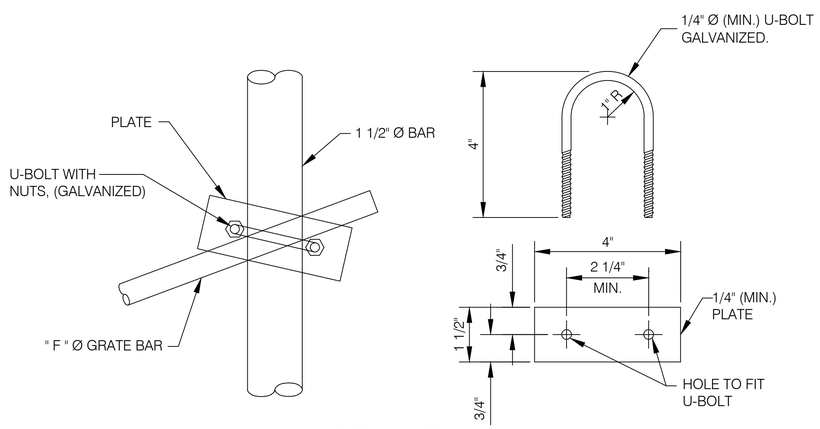

DETAIL "B"
U-BOLT ASSEMBLY

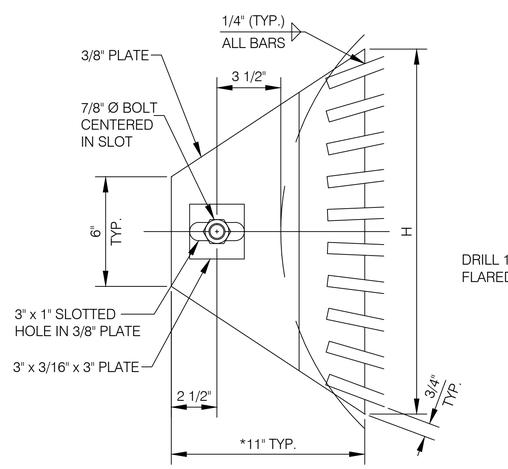

* DIMENSION OF PLATE BEFORE BENDING

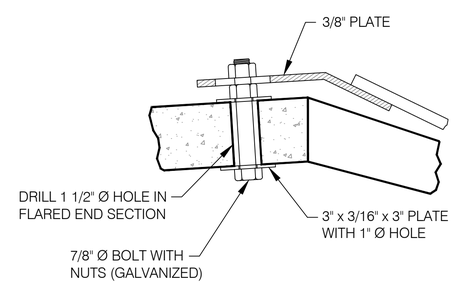

DETAIL "C"

NOTES

1. CONCRETE FOR FLARED END SECTIONS AND REINFORCEMENT IN THE AREA DIMENSIONED AS "X" SHALL CONFORM TO THE APPLICABLE REQUIREMENTS OF A.A.S.H.T.O. DESIGNATION M170, M206, AND M207, FOR CLASS 2 PIPE.
2. IN ADDITION TO THE REINFORCING BARS SHOWN, REINFORCEMENT IN THE AREA DIMENSIONED AS "Y" SHALL HAVE A CROSS-SECTIONAL AREA EQUAL TO THAT OF ONE LAYER OF STEEL IN THE AREA DIMENSIONED AS "X".
3. ALL STEEL SHALL CONFORM TO THE REQUIREMENTS OF A.S.T.M. A615 GRADE 1020 STEEL.
4. THREE SEPARATE COATS OF PAINT SHALL BE APPLIED TO ALL UNGALVANIZED STEEL MATERIAL. THE FIRST TWO COATS SHALL BE INORGANIC ZINC RICH PRIMER AND THE THIRD COAT SHALL BE HI-BUILD VINYL GREEN BRIDGE PAINT BOTH THE INORGANIC ZINC PRIMER AND THE VINYL TOPCOAT SHALL BE APPLIED SO EACH COAT WILL PROVIDE AN AVERAGE DRY FILM THICKNESS OF AT LEAST 3 MILS. MINIMUM DRY FILM THICKNESS MEASURED AT ANY POINT FOR EACH COAT SHALL BE 2.5 MILS. ALL PAINTING MAY BE DONE IN THE SHOP, UNLESS OTHERWISE SPECFIED. BARS AND PLATES SHALL BE GALVANIZED OR PAINTED.
5. GALVANIZATION SHALL BE IN ACCORDANCE WITH A.S.T.M. A123.

DESIGN ENGINEER	CITY OF OMAHA PUBLIC WORKS DEPARTMENT	
	FLARED END SECTIONS AND BAR GRATES	STANDARD PLATE 700-70 — SHEET 1/1
CITY ENGINEER		ISSUE DATE: ..... DECEMBER 10, 2013

L:\Engineering\01101\DOCUMENTS\Standard Plates\ACAD Files from City\REVISED PLATE NUMERS\PLT-700-70.dwg, 2/19/2014 8:57:26 AM, rick. 1:1.0374, Lamp, Rynearson & Associates

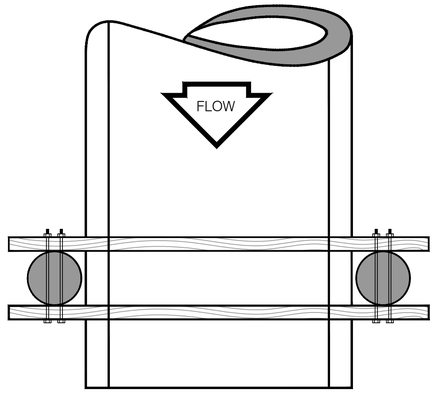

PLAN AT OUTLET

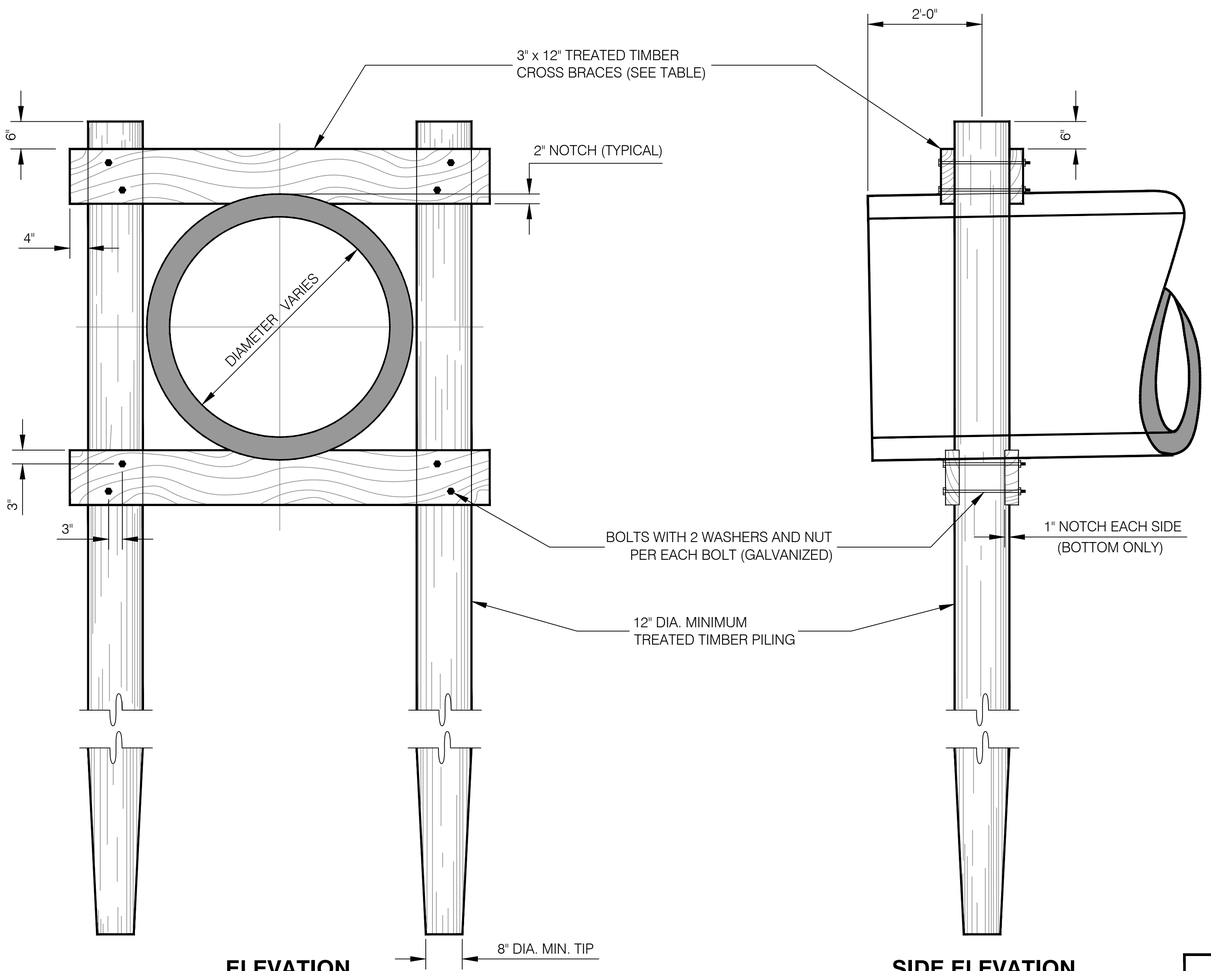

ELEVATION

SIDE ELEVATION

PIPE SIZE	PILE LENGTH	MINIMUM PILE LENGTH DRIVEN	BOTTOM CROSS BRACES	
			REQUIRED 3"x12"	BOLTS
15" - 27"	20'	15'	2	(4) 3/4" Ø
30" - 48"	25'	17.5'	2	(4) 3/4" Ø
54" - 72"	30'	20'	4	(4) 1" Ø

NOTES

1. ALL TIMBER PILING AND CROSS BRACES SHALL BE TREATED.
2. ALL BOLTS, NUTS, AND WASHERS USED SHALL BE GALVANIZED.

DESIGN ENGINEER	CITY OF OMAHA PUBLIC WORKS DEPARTMENT	
	TIMBER PILE PIPE SUPPORT	**STANDARD PLATE 700-72** SHEET 1/1
CITY ENGINEER		ISSUE DATE: ..... DECEMBER 10, 2013

L:\Engineering\01\10\02\DOCUMENTS\Standard Plates\ACAD Files from City\REVISED PLATE NUMBERS\PL-700-72.dwg, 2/15/2014 9:00:02 AM, rdsk, 1:1.0377A, Lamp, Rynearson & Associates

STILLING BASIN DIMENSION DATA																	
PIPE SIZE		MAX. DIS-CHARGE C.F.S.	FEET AND INCHES										INCHES				
DIA. IN.	AREA (SQ. FT.)		W	H	L	a	b	c	d	e	f	g	t_w	t_f	t_b	t_p	k
18	1.77	21	5-6	4-3	7-4	3-3	4-1	2-4	0-11	0-6	1-6	2-1	6	6 1/2	6	6	3
24	3.14	38	6-9	5-3	9-0	3-11	5-1	2-10	1-2	0-6	2-0	2-6	6	6 1/2	6	6	3
30	4.91	59	8-0	6-3	10-8	4-7	6-1	3-4	1-4	0-8	2-6	3-0	6	6 1/2	7	7	3
36	7.07	85	9-3	7-3	12-4	5-3	7-1	3-10	1-7	0-8	3-0	3-6	7	7 1/2	8	8	3
42	9.62	115	10-6	8-0	14-0	6-0	8-0	4-5	1-9	0-10	3-0	3-11	8	8 1/2	9	8	4
48	12.57	151	11-9	9-0	15-8	6-9	8-11	4-11	2-0	0-10	3-0	4-5	9	9 1/2	10	8	4
54	15.90	191	13-0	9-9	17-4	7-4	10-0	5-5	2-2	1-0	3-0	4-11	10	10 1/2	10	8	4
60	19.63	236	14-3	10-9	19-0	8-0	11-0	5-11	2-5	1-0	3-0	5-4	11	11 1/2	11	8	6
72	28.27	339	16-6	12-3	22-0	9-3	12-9	6-11	2-9	1-3	3-0	6-2	12	12 1/2	12	8	6

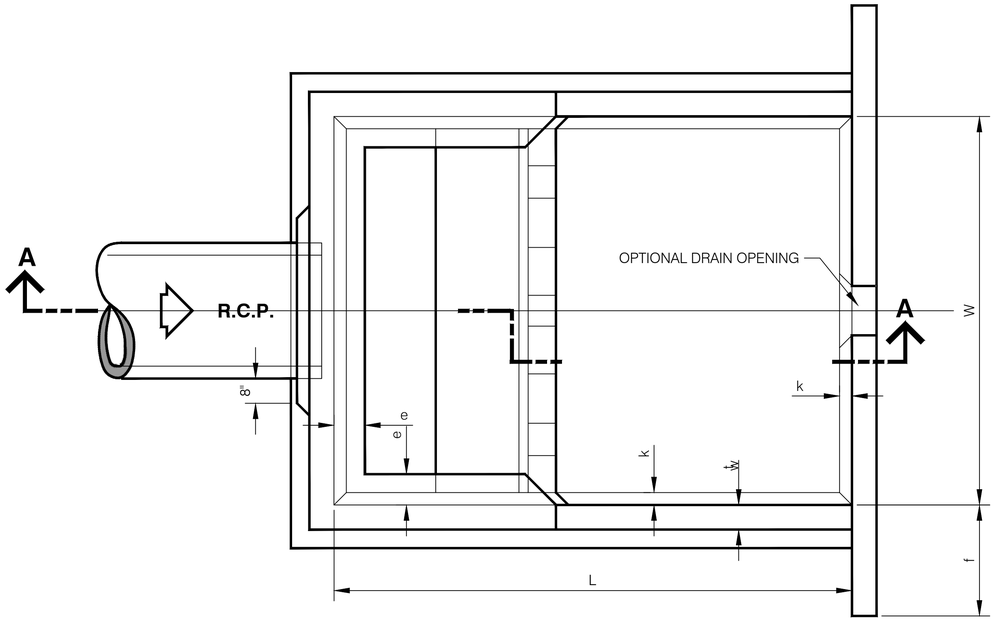

STILLING BASIN PLAN

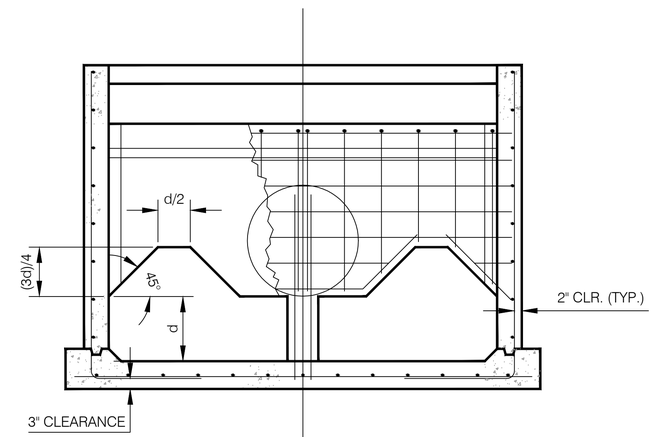

SECTION B-B

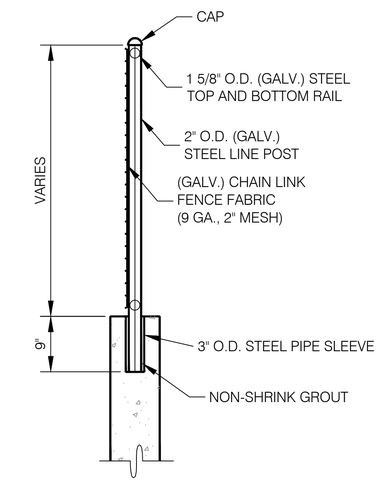

OPTIONAL FENCE DETAIL

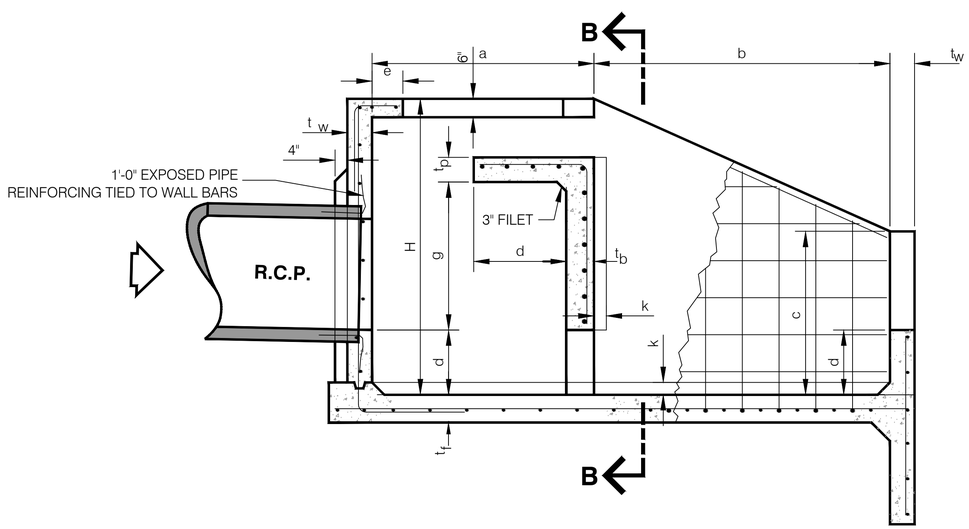

LONGITUDINAL SECTION A-A

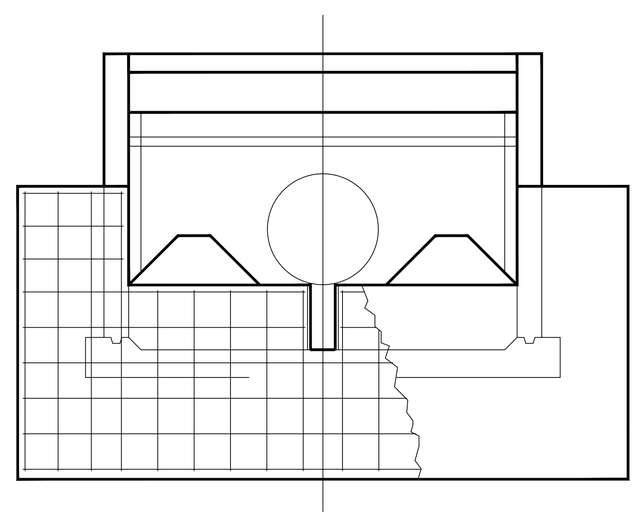

END ELEVATION

NOTES

1. CONCRETE FOR STRUCTURE SHALL BE CLASS L65M.
2. ALL EXPOSED CORNERS SHALL BE CHAMFERED 3/4".
3. ALL REINFORCING STEEL SHALL BE IN ACCORDANCE WITH ASTM A615 GRADE 60. PLACEMENT SHALL MEET THE REQUIREMENTS OF ACI 318.
4. ALL HOOKS ARE ACI STANDARD UNLESS OTHERWISE SHOWN.
5. THE COVERING, MEASURED FROM THE FACE OF THE CONCRETE TO THE SURFACE OF A REINFORCING BAR SHALL BE 3" FOR BARS NEAR THE UNDERSIDE OF THE STRUCTURE FLOOR, AND 2" FOR ALL OTHER BARS.
6. REINFORCING SHALL BE PLACED WITH A TOLERANCE OF -1/4" AND +1/2" ON CLEARANCE.

NOTE

ALL REINFORCING STEEL SHOWN FOR ILLUSTRATION ONLY.

DESIGN ENGINEER

CITY ENGINEER

CITY OF OMAHA PUBLIC WORKS DEPARTMENT

IMPACT STILLING BASIN

STANDARD PLATE **700-75** SHEET 1/1

ISSUE DATE: ... DECEMBER 10, 2013

L:\Engineering\011\0\DOCUMENTS\Standard Plates\ACAD Files from City\REVISED PLATE NUMERS\PLT-700-75.dwg, 3/6/2014 2:55:46 PM, rckk, 1:1.0241, Lamp, Rynearson & Associates

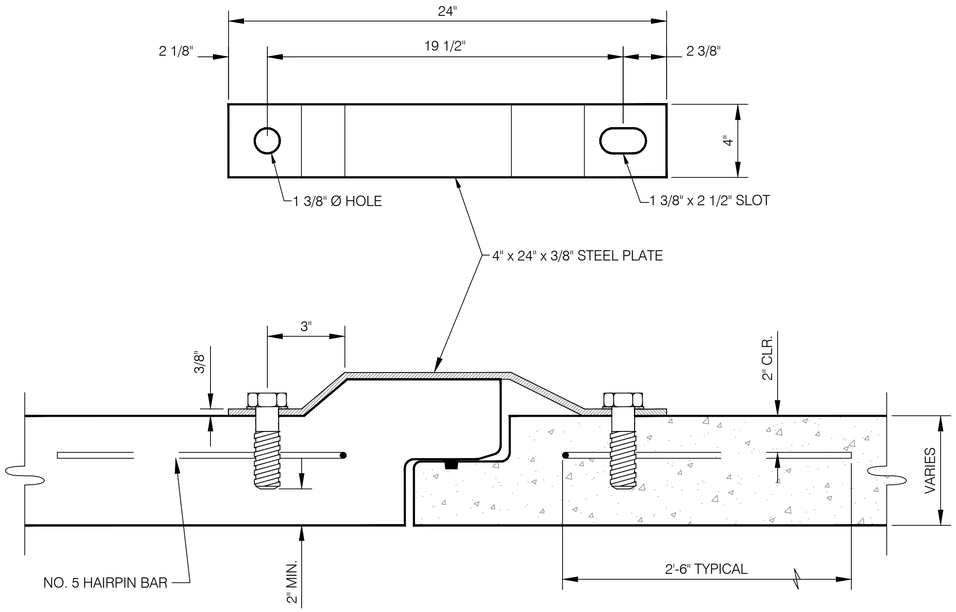

REINFORCED CONCRETE SANITARY SEWER PIPE
BELL & SPIGOT JOINT

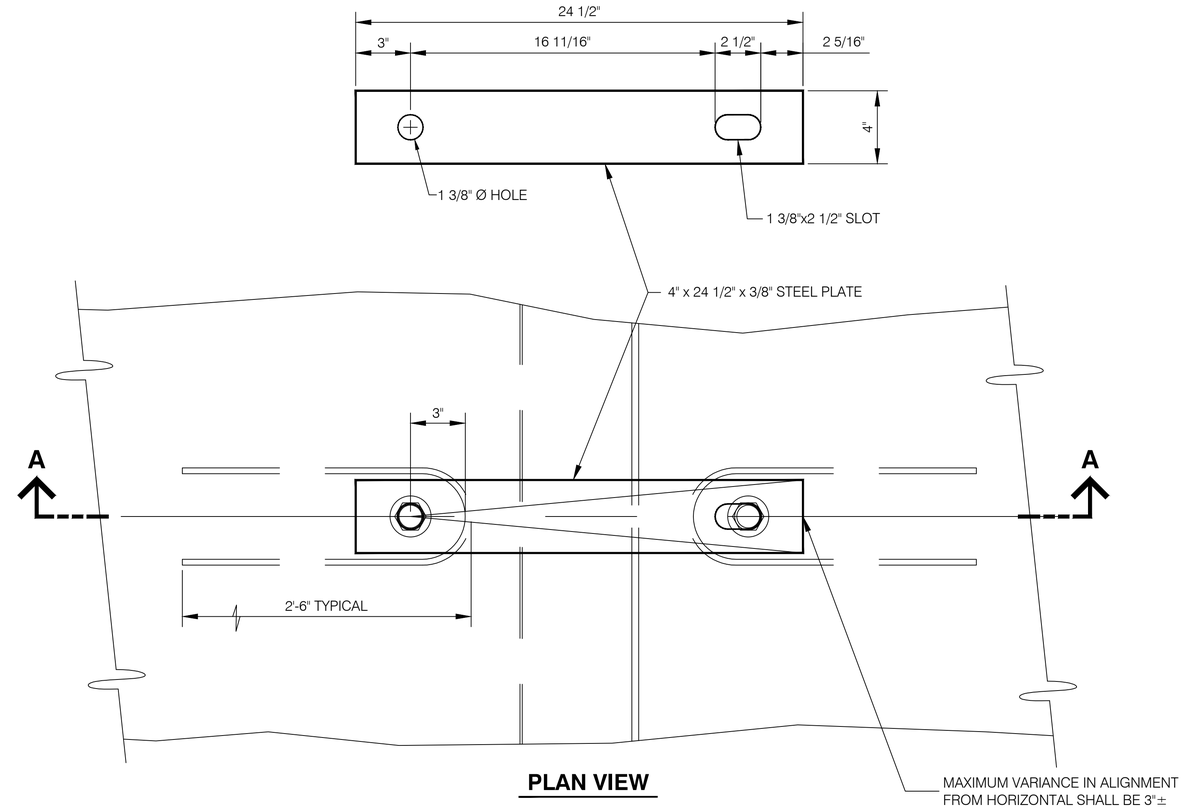

PLAN VIEW

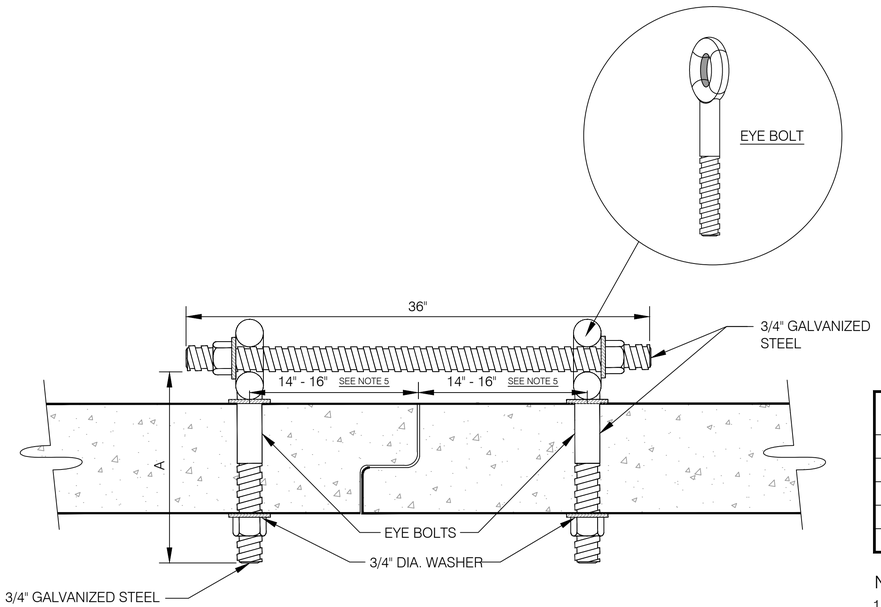

REINFORCED CONCRETE STORM SEWER PIPE

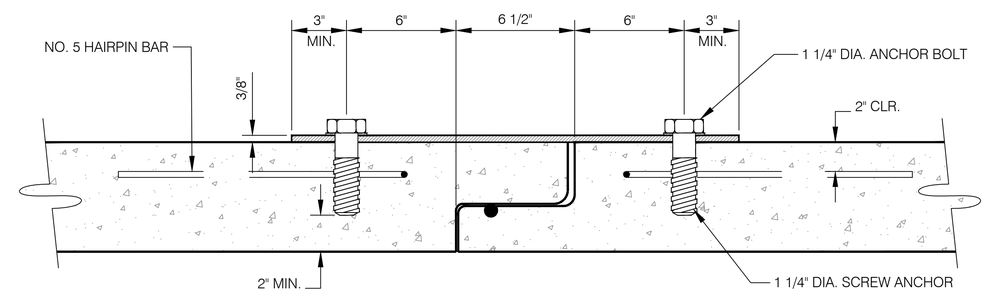

SECTION A-A
REINFORCED CONCRETE SANITARY SEWER PIPE
TONGUE & GROOVE JOINT

PIPE I.D.	WALL THICKNESS	ROD DIAMETER	"A"	NO. OF COUPLERS
12"-27"	2"-3 1/4"	5/8"	4 1/2"	2
30"-36"	3 1/2"-4"	5/8"	5"	2
42"-66"	5"-6 1/2"	3/4"	6" - 7 1/2"	2 or 3
72"-90"	7"-8 1/2"	3/4"	8" - 9 1/2"	3
96"-120"	9"-10"	1"	10" - 11"	3

NOTES:

1. ALL COUPLER ASSEMBLIES TO BE FURNISHED w/ 4 NUTS AND 4 WASHERS.
2. STANDARD THREADS SHALL BE USED ON ALL RODS AND NUTS.
3. ALL STEEL SHALL CONFORM TO ASTM A325.
4. ALL PARTS SHALL BE GALVANIZED TO ASTM A123.
5. VARIES DEPENDENT UPON IF OUTSIDE OF PIPE IS A BELL OR STRAIGHT SECTION AT THE JOINT.

NOTES

1. BOLT AND ANCHOR ASSEMBLIES SHALL BE 1 1/4" DIA. "RICHMOND TYPE" OR APPROVED EQUAL.
2. WASHERS SHALL BE USED AS NECESSARY TO OBTAIN A SNUG FIT.
3. BOLTS, WASHERS, AND STEEL PLATE SHALL BE GALVANIZED TO CONFORM TO ASTM A123.

DESIGN ENGINEER	CITY OF OMAHA PUBLIC WORKS DEPARTMENT	
	REINFORCED CONCRETE PIPE COUPLERS	STANDARD PLATE 700-83 — SHEET 1/1
CITY ENGINEER		ISSUE DATE: ... DECEMBER 10, 2013

L:\Engineering\01101\DOCUMENTS\Standard Plates\ACAD Files from City\REVISED PLATE NUMERS\PLT-700-83.dwg, 2/19/2014 9:07:26 AM, rick, 1:1.03774, Lamp, Rynearson & Associates

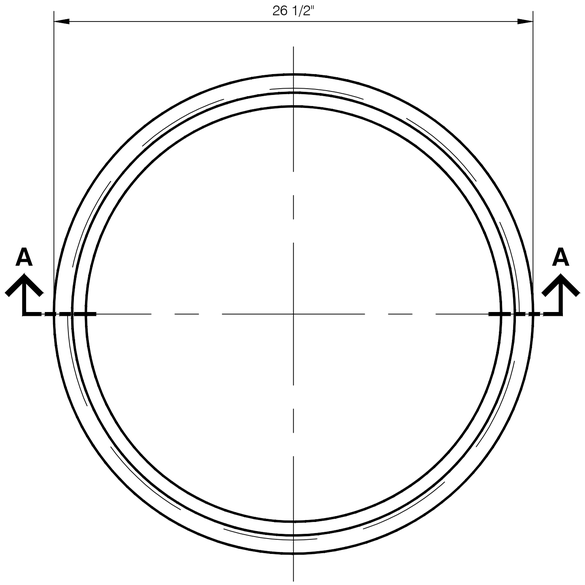

TOP VIEW

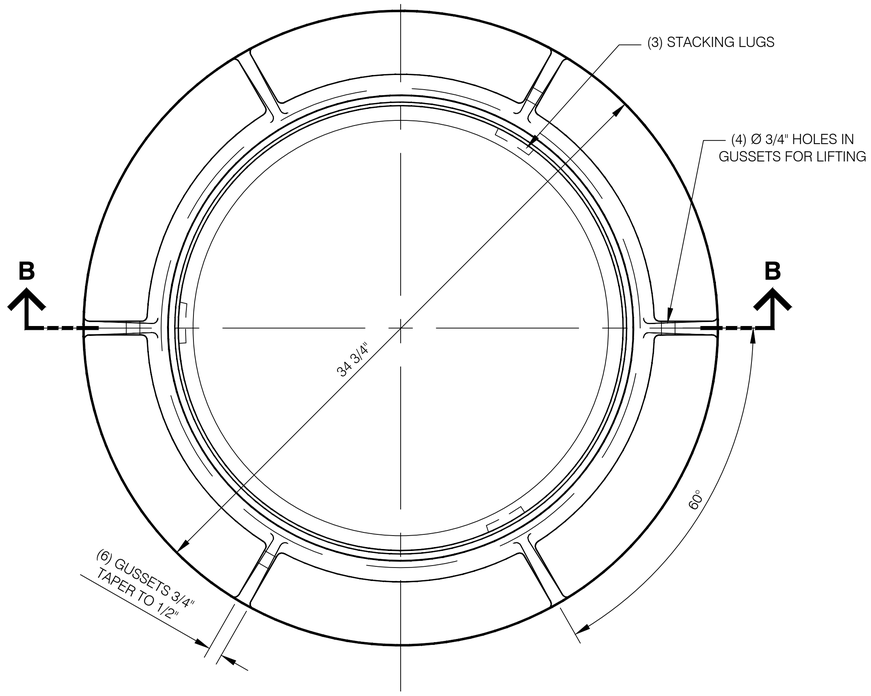

TOP VIEW

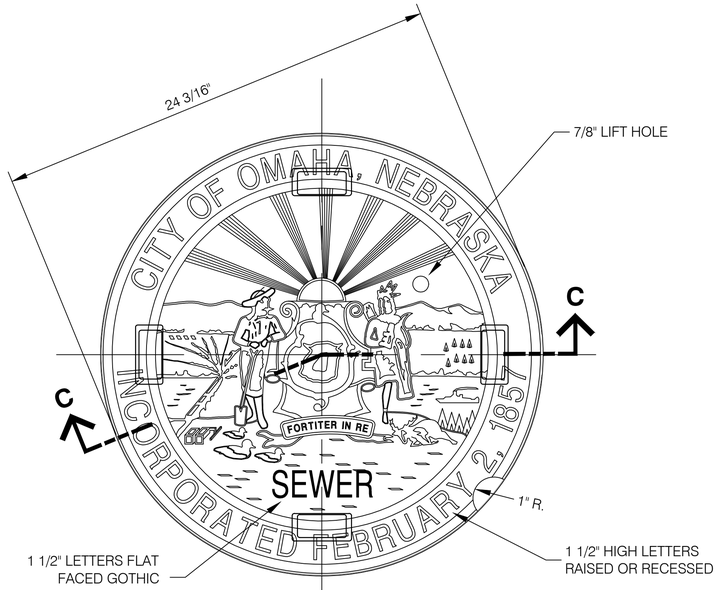

TOP VIEW

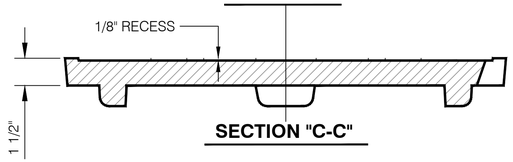

SECTION "C-C"

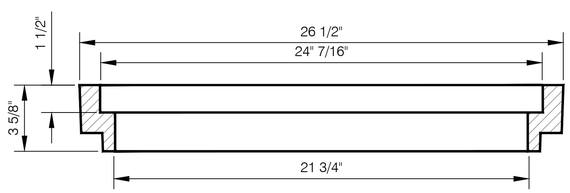

SECTION "A-A"

LIGHT WEIGHT RING

WT. 99 LBS.

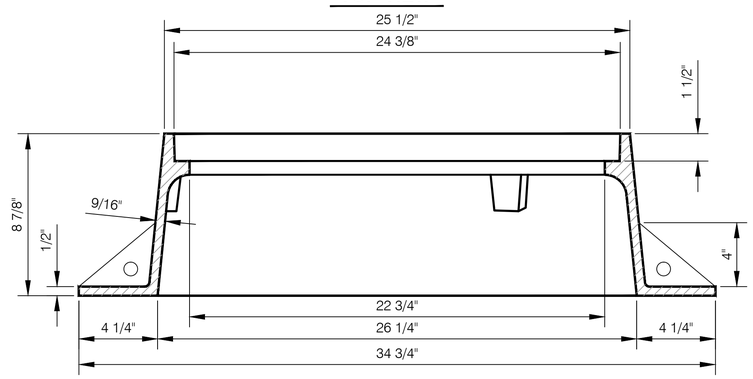

SECTION "B-B"

STANDARD CAST IRON MANHOLE RING

WT. 180 LBS.

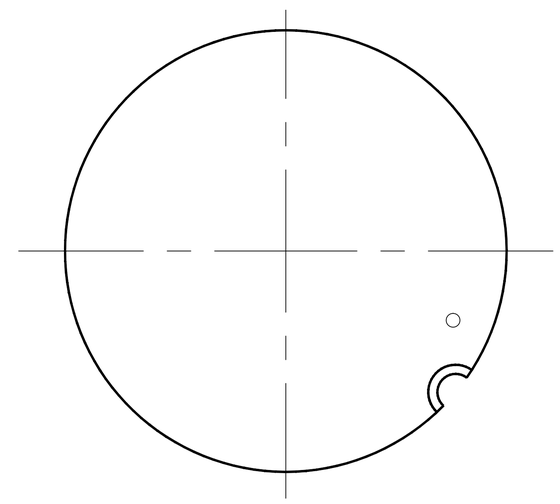

BOTTOM VIEW

STANDARD MANHOLE COVER

WT. 146 LBS.

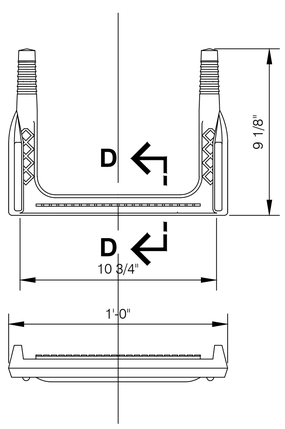

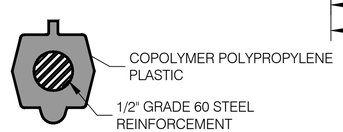

SECTION "D-D"

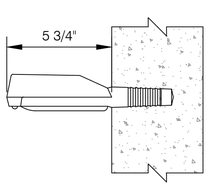

POLYPROPYLENE MANHOLE STEP

NOTES

1. MANHOLE RINGS, COVERS AND STEPS SHALL CONFORM TO THE REQUIREMENTS OF SECTION 700 OF THE STANDARD SPECIFICATIONS.
2. HORIZONTAL BEARING SURFACES SHALL BE MACHINED.
3. CASTINGS SHALL BE IN ACCORDANCE WITH ASTM A48 STANDARD SPECIFICATIONS FOR GRAY IRON CASTINGS.

DESIGN ENGINEER	CITY OF OMAHA PUBLIC WORKS DEPARTMENT	
	CAST IRON MANHOLE RINGS & COVERS, MANHOLE STEPS	STANDARD PLATE 700-90 — SHEET 1/2
CITY ENGINEER		ISSUE DATE: ..... DECEMBER 10, 2013

L:\Engineering\01101\DOCUMENTS\Standard Plates\ACAD Files from City\REVISED PLATE NUMERS\PLT-700-90 (1).dwg, 2/18/2014 9:10:31 AM, HoMc 11.03774, Lamp, Rynearson & Associates

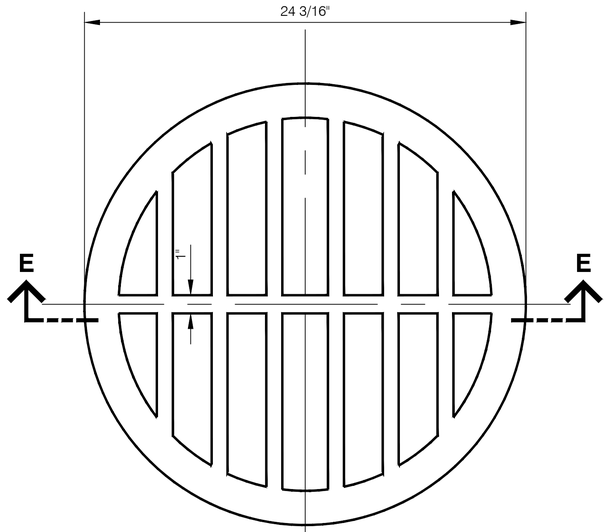

TOP VIEW

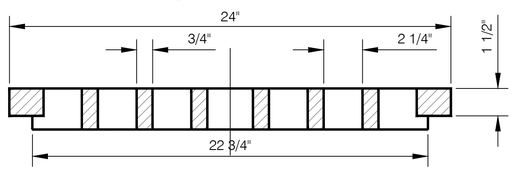

SECTION "E-E"

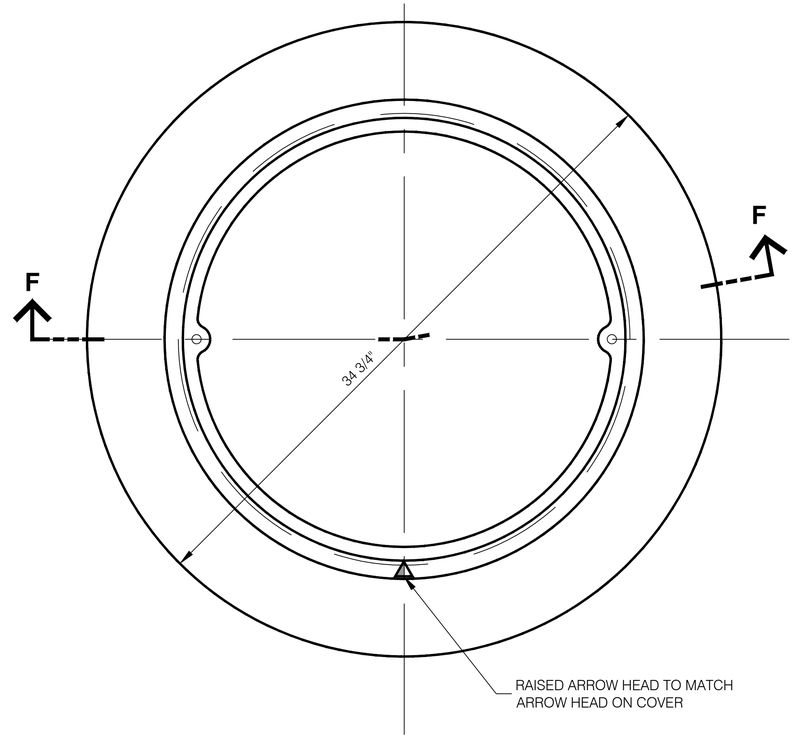

TOP VIEW

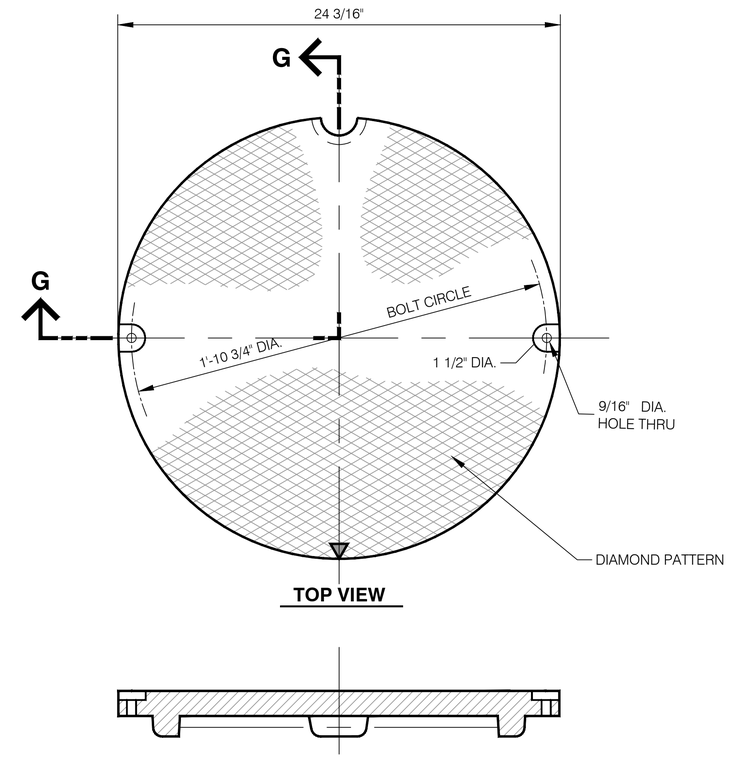

TOP VIEW

SECTION "G-G"

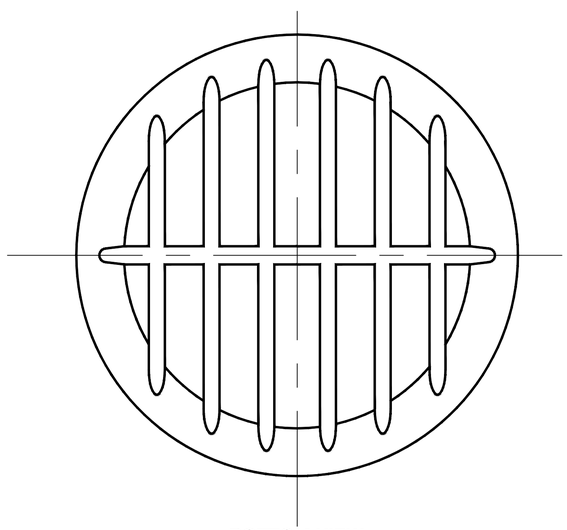

BOTTOM VIEW

GRATE COVER

WEIGHT = APPROX. 105 LBS.

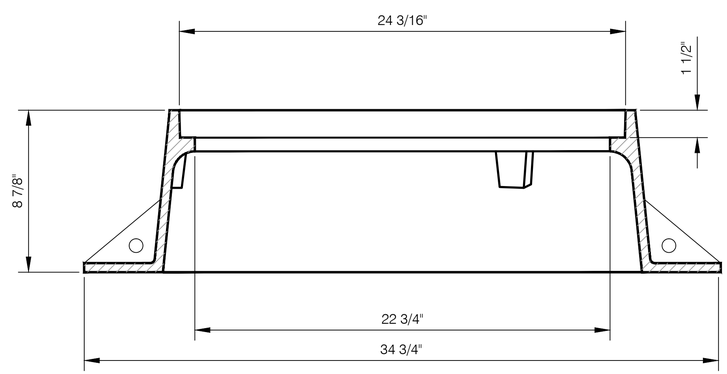

SECTION "F-F"

BOLT DOWN MANHOLE RING

TOTAL WEIGHT BOLT DOWN RING AND COVER = APPROX. 333 LBS.

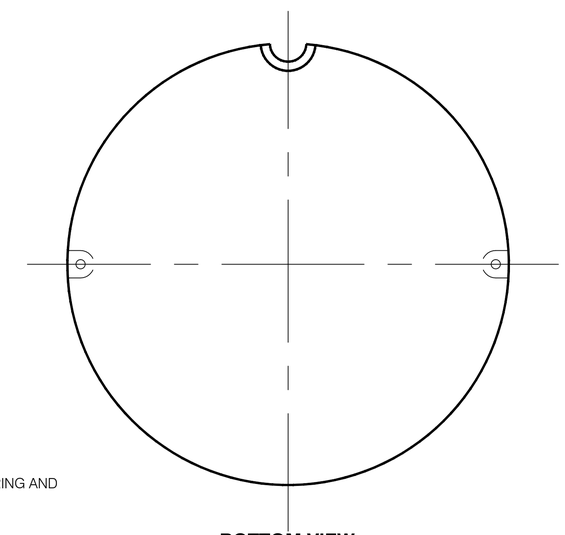

BOTTOM VIEW

BOLTED DOWN COVER

NOTES

1. CASTINGS SHALL CONFORM TO THE REQUIREMENTS OF SECTION 700 OF THE STANDARD SPECIFICATIONS.
2. BOLTS SHALL BE 1/2" - 13 UNC X 2 1/4" STAINLESS STEEL HEX HEAD CAP SCREWS.
3. HORIZONTAL BEARING SURFACES SHALL BE MACHINED.
4. CASTINGS SHALL BE IN ACCORDANCE WITH ASTM A 48 STANDARD SPECIFICATIONS FOR GRAY IRON CASTINGS.

DESIGN ENGINEER	CITY OF OMAHA PUBLIC WORKS DEPARTMENT	
	CAST IRON MANHOLE RINGS & COVERS, MANHOLE STEPS	**STANDARD PLATE 700-90** SHEET 2/2
CITY ENGINEER		ISSUE DATE: ..... DECEMBER 10, 2013

L:\Engineering\011010\DOCUMENTS\Standard Plates\ACAD Files from City\REVISED PLATE NUMBERS\PLT-700-90 (2).dwg, 2/19/2014 9:13:12 AM, rcbk, 1:1 0377A, Lamp, Rynearson & Associates

NOTES

1. GRATE, FRAME, AND CURB INLET SHALL CONFORM TO THE REQUIREMENTS OF SECTION 700 OF THE STANDARD SPECIFICATIONS.
2. WEIGHTS: GRATE APPROX. 365 LBS.
   FRAME APPROX. 292 LBS.
3. CASTINGS SHALL BE IN ACCORDANCE WITH ASTM A 48 STANDARD SPECIFICATIONS FOR GRAY IRON CASTINGS.

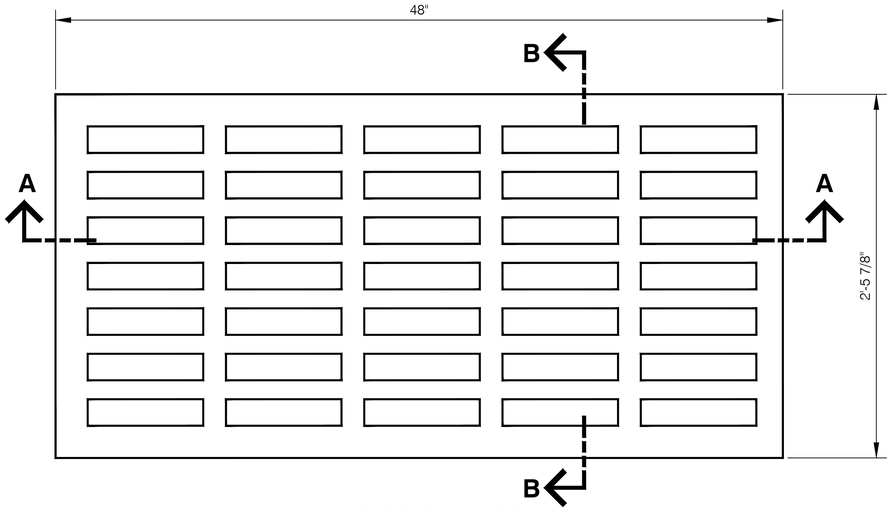

"A" GRATE PLAN VIEW

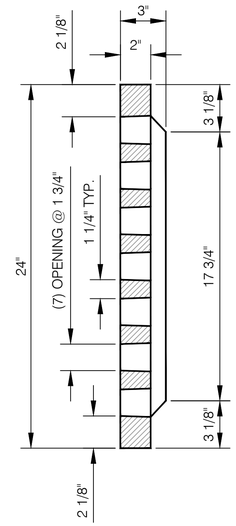

SECTION B-B

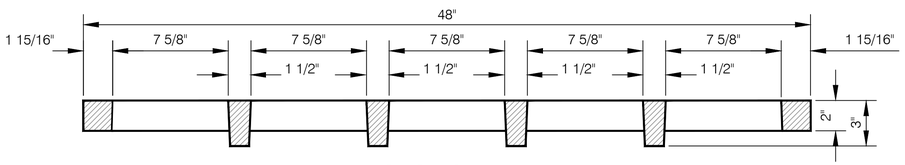

SECTION A-A

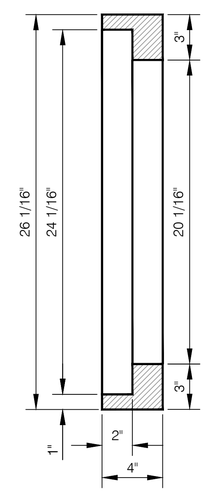

SECTION D-D

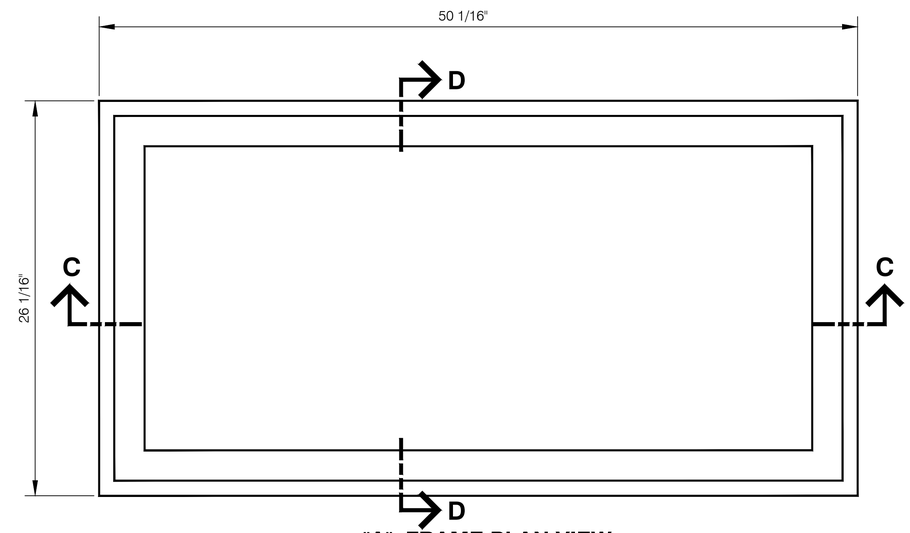

"A" FRAME PLAN VIEW

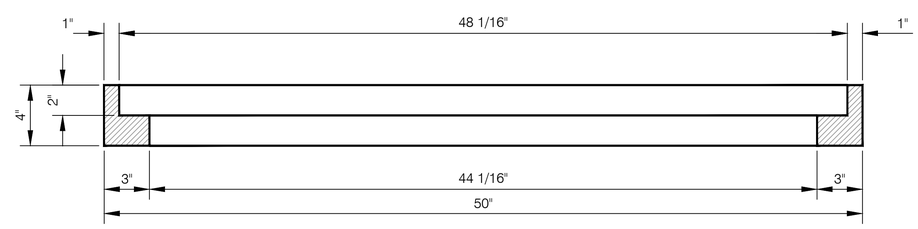

SECTION C-C

DESIGN ENGINEER	CITY OF OMAHA PUBLIC WORKS DEPARTMENT	
CITY ENGINEER	TYPE "A" FLAT CAST IRON GRATE AND FRAME	STANDARD PLATE **700-92** SHEET 1/1
		ISSUE DATE: ..... DECEMBER 10, 2013

L:\Engineering\01101\02\DOCUMENTS\Standard Plates\ACAD Files from City\REVISED PLATE NUMERS\PL T-700-92.dwg, 2/19/2014 9:15:31 AM, rcbk, 1:1 (3774, Lamp, Rynearson & Associates

NOTES

1. GRATE AND FRAME SHALL CONFORM TO SECTION 700 OF THE "STANDARD SPECIFICATIONS".
2. WEIGHT: FRAME APPROX. 190 LBS.
   GRATE APPROX. 348 LBS.
   CURB APPROX. 160 LBS.
3. GRATE AND FRAME SHALL CONFORM TO ASTM A48, CLASS 35B.
4. CASTINGS SHALL BE IN ACCORDANCE WITH ASTM A48 STANDARD SPECIFICATIONS FOR GRAY IRON CASTINGS.

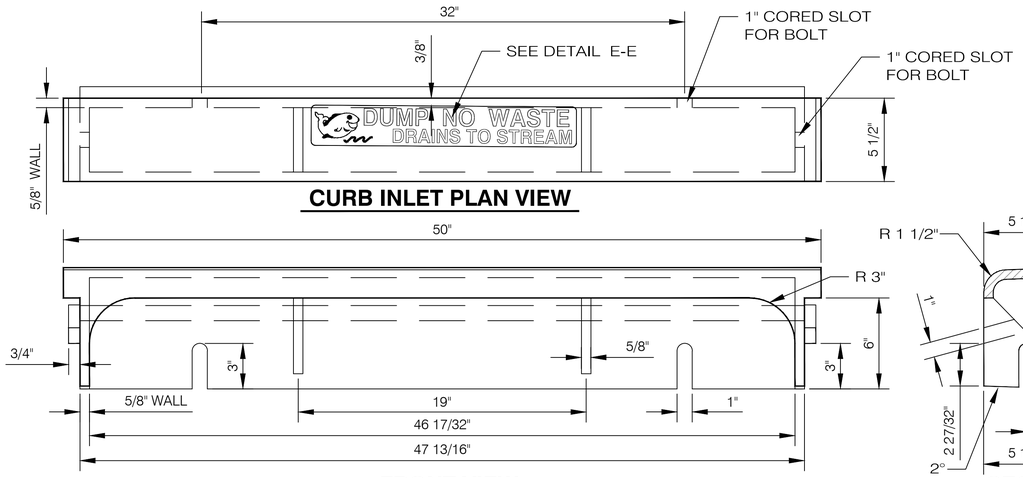

CURB INLET PLAN VIEW

FRONT VIEW

SECTION

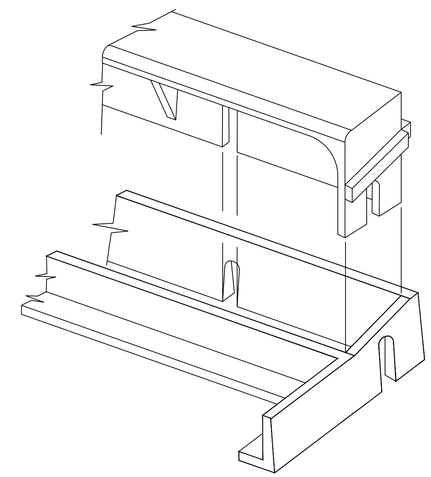

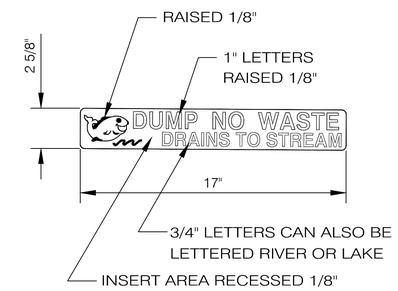

DETAIL E-E

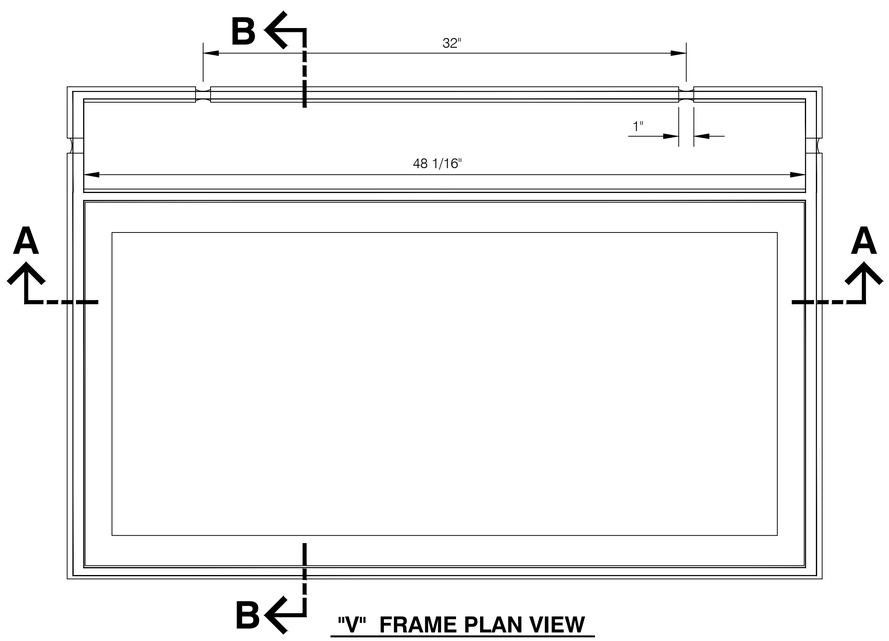

"V" FRAME PLAN VIEW

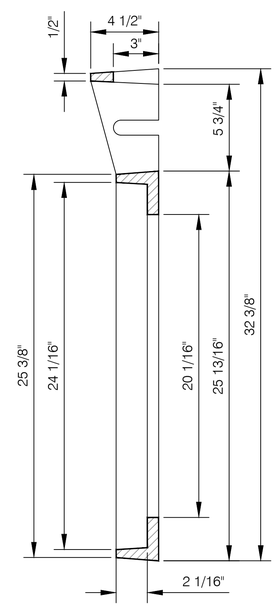

SECTION B-B

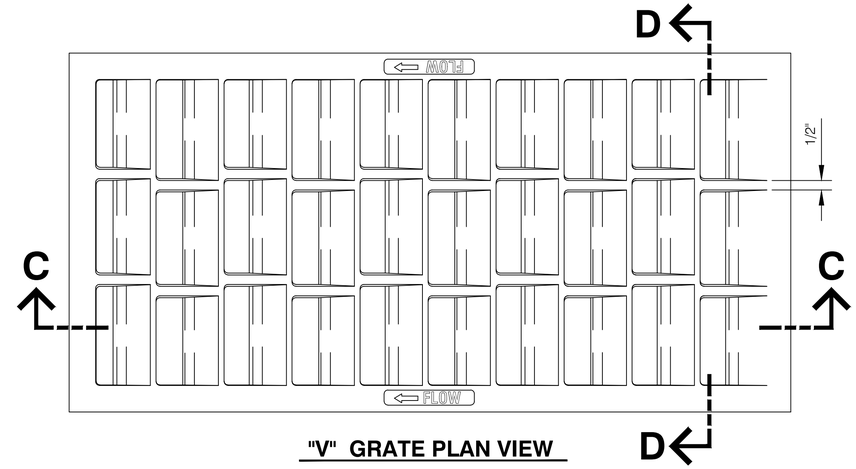

"V" GRATE PLAN VIEW

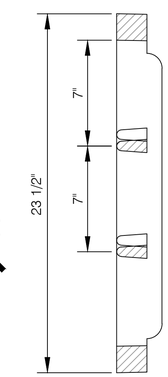

SECTION D-D

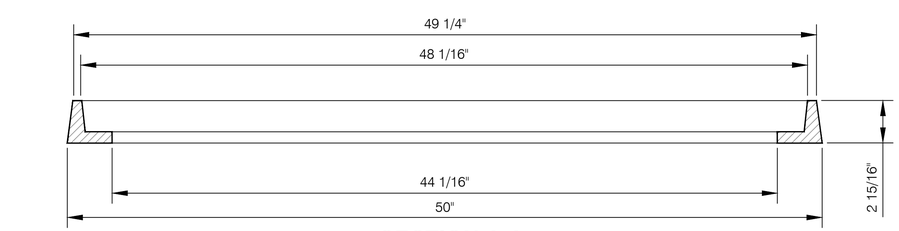

SECTION A-A

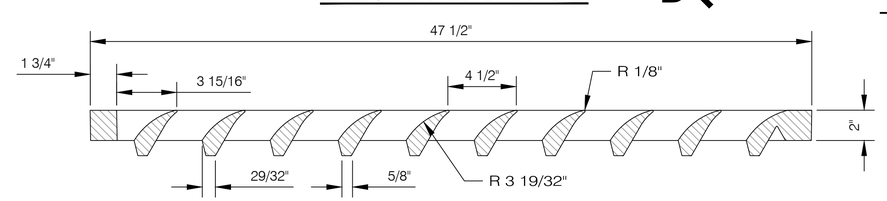

SECTION C-C

DESIGN ENGINEER	CITY OF OMAHA PUBLIC WORKS DEPARTMENT	
	TYPE "V" CAST IRON VANE GRATE, FRAME AND CURB INLET	STANDARD PLATE 700-93 — SHEET 1/1
CITY ENGINEER		ISSUE DATE: ..... DECEMBER 10, 2013

L:\Engineering\011010\DOCUMENTS\Standard Plates\ACAD Files from City\REVISED PLATE NUMERS\PLT-700-93.dwg, 2/19/2014 9:18:58 AM, rdsk, 1:1.03774, Lamp, Rynearson & Associates

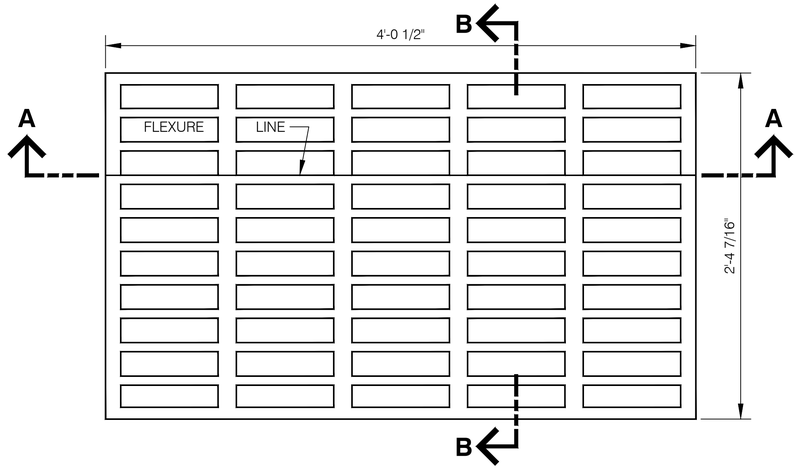

GRATE PLAN

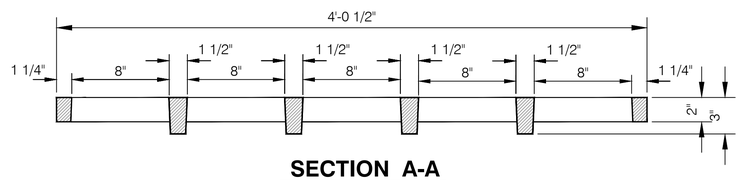

SECTION A-A

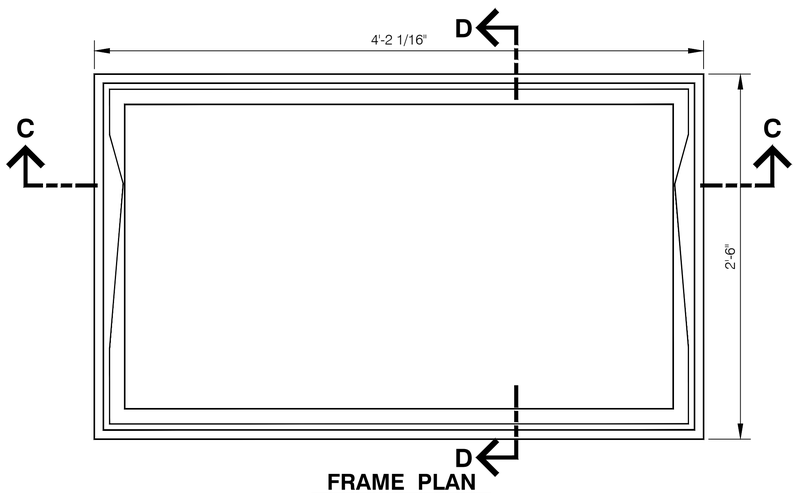

FRAME PLAN

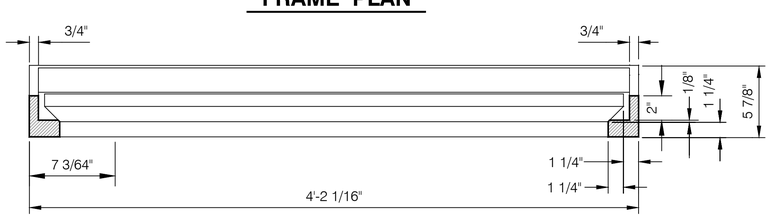

SECTION C-C

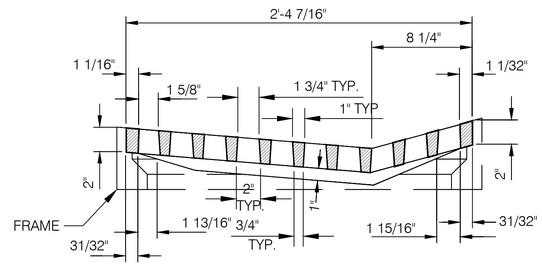

SECTION B-B

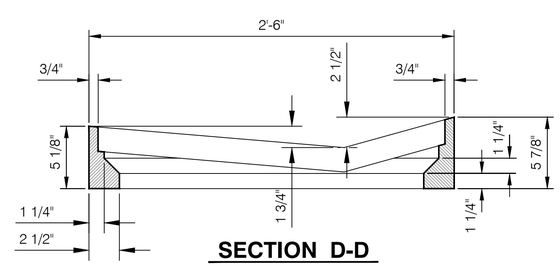

SECTION D-D

NOTES

1. GRATE, FRAME, AND CURB INLET SHALL CONFORM TO THE REQUIREMENTS FOR, "GRAY IRON CASTINGS", SECTION 700 OF THE STANDARD SPECIFICATIONS.

2. APPROXIMATE WEIGHTS OF CASTINGS:
   GRATE 343 LBS.
   FRAME 324 LBS.

3. CASTINGS SHALL BE IN ACCORDANCE WITH ASTM A48 STANDARD SPECIFICATIONS FOR GRAY IRON CASTINGS.

GRATE IN FRAME ISOMETRIC

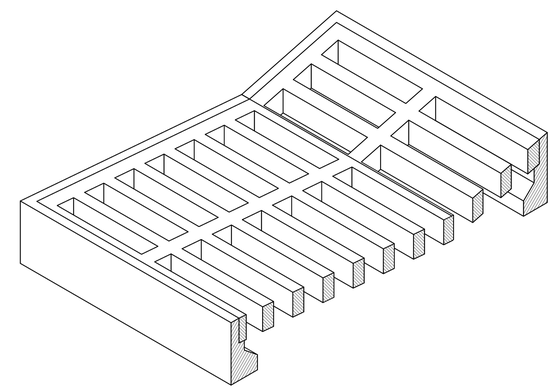

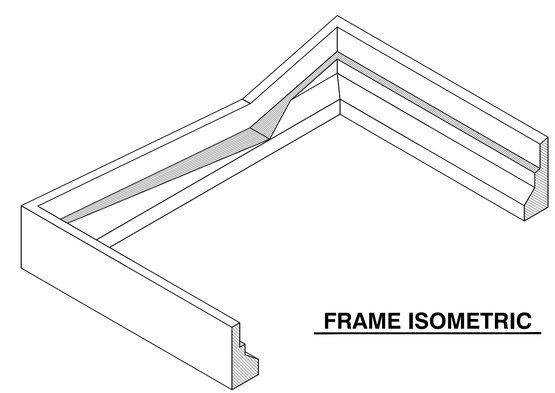

FRAME ISOMETRIC

DESIGN ENGINEER	CITY OF OMAHA PUBLIC WORKS DEPARTMENT		
	TYPE "SC" CAST IRON GRATE AND FRAME	STANDARD PLATE **700-94**	SHEET 1/1
CITY ENGINEER		ISSUE DATE: ..... DECEMBER 10, 2013	

L:\Engineering\011010\DOCUMENTS\Standard Plates\ACAD Files from City\REVISED PLATE NUMBERS\PLT-700-94.dwg, 2/19/2014 9:21:41 AM, rdsk, 1:1.03774, Lamp, Rynearson & Associates

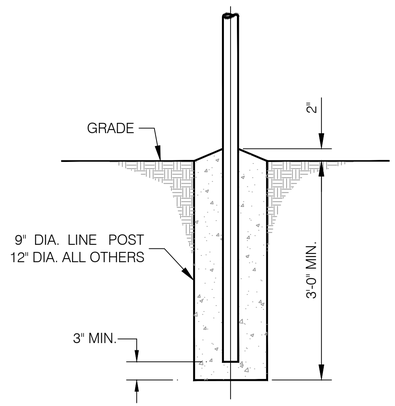

FOOTING DETAIL

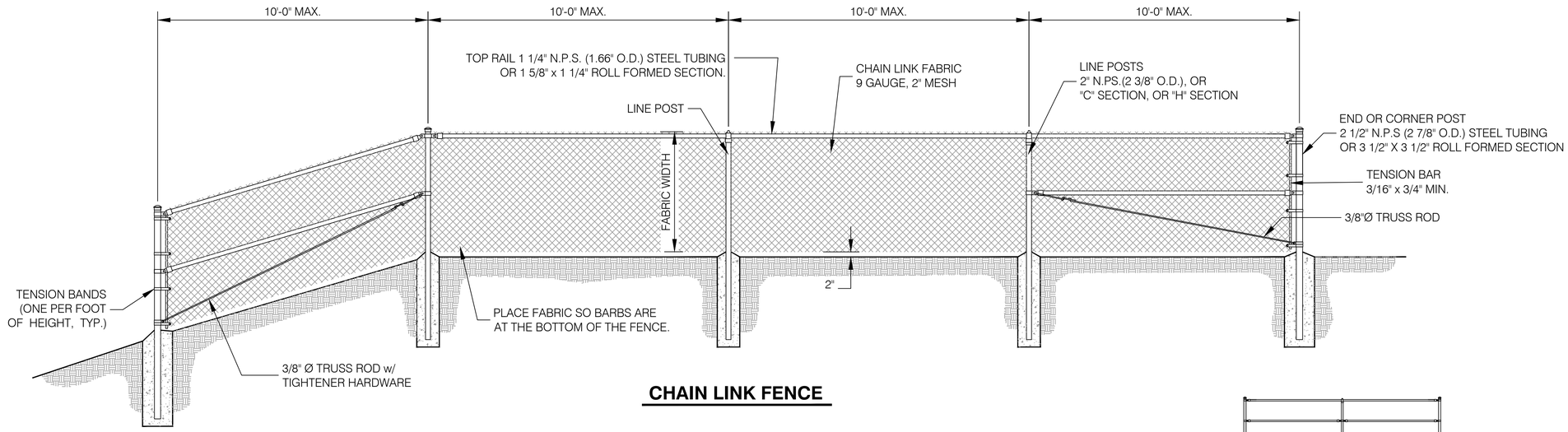

CHAIN LINK FENCE

LESS THAN 2 LINE POSTS
BRACE ONLY

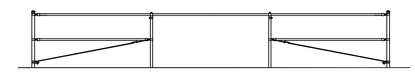

MORE THAN 2 LINE POSTS
BRACE AND TRUSS

BRACING CONFIGURATION

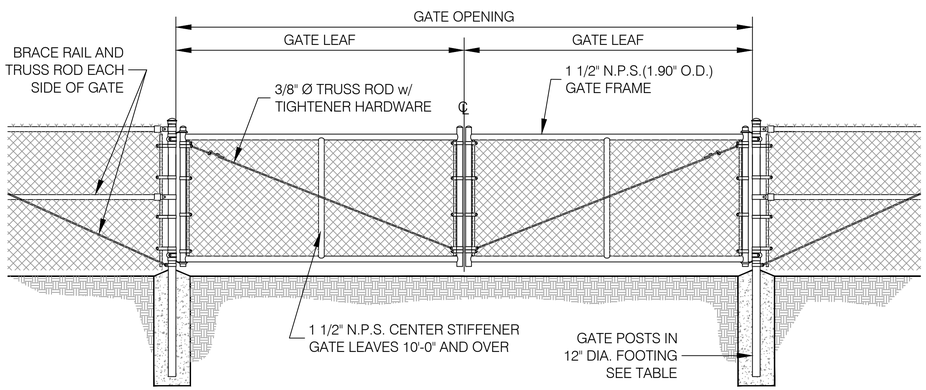

DOUBLE LEAF GATE

GATE FRAME AND POST SPECIFICATIONS		
	GATE FRAME	GATE POSTS
GATE LEAF UP TO 4'-0" FENCE HEIGHT UP TO 4'-0"	1 1/4" N.P.S. (1.66" O.D.)	3 1/2" ROLL FORMED OR 2 1/2" N.P.S (2.875" O.D.)
FENCE HEIGHTS 4'-0" OR GREATER GATE LEAF UP TO 6'-0"	1 1/2" N.P.S. (1.90" O.D.)	
GATE LEAF OVER 6'-0" TO 13'-0"		3 1/2" N.P.S. (4.00" O.D.)
GATE LEAF OVER 13'-0" TO 18'-0"		6" N.P.S. (6.625" O.D.)

NOMINAL PIPE SIZE (N.P.S.) TABLE OF DIMENSIONS AND WEIGHTS (PER ASTM A 53)			
NOMINAL PIPE SIZE (N.P.S.)	OUTSIDE DIAMETER	WALL THICKNESS	WEIGHT LBS./L.F.
	NOMINAL	NOMINAL	NOMINAL
1 1/4"	1.660"	0.140"	2.27
1 1/2"	1.900"	0.145"	2.72
2"	2.375"	0.154"	3.65
2 1/2"	2.875"	0.203"	5.79
3"	3.500"	0.216"	7.58
3 1/2"	4.000"	0.226"	9.11
6"	6.625"	0.280"	18.97

TABLE OF FENCE FRAMEWORK PHYSICAL PROPERTIES					
FRAMEWORK ITEM	OUTSIDE DIMENSIONS INCHES	MATERIAL THICKNESS INCHES	WEIGHT GALVANIZED LBS/FOOT	SECTION MODULUS INCHES	YIELD STRENGTH PSI
END, CORNER OR PULL POST	3.50" X 3.50"	0.128"	4.847	1.000	35,000
"H" SECTION LINE POST	2.25" X 1.70"	0.125"	3.26	0.661	45,000
"C" SECTION LINE POST	2.25" X 1.70"	0.121"	2.64	0.506	45,000
TOP OR BRACE RAIL	1.625" X 1.25"	0.0747"	1.35	0.165	35,000

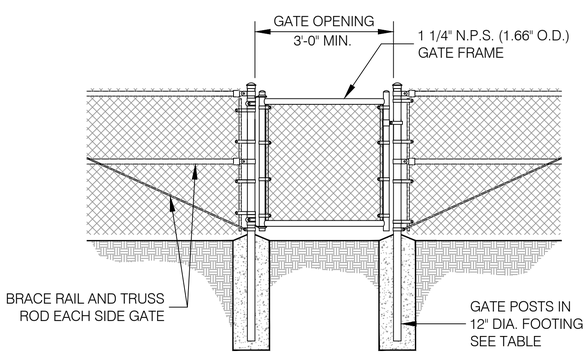

SINGLE LEAF WALKWAY GATE

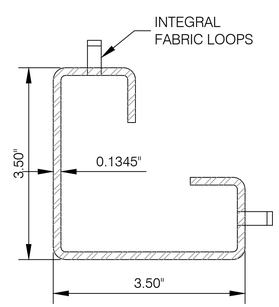

END, CORNER OR PULL POSTS ROLL FORMED SECTION

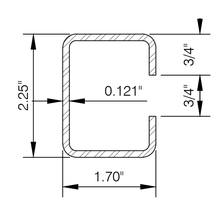

"C" SECTION LINE POST

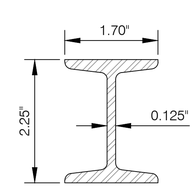

"H" SECTION LINE POST

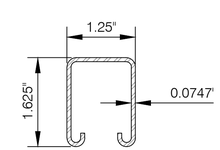

TOP AND BRACE RAIL ROLL FORMED SECTION

NOTES

1. CHAIN LINK FENCE MATERIALS AND CONSTRUCTION SHALL CONFORM TO SECTION 800 OF THE STANDARD SPECIFICATIONS.
2. CONCRETE USED FOR FOOTINGS SHALL BE L6 IN ACCORDANCE WITH SECTION 500
3. FENCE HEIGHT SPECIFIED ON THE PLANS SHALL EQUAL THE FABRIC WIDTH.
4. GATES 12'-0" OR MORE SHALL BE OF DOUBLE LEAF TYPE.
5. ALL GATES SHALL HAVE A BRACE RAIL AND TRUSS ROD ON EACH SIDE.
6. VARIATIONS OF THE FENCE DESIGN SHOWN SHALL BE SUBJECT TO APPROVAL OF SHOP DRAWINGS.
7. CORNER POSTS SHALL BE INSTALLED AT ALL FENCE INTERSECTIONS OR WHEN JOINING AN EXISTING FENCE.

DESIGN ENGINEER

CITY ENGINEER

CITY OF OMAHA PUBLIC WORKS DEPARTMENT

CHAIN LINK FENCE AND CHAIN LINK FENCE GATE

STANDARD PLATE **800-01** SHEET 1/1

ISSUE DATE: ..... DECEMBER 10, 2013

L:\Engineering\011010\DOCUMENTS\Standard Plates\ACAD Files from City\REVISED PLATE NUMERS\PLT-800-01.dwg, 2/19/2014 9:24:23 AM, rdsk, 1:1.03774, Lamp, Rynearson & Associates

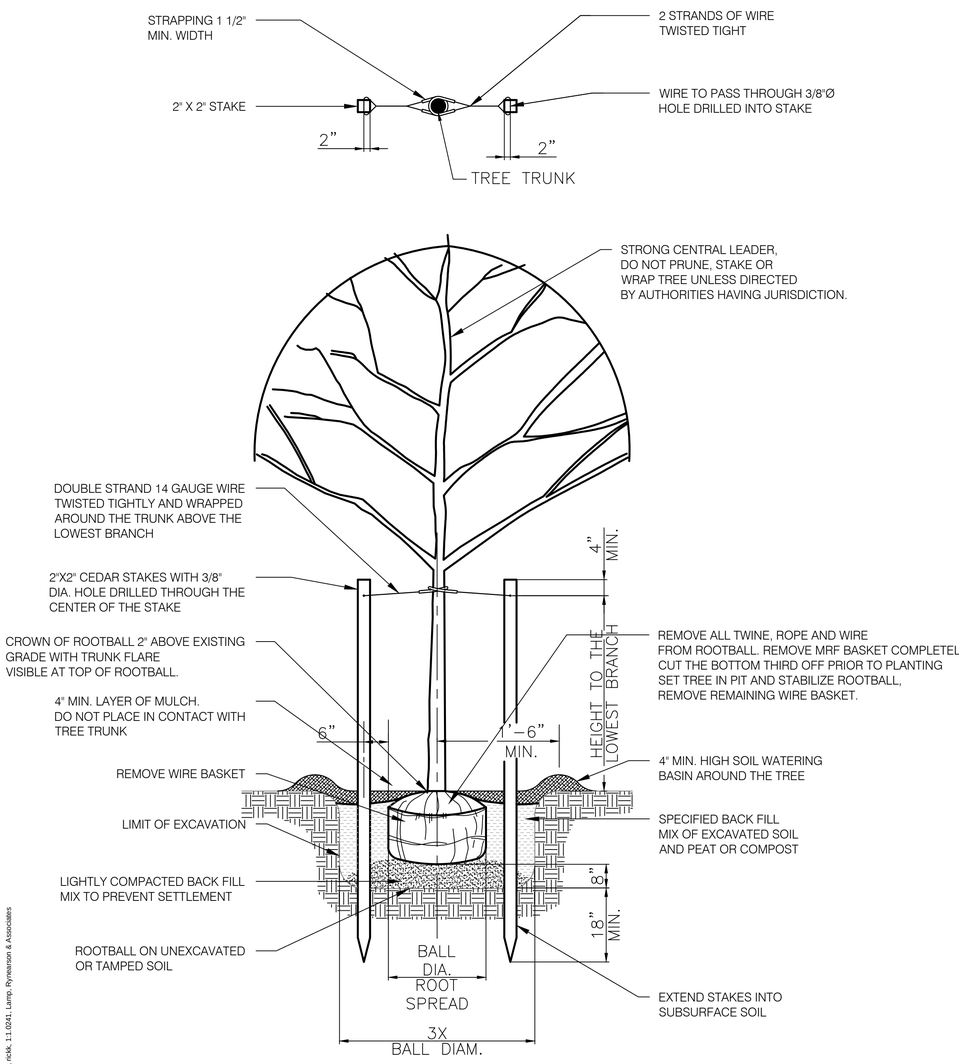

TREE PLANTING DETAIL, (TYP.)
NO SCALE

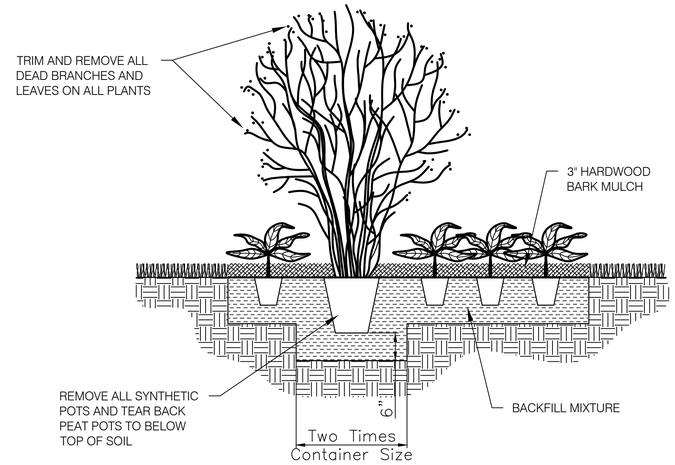

SHRUB AND GROUNDCOVER PLANTING DETAIL
NO SCALE

TREE PLANTING NOTES

1. PLANTING OF NEW VEGETATION: THE CONTRACT UNIT PRICES FOR ALL NEW VEGETATION SHALL BE FULL COMPENSATION FOR ALL LABOR, EQUIPMENT AND MATERIAL REQUIRED TO INSTALL THE NEW PLANTINGS AS SHOWN ON THE PLANS, SPECIFICATIONS AND AS DIRECTED BY THE ENGINEER.

2. REPLACEMENT OF UNACCEPTABLE PLANT MATERIAL: THE CONTRACTOR'S RESPONSIBILITY FOR REPLACEMENT OF UNACCEPTABLE PLANT MATERIAL SHALL EXTEND FOR TWO (2) YEARS AFTER ALL PLANT MATERIAL IS ACCEPTED BY THE ENGINEER.

3. MAINTENANCE DURING GUARANTEE PERIOD: THE CONTRACTOR IS RESPONSIBLE FOR GENERAL MAINTENANCE OF ALL TREES AND SHRUBS FOR A PERIOD OF TWO (2) YEARS FROM THE TIME THEY ARE ACCEPTED BY THE ENGINEER. MAINTENANCE SHALL INCLUDE WATERING, FERTILIZING, PRUNING, MULCHING, WEEDING, INSECT AND DISEASE CONTROL, AND ANY OTHER CARE NEEDED TO MAINTAIN THE LIFE OF THE TREES OR SHRUBS. THE FREQUENCY OF THE MAINTENANCE SHALL BE AS REQUIRED TO MAINTAIN HEALTHY GROWTH AND A NEAT APPEARANCE OF THE PLANTING AS DETERMINED BY THE ENGINEER.

4. SUBMITTALS: THE CONTRACTOR SHALL PLANT TREES THAT HAVE BEEN PURCHASED FROM REGION 5 OR NORTHERLY. A CERTIFICATE OF ORIGIN MUST BE SUBMITTED FOR EACH SPECIES OF TREE THAT IS TO BE PLANTED. THE CONTRACTOR SHALL ALSO SUBMIT HIS LANDSCAPING PLAN PRIOR TO STARTING WORK IF IT VARIES FROM THE BID PLAN.

5. BARK MULCH: THE CONTRACTOR SHALL PLACE 3 CUBIC FEET OF BARK MULCH IN A 4-FOOT DIAMETER RING AT THE BASE OF EACH TREE THAT IS PLANTED. THIS SHALL BE CONSIDERED AN ESTABLISHED QUANTITY. ANY BARK MULCH PLACED IN EXCESS OF THE REQUIREMENTS SHALL BE AT THE CONTRACTOR'S EXPENSE. BARK MULCH SHALL BE MEASURED BY TAKING THE ESTABLISHED QUANTITY OF BARK MULCH PER PLANTING AND THEN MULTIPLYING BY THE ACTUAL NUMBER OF PLANTINGS MADE. BARK MULCH SHALL BE PAID FOR AT THE CONTRACT UNIT PRICE PER CUBIC YARD. THE CONTRACT UNIT PRICE FOR BARK MULCH SHALL BE CONSIDERED FULL COMPENSATION FOR ALL LABOR, EQUIPMENT, MATERIALS AND INCIDENTALS NECESSARY TO COMPLETE THE MULCHING.

6. RESEEDING: ALL AREAS DISTURBED DURING PLANTING WILL BE RESEEDED BY THE CONTRACTOR. THIS ITEM WILL NOT BE PAID FOR SEPARATELY, BUT WILL BE CONSIDERED INCIDENTAL TO THE PLANTING OF NEW VEGETATION.

7. HARDWOOD BARK MULCH SHALL BE PLACED A MINIMUM OF FOUR (4) INCHES THICK.

8. THE CONTRACTOR SHALL PLACE HARDWOOD BARK MULCH AT ALL LANDSCAPED ISLANDS NOT RECEIVING SOD.

STAKING NOTES

1. STAKING SHALL NOT CREATE PEDESTRIAN AND VEHICULAR HAZARDS.

2. DO NOT USE WIRE AND HOSING.

3. DECIDUOUS TREE STAKING: 2" X 2" X 10' POSTS STRIPPED OF BARK. NO.1 DOUGLAS FIR OR CEDAR, 3 POSTS 120° APART. DO NOT PIERCE ROOT BALL.

4. EVERGREEN TREE STAKING: 2" X 2" X 2' POSTS STRIPPED OF BARK. NO.1 DOUGLAS FIR OR CEDAR, 3 POSTS 120° APART. DO NOT PIERCE ROOT BALL.

5. STRAPPING: MIN. 1 1/2" WIDE.

			CITY OF OMAHA PUBLIC WORKS DEPARTMENT
		DESIGN ENGINEER	TREE PLANTING — STANDARD PLATE 800-02 — SHEET 1/1
		CITY ENGINEER	ISSUE DATE: ... DECEMBER 10, 2013

L:\Engineering\01101\02\DOCUMENTS\Standard Plates\ACAD Files from City\REVISED PLATE NUMERS\PL-T-800-02.dwg, 3/6/2014 1:55:04 PM, rickk, 1:1.0241, Lamp, Rynearson & Associates

PULL BOX, TYPE PB-1 AND TYPE PB-1A

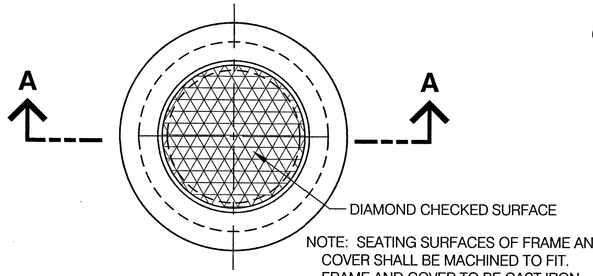

NOTE: SEATING SURFACES OF FRAME AND COVER SHALL BE MACHINED TO FIT. FRAME AND COVER TO BE CAST IRON.

PLAN VIEW

PULL BOX, TYPE PB-2

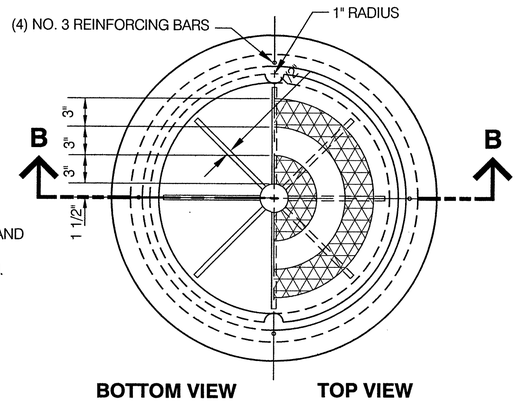

BOTTOM VIEW **TOP VIEW**

FIBER BOX DIMENSIONS				
PULLBOX TYPE	A	B	C	D
PB-6	18*	27*	18*	30*
PB-8	24*	36*	18*	30*
PB-10	36*	48*	36*	48*

1

ALL DIMENSIONS IN INCHES
(* - DENOTES A MINIMUM DIMENSION REQUIREMENT)

FIBER BOXES

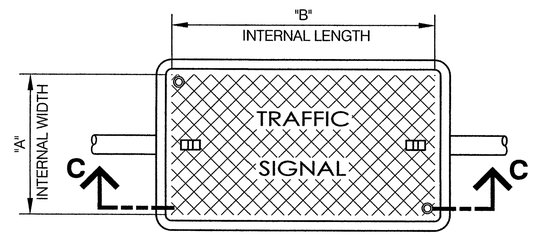

TYPE PB-1A

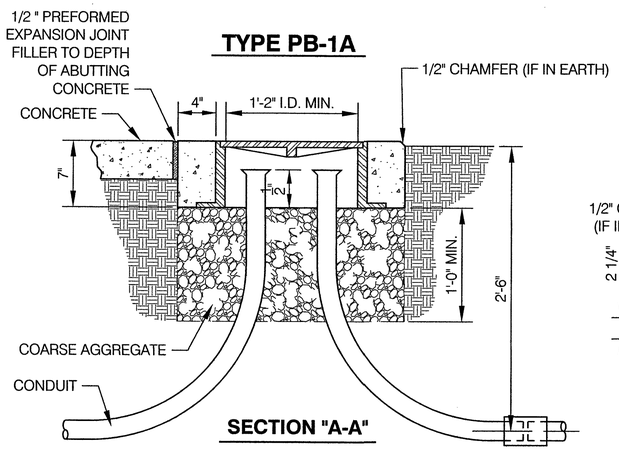

SECTION "A-A"

TYPE PB-1

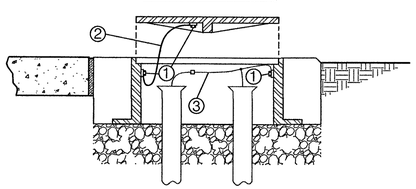

SECTION "A-A"

GROUNDING CONNECTIONS IN PULL BOX
(TYPICAL ALL METAL PULL BOXES)

1. BRONZE GROUNDING LUG, (MAY BE BOLTED OR BRAZED TO RING AND COVER).
2. FLEXIBLE GROUNDING CONDUCTOR: 24", NO. 6 THIN STRANDED COPPER, GREEN.
3. NO. 6 GROUNDING CONDUCTOR.

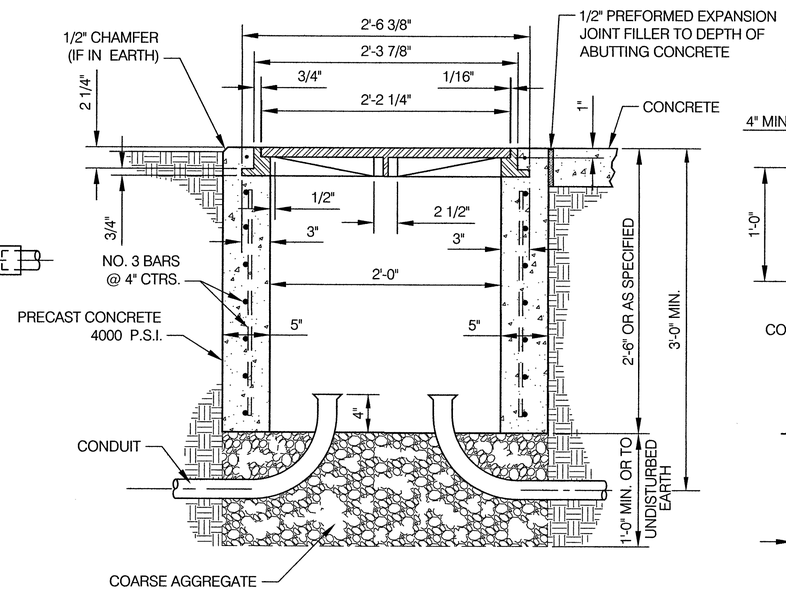

SECTION "B-B"

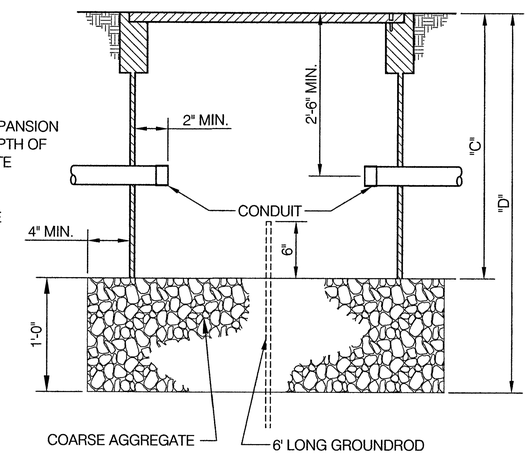

SECTION "C-C" ..... TYPE PB-8 & PB-10

NOTES

1. ACCESS DUCTS, BENDS AND/OR STEPS ARE SUBSIDIARY TO THE ITEM "PULL BOX, TYPE PB-1", "PULL BOX, TYPE PB-1A", OR "FIBER BOXES".
2. COARSE AGGREGATE FOR FILL MATERIAL SHALL BE COMPOSED OF CLEAN, HARD, DURABLE AND UNCOATED PARTICLES, MINIMUM OF 1" IN DIAMETER.
3. CONDUIT TERMINATION IN PULL BOX SHALL BE FITTED WITH BELL OR FLARED END.
4. PULL BOXES WHICH ARE INTENDED FOR INSTALLATION IN SURFACED AREA, SUCH AS SIDEWALKS OR SURFACED MEDIANS, SHALL HAVE A LIP OR FLANGED EDGE FRAMING THE COVER OPENING TO PROVIDE A FLUSH, FRAMED SEPARATION BETWEEN THE SURFACING MATERIAL AND THE EDGES OF THE COVER.
5. FIBER PULL BOXES ARE INTENDED TO BE INSTALLED BEHIND CURBS OR SIDEWALKS AT DISTANCES OFF THE ROADWAY WHERE NO DELIBERATE VEHICULAR TRAFFIC IS ANTICIPATED AND ONLY AN OCCASIONAL HEAVY VEHICLE WILL BE ENCOUNTERED.
6. FIBER PULL BOXES SHALL BE MANUFACTURED ENTIRELY OF POLYMER CONCRETE (PC) CONSISTING OF AGGREGATE BOUND TOGETHER WITH POLYESTER RESINS AND REINFORCED WITH WOVEN GLASS STRANDS OF FIBER POLYESTER REINFORCEMENT OR A COMBINATION OF POLYMER CONCRETE AND STRUCTURAL FIBERGLASS REINFORCED POLYMERS (FRP) OR A COMBINATION OF POLYMER CONCRETE AND HIGH DENSITY POLYETHYLENE (HDPE).
7. FIBER PULL BOX COVERS SHALL BE MADE OF HEAVY DUTY POLYMER CONCRETE CONSTRUCTION, EITHER SOLID OR SUFFICIENTLY RIBBED TO WITHSTAND THE STATIC LOADS AS REQUIRED BELOW. THE MANUFACTURER'S NAME AND THE LOGO, "TRAFFIC SIGNAL", SHALL BE ON THE COVER. THE COVER SHALL BE HELD SECURELY IN PLACE BY TWO OR MORE 3/8" (MIN. DIA.) STAINLESS STEEL HEX HEAD BOLTS WITH FLAT WASHERS. BOLTS SHALL BE CAPTIVE TO COVER.
8. FIBER PULL BOX ASSEMBLIES (BOX WITH COVER SECURELY ATTACHED) SHALL BE DESIGNED FOR A VERTICAL STATIC LOAD OF 16,000 POUNDS WITH A 1.3 SAFETY FACTOR. A VERTICAL TEST LOAD OF 20,800 POUNDS APPLIED TO A 10" x 10" STEEL PLATE CENTERED ON THE COVER'S SURFACE SHALL NOT CAUSE FAILURE ON ANY PART OF THE ASSEMBLY.
9. FIBER PULL BOX ASSEMBLIES (BOX WITH COVER SECURELY ATTACHED) SHALL BE DESIGNED FOR A 200 PSF LATERAL STATIC PRESSURE WITH A 3.0 SAFETY FACTOR. A 1,800 POUND TEST LOAD APPLIED TO A 24" x 18" STEEL PLATE CENTERED ON THE WALL OF THE BOX HAVING THE LONGEST DIMENSION, SHALL CAUSE NO PERMANENT DAMAGE TO ANY PART OF THE ASSEMBLY.
10. MANUFACTURER'S CERTIFIED TEST RESULTS, SHOWING COMPLIANCE WITH SPECIFIED DESIGN LOADS AND SAFETY FACTORS ALONG WITH A PHYSICAL DESCRIPTION OF THE TESTING METHODS USED TO ACHIEVE THOSE RESULTS, WILL BE REQUIRED FOR EACH TYPE OF PULL BOX BEING FURNISHED. TEST RESULTS SHALL SHOW THE PROJECT NUMBER, CONTROL NUMBER, AND PROJECT LOCATION AND SHALL BE SIGNED BY AN AUTHORIZED REPRESENTATIVE OF THE FIRM MANUFACTURING THE PULL BOX.
11. ALL CABLES AND CONUITS IN PULL BOXES SHALL BE PROPERLY LABELED WITH CABLE AND CONDUIT ORIGIN AND DESTINATION LOCATIONS. 1

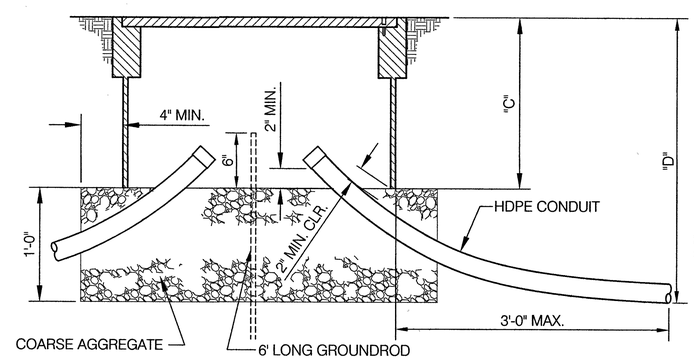

SECTION "C-C" ..... TYPE PB-6
HDPE CONDUIT

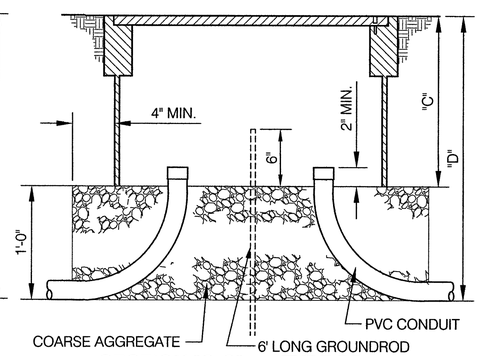

SECTION "C-C" ..... TYPE PB-6
PVC CONDUIT

1	6/02/2015	TRAFFIC ENGINEER	CITY OF OMAHA — PUBLIC WORKS DEPARTMENT
	6/11/15	CITY ENGINEER	**PULL BOXES** — TYPES PB-1, PB-1A, PB-2, PB-6, PB-8, PB-10

STANDARD PLATE **900-01** SHEET 1/1

ISSUE DATE: ..... DECEMBER 10, 2013

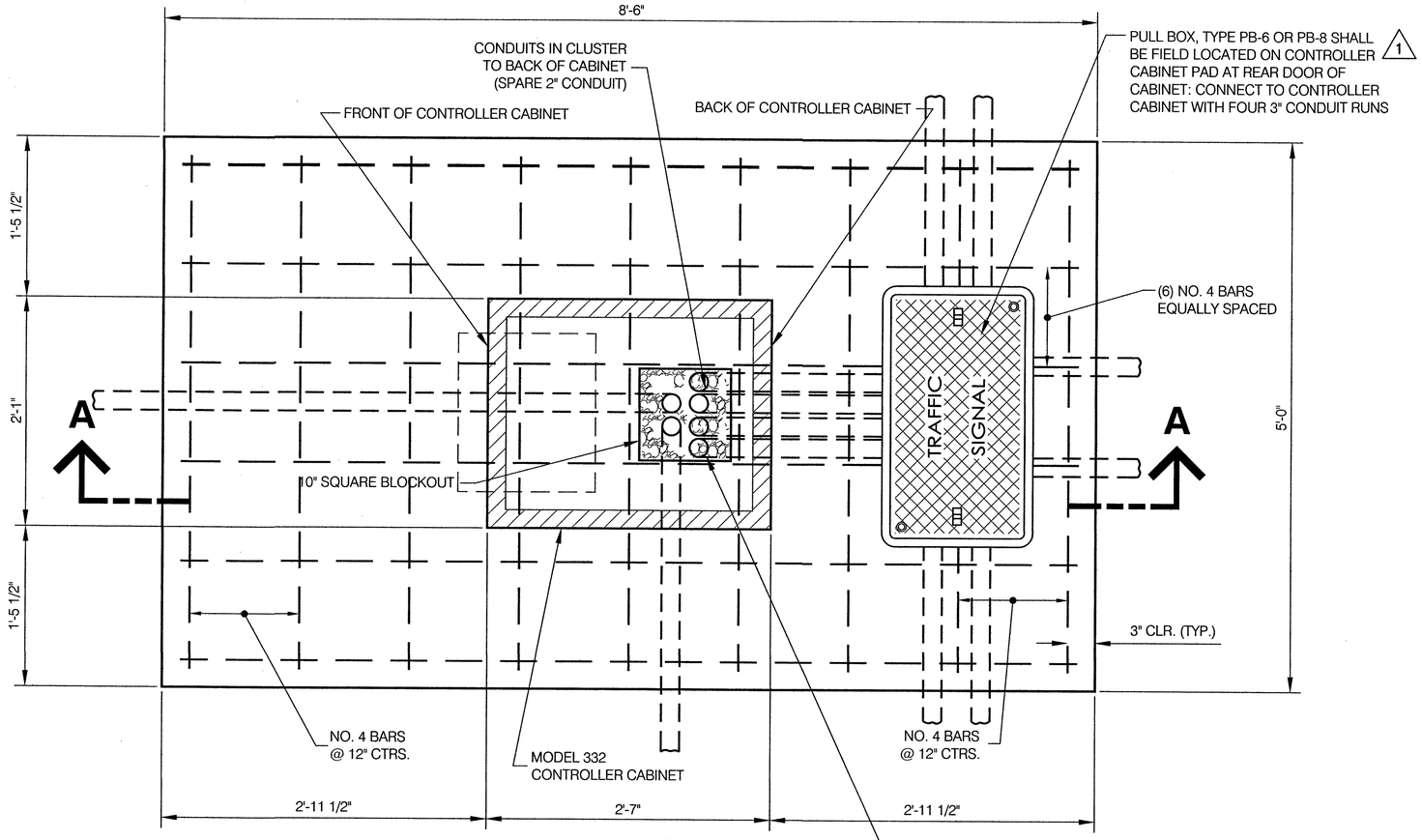

PLAN VIEW

NOTES

1. ALL WORK SHALL CONFORM TO THE NATIONAL ELECTRIC CODE AND ANY LOCAL REGULATIONS.
2. THE ENDS OF THE SPARE CONDUCTORS SHALL NOT BE CUT BACK AND SHALL BE NEATLY COILED AND TAPED BACK FOR POSSIBLE FUTURE USE. ALL CABLES ENTERING CONTROLLER CABINET SHALL BE IDENTIFIED BY MEANS OF METAL TAGS.
3. ALL REINFORCING STEEL SHALL BE DEFORMED BARS CONFORMING TO THE REQUIREMENTS OF SECTION 900 OF THE STANDARD SPECIFICATIONS.
4. REINFORCING SHALL BE PLACED WITH A TOLERANCE OF -1/4" AND +1/2" ON CLEARANCE.
5. ALL CONCRETE SHALL CONFORM TO SECTION 900 OF THE STANDARD SPECIFICATIONS.
6. THERE SHALL BE AT LEAST ONE SPARE 3" CONDUIT BEND INSTALLED IN EACH CONTROLLER FOUNDATION WITH BOTH ENDS PLUGGED AND FREE OF DEBRIS AND MOISTURE.
7. CONTROLLER PADS LOCATED WITHIN SIDEWALK AREAS SHALL BE PLACED AT THE SAME GRADE AS SIDEWALK AND A 3" CONCRETE RISER SHALL BE CONSTRUCTED AS SHOWN.
8. CONTROLLER PAD SHALL BE PLACED AT SAME SLOPE AS SURROUNDING GROUND.
9. 3" CONCRETE RISER (MINIMUM HEIGHT) SHALL BE CONSTRUCTED TO INSURE CABINET IS LEVEL. RISER SHALL BE CONSTRUCTED TO THE SAME DIMENSIONS AS THE CONTROLLER BASE, IF DIFFERENT THAN THE ABOVE.
10. GROUND ROD SHALL BE PLACED PRIOR TO CONCRETE PLACEMENT. THE ROD SHALL PROJECT 8 INCHES MINIMUM ABOVE THE TOP OF THE FINISHED FOUNDATION AND EXTEND NINE FEET MINIMUM BELOW THE BOTTOM OF THE FOUNDATION.
11. (1) CONTROLLER PAD AND CONCRETE RISER SHALL BE PLACED IN ONE CONTINUOUS CONCRETE POUR

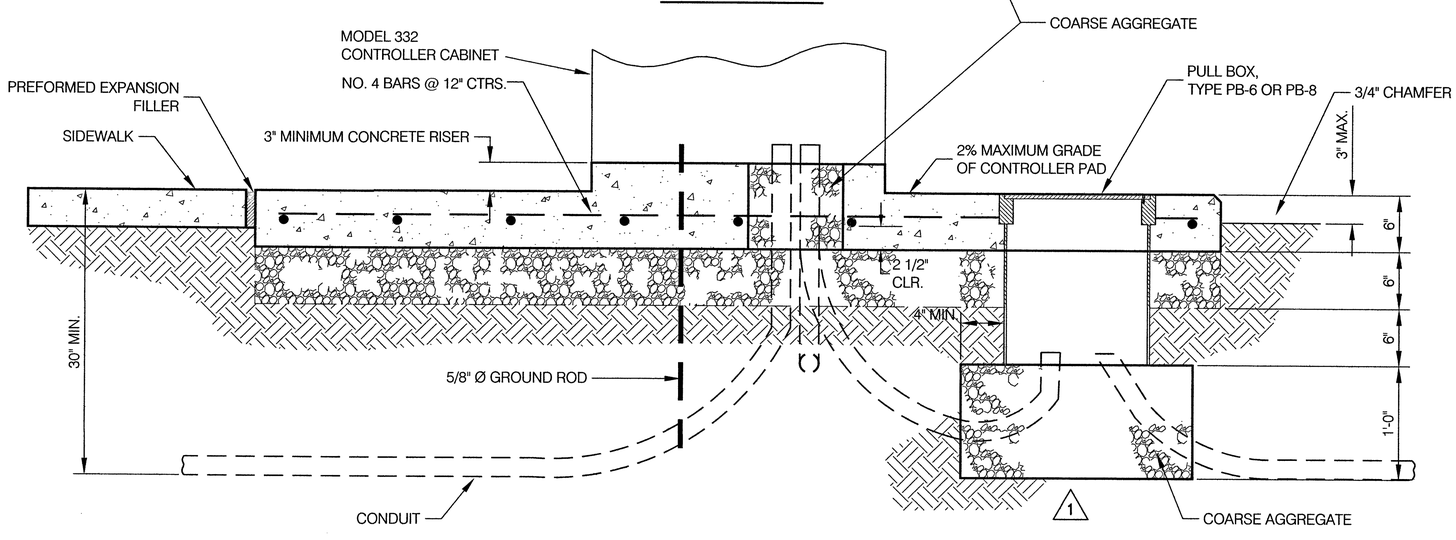

SECTION "A-A"

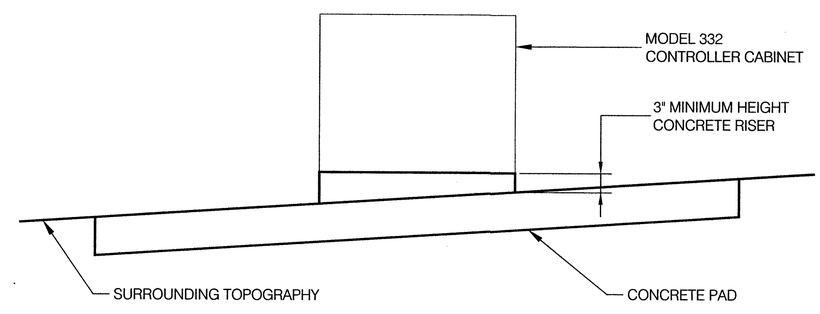

SIDE VIEW

1	6/02/2015	TRAFFIC ENGINEER	CITY OF OMAHA — PUBLIC WORKS DEPARTMENT
	6/11/15	CITY ENGINEER	CONCRETE PAD DETAIL FOR PAD MOUNTED CONTROLLER CABINET — STANDARD PLATE 900-04 — SHEET 1/1 — ISSUE DATE: DECEMBER 10, 2013

TYPE PPM-1
SIGNAL HEAD WITHOUT PEDESTRIAN HEADS

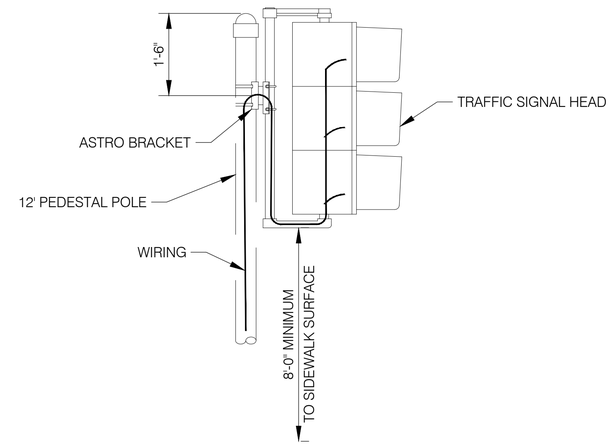

TYPE PPM-2
PEDESTRIAN SIGNAL WITH ONE WAY SIGN

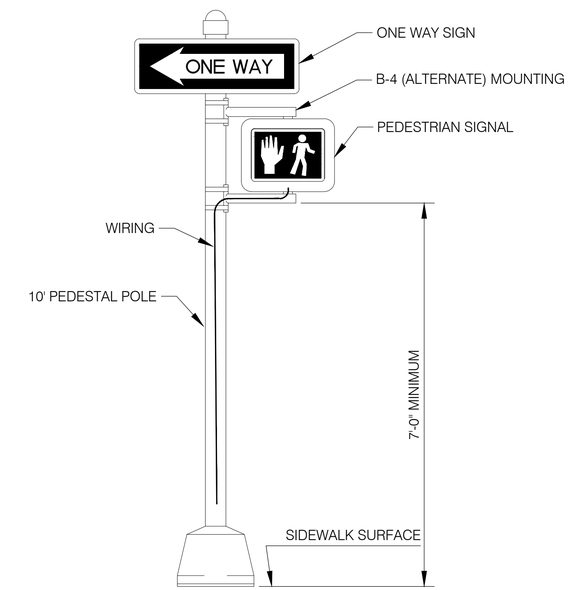

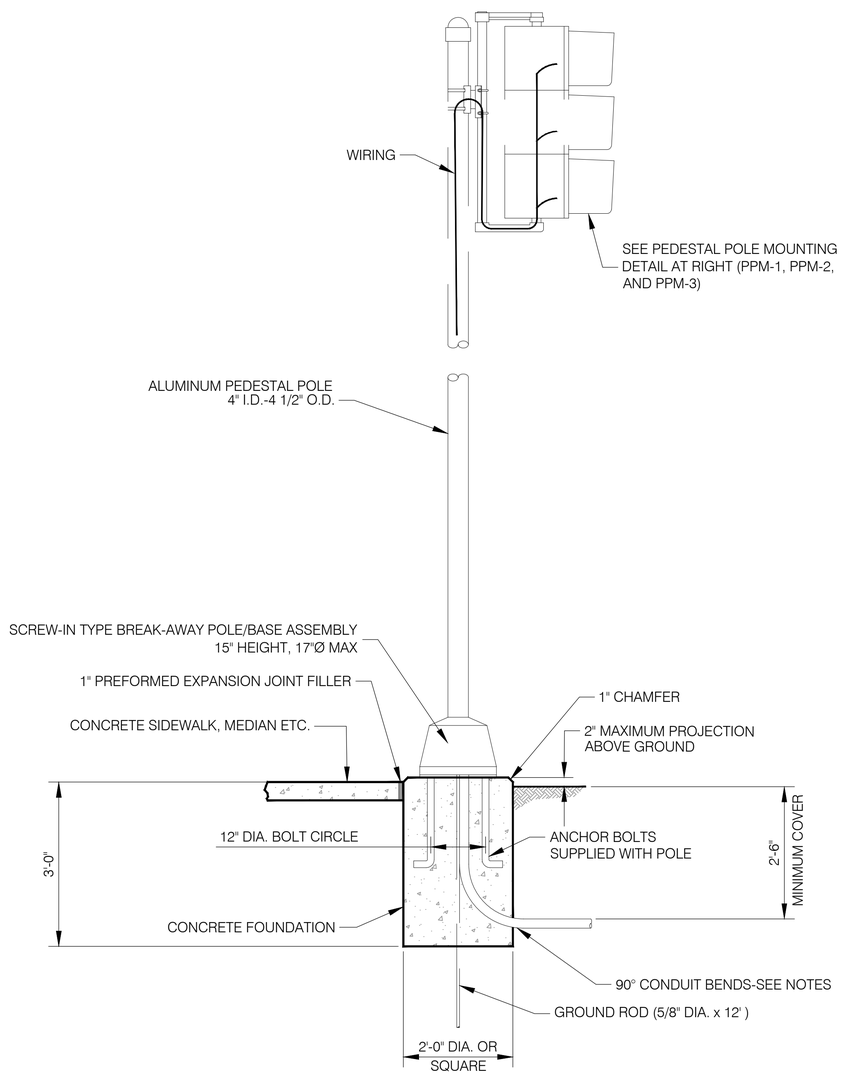

PEDESTAL POLE FOUNDATION

REINFORCING STEEL NOT REQUIRED FOR PEDESTAL POLE FOUNDATION.

TYPE PPM-3
SIGNAL HEAD WITH PEDESTRIAN HEADS

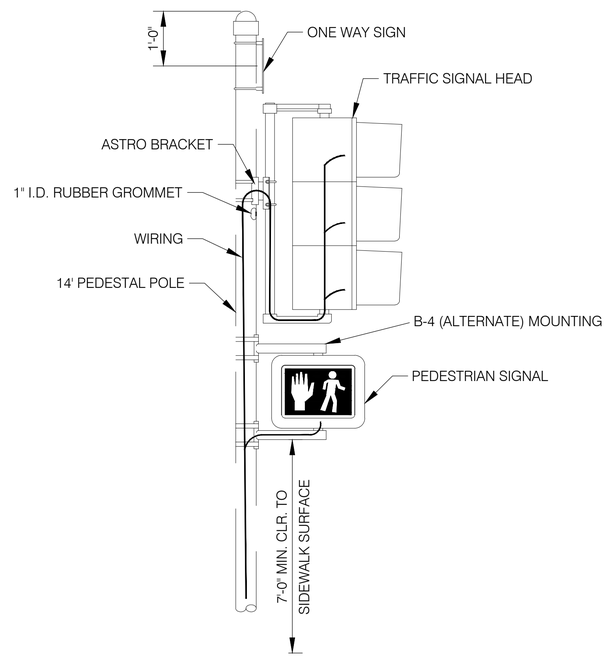

NOTES

1. CONDUIT BENDS SHALL BE 90° WITH 2'-6" MINIMUM GROUND COVER. INSTALL ONE SPARE CONDUIT BEND WITH BOTH ENDS PLUGGED. STANDPIPE CONDUIT SHALL PROJECT 2" MINIMUM ABOVE TOP OF CONCRETE BASE.
2. UNLESS SPECIFIED OTHERWISE, SIGNAL HEADS SHALL BE MOUNTED TO PEDESTAL POLE WITH AN ASTRO BRACKET.
3. BACKPLATES SHALL BE USED AS INDICATED ON THE SIGNAL PLANS.
4. GROUNDING LUG SHALL BE MOUNTED TO THE INSIDE OF PEDESTAL POLE BASE.

	TRAFFIC ENGINEER	CITY OF OMAHA PUBLIC WORKS DEPARTMENT	
		PEDESTAL POLES	STANDARD PLATE 900-10 — SHEET 1/1
	CITY ENGINEER		ISSUE DATE: ..... DECEMBER 10, 2013

L:\Engineering\011010\DOCUMENTS\Standard Plates\ACAD Files from City\REVISED PLATE NUMBERS\PLT-900-10.dwg, 2/19/2014 9:57:28 AM, Hdk, 1:1.03774, Lamp, Rynearson & Associates

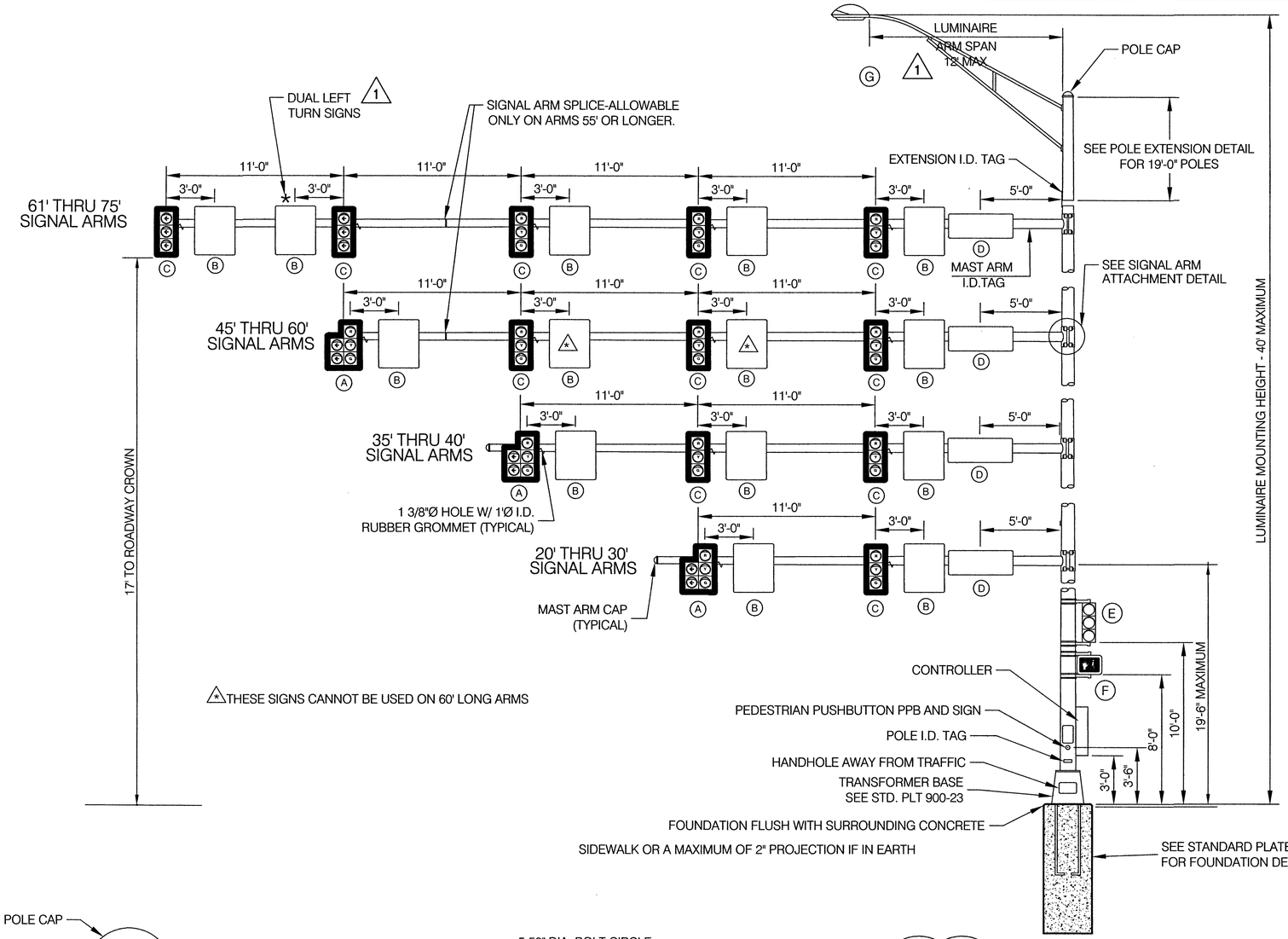

MAST ARM POLE LOADING CHART			
DEVICE	DESCRIPTION	PROJECTING AREA (SQ. FT.)	WEIGHT (LBS.)
A	12" - 5 SEC. SIGNAL WITH BACKPLATES	13.70	116
B	30" x 36" SIGNAL ARM MOUNTED SIGN	7.50	7
C	12" - 3 SEC. SIGNAL WITH BACKPLATES	8.70	60
D	18" x 84" STREET NAME SIGN	10.50	19
E	12" - 3 SEC SIGNAL WITH NO BACKPLATES	4.00	45
F	12" PEDESTRIAN SIGNAL	2.00	25
G	LUMINAIRE ARM	3.3	60

NOTES

1. TRAFFIC SIGNAL MAST ARMS AND POLE SHAFTS SHALL BE SUPPLIED WITH 1" I.D. RUBBER GROMMETS FOR CABLE INLETS. SIGNAL MAST ARMS SHALL ALSO BE SUPPLIED WITH 1" RUBBER GROMMETS FOR THE NUMBER OF SIGNALS SPECIFIED. ALL INLET HOLES SHALL BE DRILLED IN THE FIELD BY THE CONTRACTOR.
2. POLE CAPS SHALL BE PROVIDED WITH EACH POLE SHAFT AND SIGNAL MAST ARM.
3. TRANSFORMER BASES SHALL BE PROVIDED WITH EACH POLE SHAFT FOR MAST ARM LENGTHS OF 60' OR LESS. THE TRANSFORMER BASE SHALL HAVE A HAND HOLE WITH A MINIMUM OPENING OF 8" x 13" AND SHALL BE REINFORCED TO MAINTAIN THE FULL STRENGTH OF THE TRANSFORMER BASE.
4. SIGNAL MAST ARMS SHALL HAVE A MAXIMUM RISE OF 5° UNLOADED AND A MINIMUM RISE OF 0° AT THE END OF THE MAST ARM WHEN FULLY LOADED.
5. EACH POLE SHAFT AND SIGNAL ARM SHALL BE FURNISHED WITH ALL MISCELLANEOUS HARDWARE NECESSARY TO COMPLETE ASSEMBLY.
6. ALL MISCELLANEOUS HARDWARE SHALL BE GALVANIZED TO COMPLY WITH ASTM A153 (EXCEPT THREADED FASTNERS UNDER 3/8 INCH DIAMETER).
7. THE POLE SHAFT AND SIGNAL ARM SHALL BE GALVANIZED TO COMPLY WITH ASTM A123. ONLY SINGLE PIECE SIGNAL ARMS ARE ACCEPTABLE FOR ARM LENGTHS LESS THAN 54'.
8. A GROUNDING NUT FOR ACCOMMODATION OF NO. 6 AWG BASE COPPER WIRE SHALL BE PROVIDED ON THE INSIDE OF THE TRANSFORMER BASE.
9. TRAFFIC SIGNAL POLES SHALL BE DESIGNED TO THE 1994 AASHTO "SPECIFICATIONS FOR THE DESIGN AND CONSTRUCTION OF STRUCTURAL SUPPORTS FOR HIGHWAY SIGNS, LUMINARIES, AND TRAFFIC SIGNALS".
10. A MINIMUM 6" GAP SHALL BE LEFT BETWEEN THE EDGE OF THE SIGN AND THE BACKPLATE ON MAST ARM MOUNTED SIGNS.
11. MAST ARM POLES SHALL BE DESIGNED ACCORDING TO THE MAXIMUM LOADING CHART SHOWN ON THIS STANDARD PLATE.
12. ALL COMBINATION MAST ARM POLES SHALL HAVE SERVICE CONDUCTORS PROVIDED IN THE POLE SHAFT AND LUMINAIRE ARM. THE CONTRACTOR SHALL COMPLETE THE INSTALLATION OF THE LUMINAIRES CIRCUIT TO THE DISCONNECT PEDESTAL. FINAL LUMINAIRE TURN ON SHALL BE MADE BY O.P.P.D.

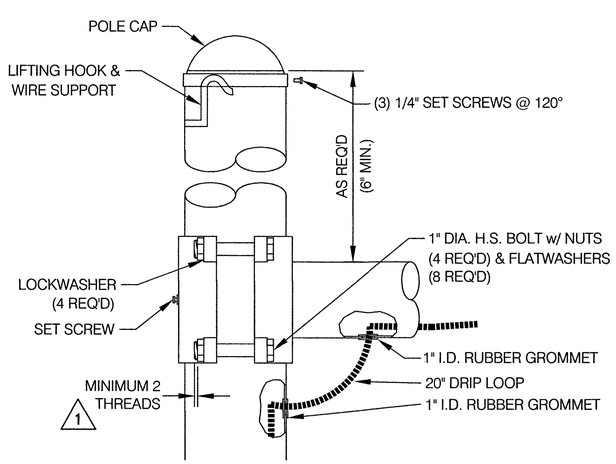

SIGNAL ARM ATTACHMENT

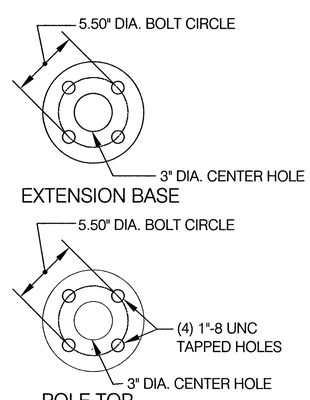

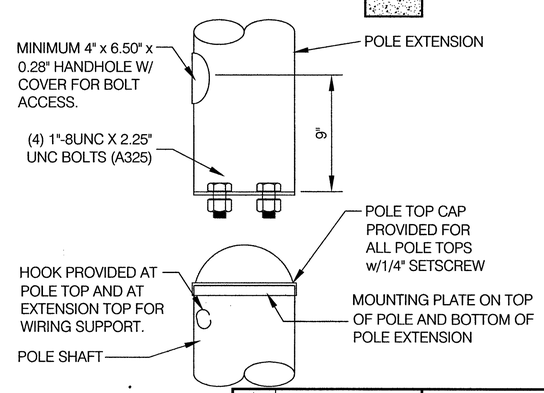

POLE EXTENSION FOR 19'-0" POLES

POLE I.D. TAG

MFR DATE
OMA-1

- POLE CLASS (1, 2, OR 3)
- OMAHA POLE SERIES

NOTE: TAG LOCATED 6" FROM BASE OF POLE.

MAST ARM I.D. TAG

MFR DATE
OMA-1-20

- ARM SPAN (20 THRU 55)
- POLE CLASS (1, 2, OR 3)
- OMAHA POLE SERIES

NOTE: TAG LOCATED ON BOTTOM SIDE OF ARM

POLE EXTENSION I.D. TAG

MFR DATE
OMA-EXT-30-6

- LUM. ARM SPAN (0, 6, 12)
- MTG. HTG. (30' OR 40')
- POLE EXTENSION
- OMAHA POLE SERIES

NOTE: TAG LOCATED 6" FROM EXT. BASE, AND 180° FROM HANDHOLD

IDENTIFICATION TAGS

1	6/02/2015	Murthy Kota TRAFFIC ENGINEER	CITY OF OMAHA — PUBLIC WORKS DEPARTMENT
	6/11/15	Todd Pfeifer CITY ENGINEER	MAST ARM POLES — STANDARD PLATE 900-20 — SHEET 1/1 — ISSUE DATE: ..... DECEMBER 10, 2013

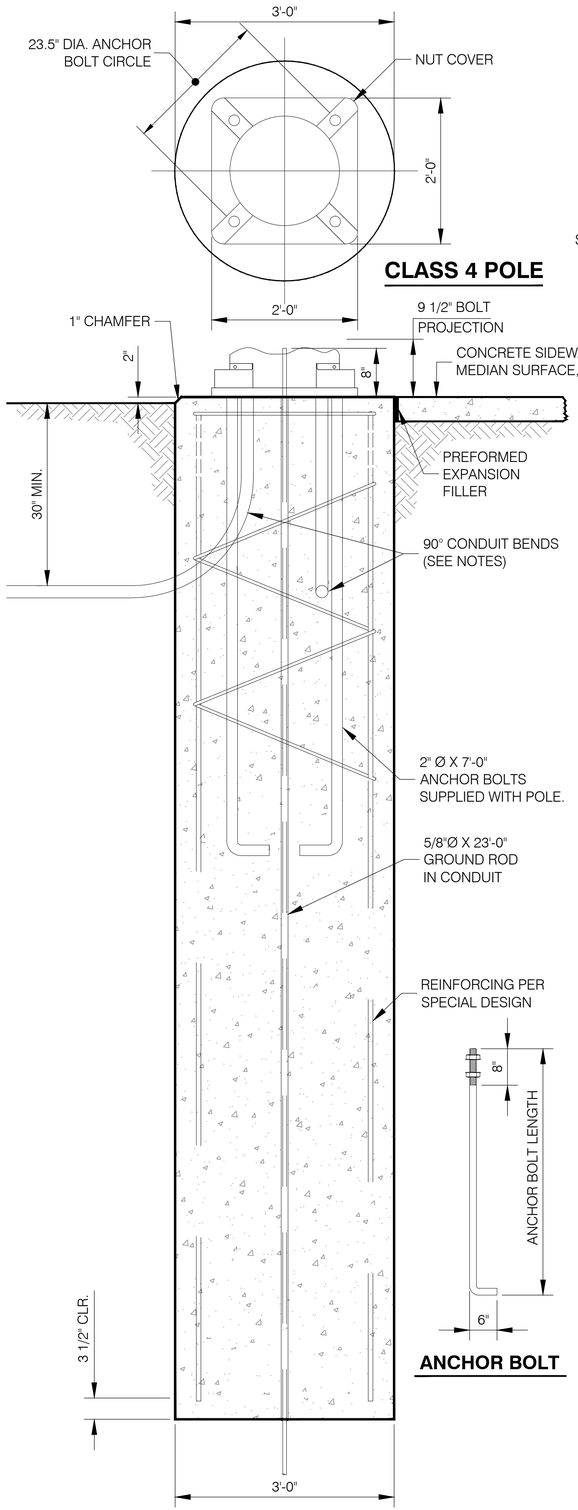

CLASS 4 POLE

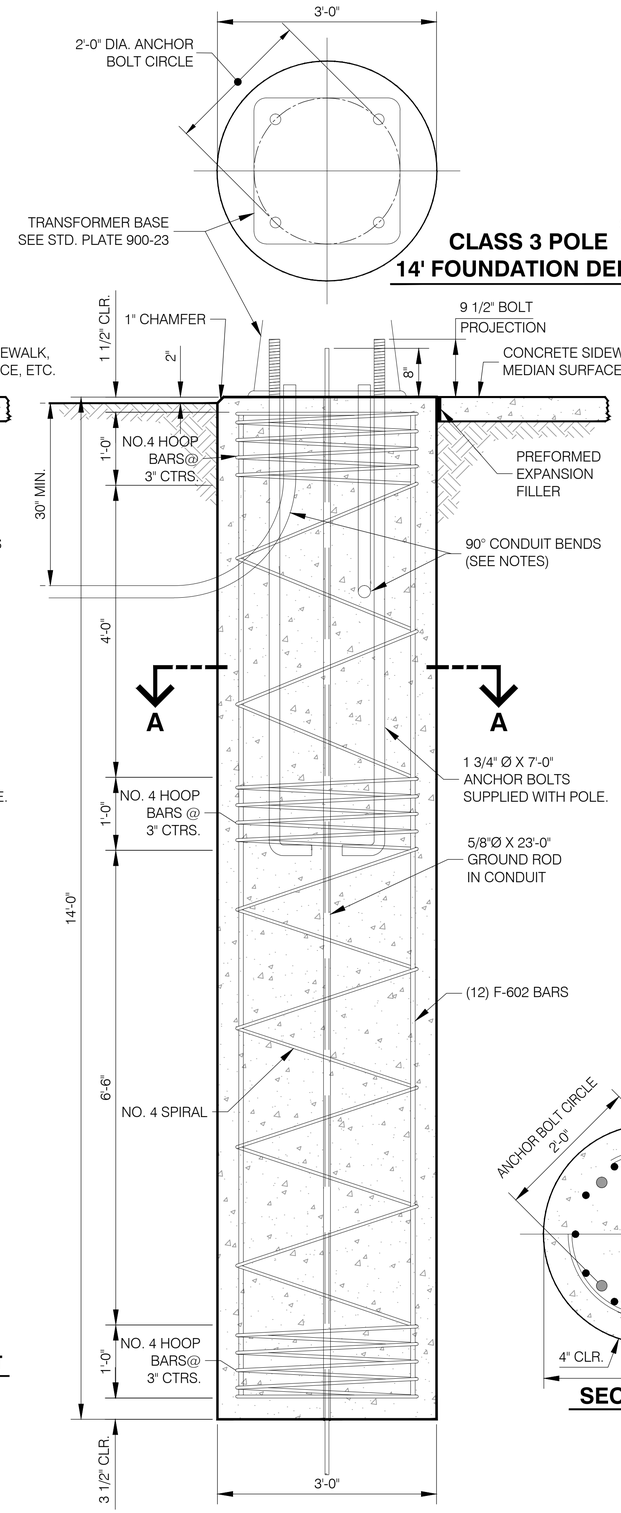

CLASS 3 POLE
14' FOUNDATION DEPTH

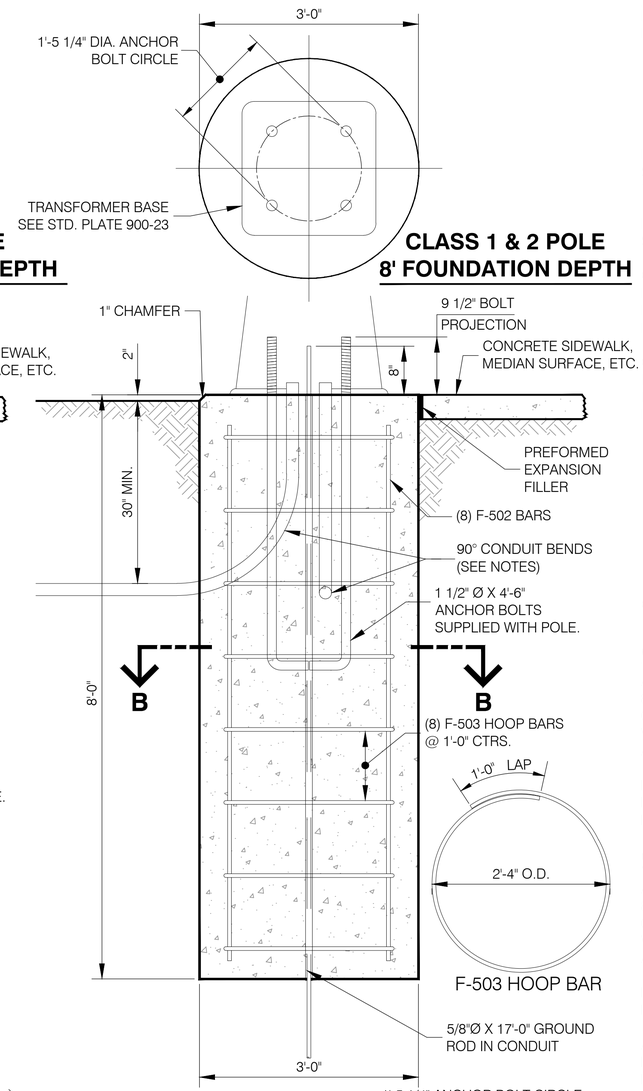

CLASS 1 & 2 POLE
8' FOUNDATION DEPTH

F-503 HOOP BAR

ANCHOR BOLT

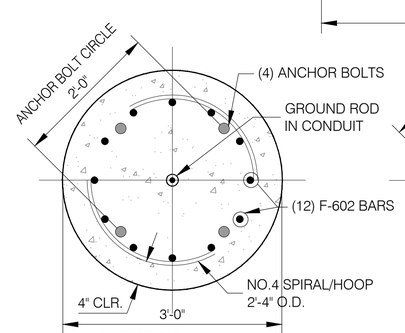

SECTION A-A

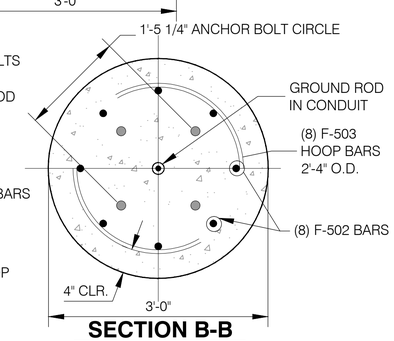

SECTION B-B

FOUNDATION NOTES ---- ALL CLASSES

POLE FOUNDATION TYPE TO BE USED SHALL BE DETERMINED FROM THE FOLLOWING:

POLE CLASS	MAST-ARM LENGTH	FOUNDATION DEPTH
CLASS 1	20 TO 30 FT.	8 FT. DEPTH
CLASS 2	35 TO 40 FT.	8 FT. DEPTH
CLASS 3	45 TO 60 FT.	14 FT. DEPTH
CLASS 4	61 TO 75 FT.	

POLE FOUNDATIONS SHALL CONFORM TO SECTION 900 OF THE STANDARD SPECIFICATIONS. POLE FOUNDATIONS SHALL BE ROUND. ONLY THE TOP TWO FEET MAY BE FORMED.

PORTLAND CEMENT CONCRETE SHALL CONFORM TO SECTIONS 900 OF THE STANDARD SPECIFICATIONS.

GROUND ROD SHALL BE PLACED PRIOR TO CONCRETE PLACEMENT. THE ROD SHALL PROJECT EIGHT INCHES MINIMUM ABOVE TOP OF FINISHED FOUNDATION AND SHALL EXTEND EIGHT FEET MINIMUM BELOW THE FOUNDATION BOTTOM.

CONDUIT BENDS SHALL BE 90 DEGREES. CONDUIT SHALL BE LOCATED 30 INCHES MINIMUM BELOW GROUND LEVEL. SPARE CONDUITS SHALL BE INSTALLED IN EACH FOUNDATION WITH BOTH ENDS PLUGGED AND FREE OF MOISTURE CONFORMING TO THE FOLLOWING:

POLE TYPE	NO. OF SPARE CONDUIT BENDS	CONDUIT SIZE
M.P. OR C.M.P. WITH OR WITHOUT CONTROLLER	* 3	(* 3) 2"

*QUANTITY MAY BE REDUCED TO ONE WHEN STREET LIGHTING CONDUIT IS SHOWN ON CONSTRUCTION PLANS.

CONDUIT SHALL PROJECT 2" ABOVE TOP OF FINISHED FOUNDATION.

CLASS 1 & 2 POLES ---- 8' FOUNDATION DEPTH

ANCHOR BOLTS SHALL BE 1 1/2" DIA. X 4'-6" LONG AS SHOWN WITH THE TOP 8" THREADED. THE TOP 12" MINIMUM SHALL BE GALVANIZED. ANCHOR BOLT CIRCLE SHALL BE 1'-5 1/4" IN DIAMETER. ANCHOR BOLTS SHALL BE SUPPLIED WITH TWO HEX NUTS AND TWO FLAT WASHERS.
ANCHOR BOLTS SHALL BE 50,000 PSI MINIMUM YIELD STRENGTH.

REINFORCING STEEL
F-502 ..... NO. 5 BARS x 7'-4", ... 8 PER FOUNDATION
F-503 ..... NO. 5 HOOP BARS AS SHOWN, 8 PER FOUNDATION

CLASS 3 POLE ---- 14' FOUNDATION DEPTH

ANCHOR BOLTS SHALL BE 1 3/4" DIA. X 7'-0" LONG AS SHOWN WITH THE TOP 8" THREADED. THE TOP 12" MINIMUM SHALL BE GALVANIZED. ANCHOR BOLT CIRCLE SHALL BE 2'-0" IN DIAMETER. ANCHOR BOLTS SHALL BE SUPPLIED WITH TWO HEX NUTS AND TWO FLAT WASHERS.
ANCHOR BOLTS SHALL BE 60,000 PSI MINIMUM YIELD STRENGTH.

REINFORCING STEEL
F-602 ..... NO. 6 BARS x 13'-4", 12 PER FOUNDATION

ALTERNATE REINFORCING:
NO. 4 HOOP BARS, 2'-4" DIAMETER SPACED AT 8" CENTERS MAY BE USED IN LIEU OF THE NO. 4 SPIRAL.

CLASS 4 POLE

FOUNDATION DESIGN
CONTRACTOR SHALL PROVIDE DESIGN FOR ALL ARM LENGTHS LONGER THAN 61'. DESIGN SHALL BE COMPLETED AND STAMPED BY A NEBRASKA REGISTERED PROFESSIONAL ENGINEER.

ANCHOR BOLTS (MAST ARM FOUNDATION ONLY)
ANCHOR BOLTS SHALL BE 2" X 7'-0" AND SHALL BE THREADED. THE TOP 12" MINIMUM SHALL BE GALVANIZED. ANCHOR BOLT CIRCLE SHALL BE 23.5" IN DIAMETER. EACH ANCHOR BOLT SHALL BE SUPPLIED WITH TWO HEXAGONAL NUTS AND TWO FLAT WASHERS. ANCHOR BOLTS SHALL BE 55 KSI MINIMUM YIELD STRENGTH.

CONCRETE
AS SPECIFIED IN THE FOUNDATION DESIGN.

REINFORCING STEEL
AS SPECIFIED IN THE FOUNDATION DESIGN.

TRAFFIC ENGINEER

CITY ENGINEER

CITY OF OMAHA PUBLIC WORKS DEPARTMENT

MAST ARM POLE FOUNDATION

STANDARD PLATE 900-22 SHEET 1/1

ISSUE DATE: ..... DECEMBER 10, 2013

L:\Engineering\011010\DOCUMENTS\Standard Plates\ACAD Files from City\REVISED PLATE NUMBERS\PLT-900-22.dwg, 2/19/2014 10:03:32 AM, rickk, 1:1.03774, Lamp, Rynearson & Associates

IDENTIFICATION TAG

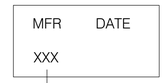

NOTE: I.D.TAG LOCATED ON OPPOSITE SIDE OF BASE FROM DOOR OPENING.

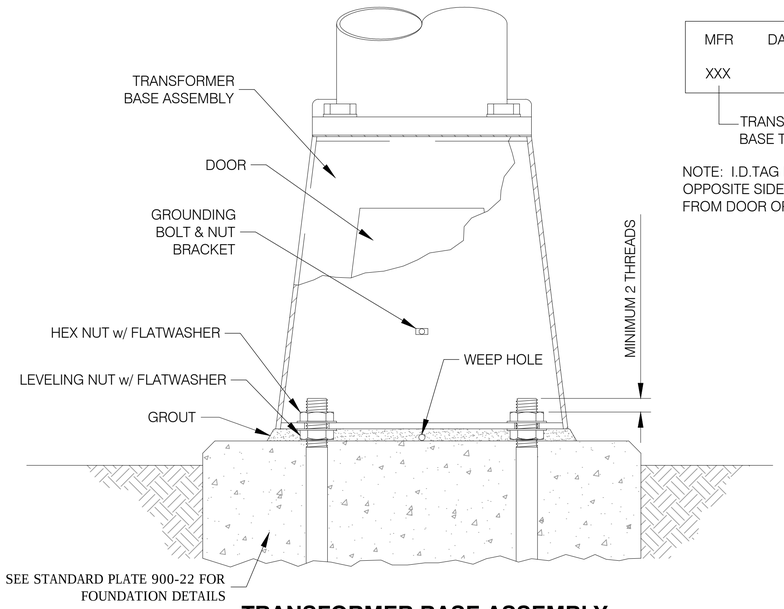

TRANSFORMER BASE ASSEMBLY

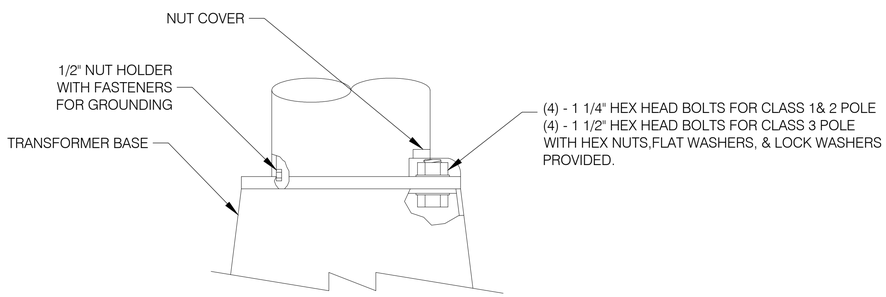

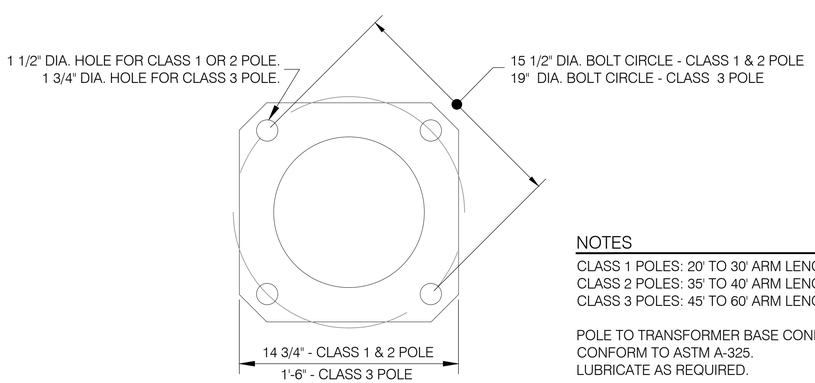

POLE BASE

NOTES

CLASS 1 POLES: 20' TO 30' ARM LENGTH
CLASS 2 POLES: 35' TO 40' ARM LENGTH
CLASS 3 POLES: 45' TO 60' ARM LENGTH

POLE TO TRANSFORMER BASE CONNECTION BOLTS SHALL CONFORM TO ASTM A-325.
LUBRICATE AS REQUIRED.

CLASS 1 & 2 TRANSFORMER BASE

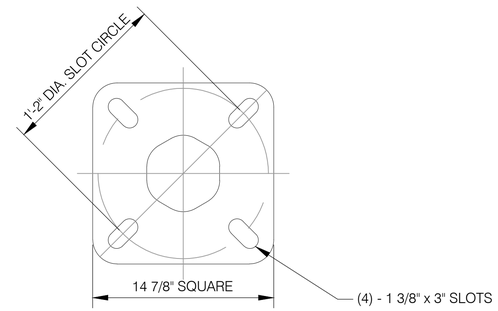

TOP PLAN

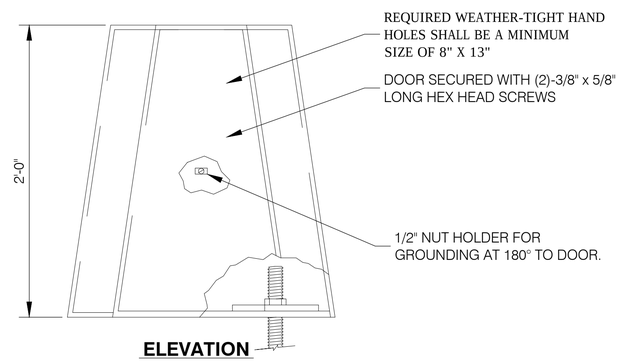

ELEVATION

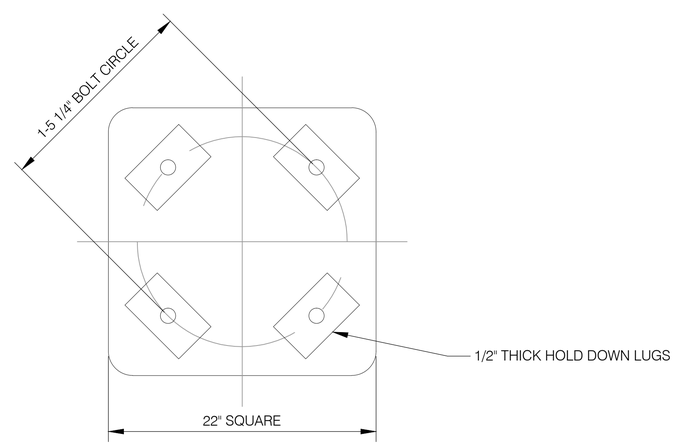

BOTTOM PLAN

CLASS 3 TRANSFORMER BASE

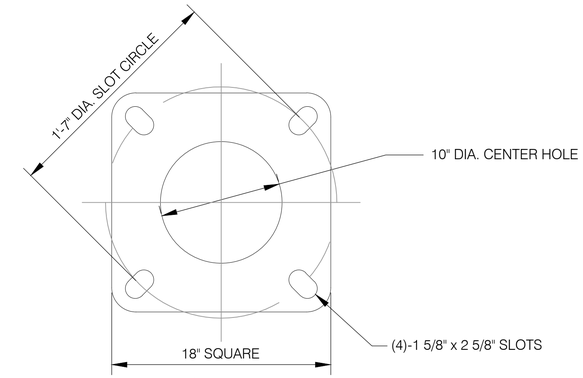

TOP PLAN

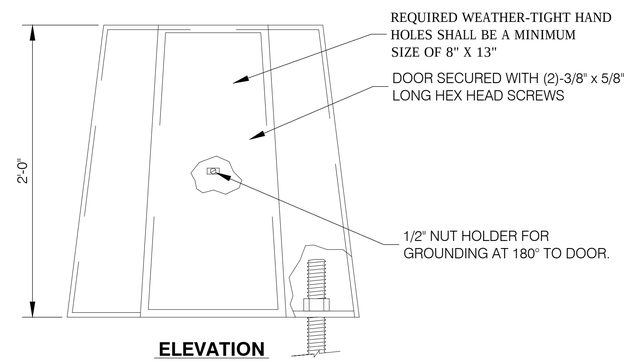

ELEVATION

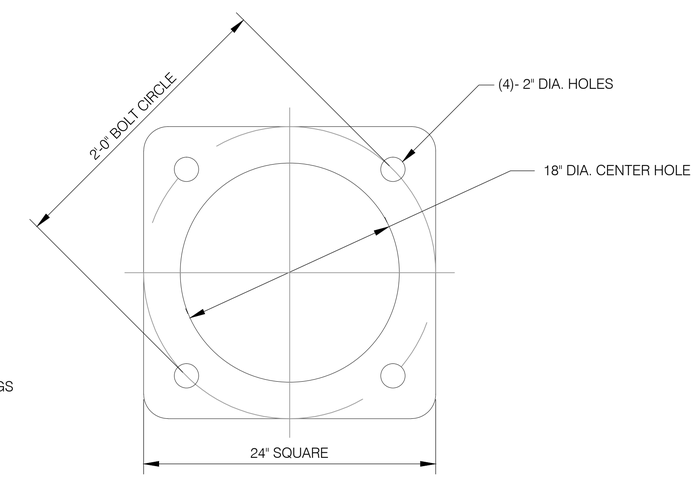

BOTTOM PLAN

TRAFFIC ENGINEER	CITY OF OMAHA PUBLIC WORKS DEPARTMENT	
CITY ENGINEER	MAST ARM TRANSFORMER BASE	STANDARD PLATE 900-23 — SHEET 1/1 — ISSUE DATE: ..... DECEMBER 10, 2013

L:\Engineering\011010\DOCUMENTS\Standard Plates\ACAD Files from City\REVISED PLATE NUMBERS\PL T-900-23.dwg, 2/19/2014 10:05:30 AM, rekk, 1:1.03774, Lamp, Rynearson & Associates

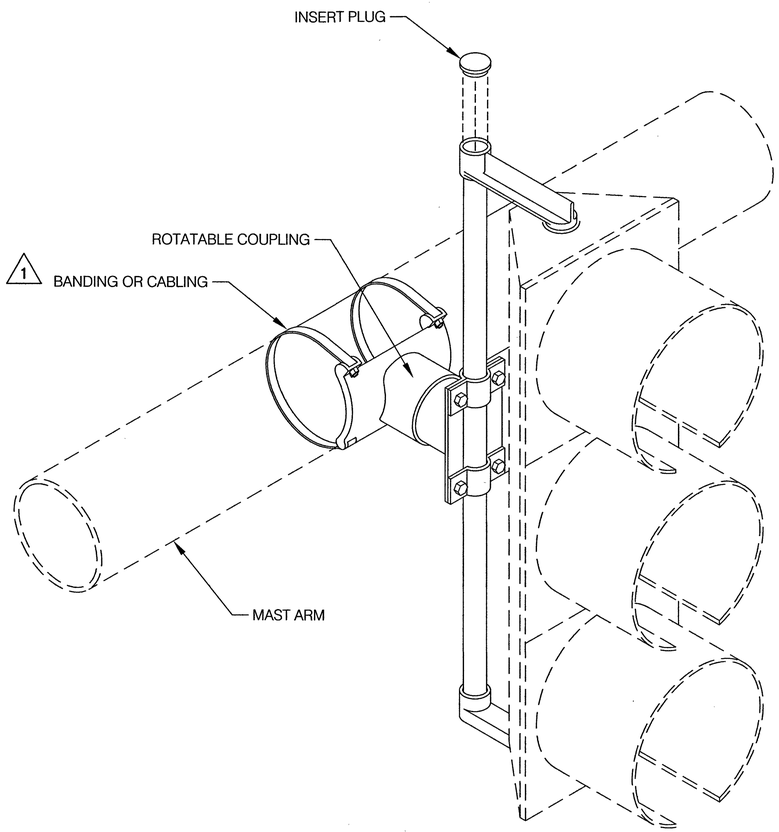

TYPE MA-5
ADJUSTABLE MAST ARM MOUNTING
-- HORIZONTAL OR VERTICAL INSTALATION --

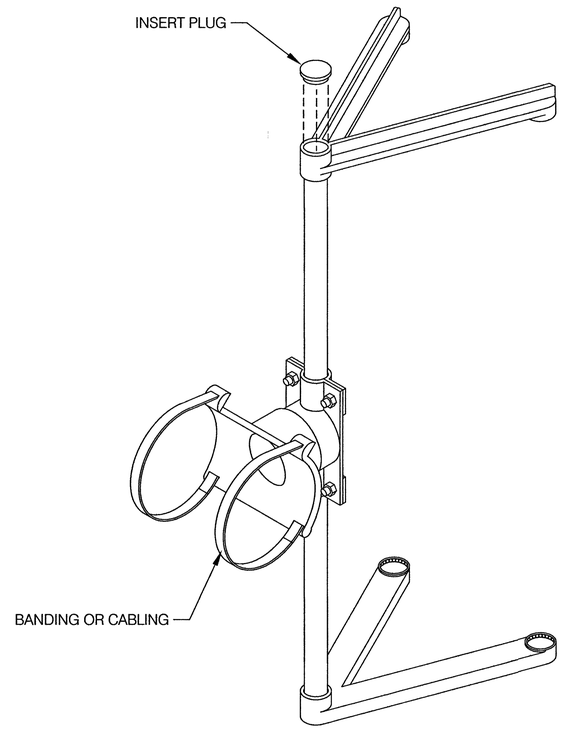

TYPE MA-5-1
SIGNAL MOUNTING HARDWARE

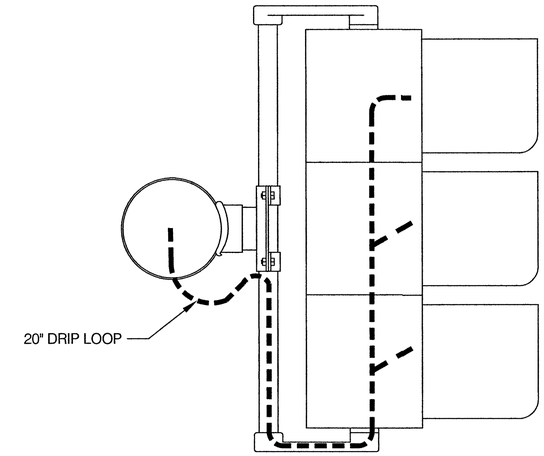

WIRING DIAGRAM

NOTES

1. TRAFFIC SIGNALS SHALL BE INSTALLED IN CONFORMANCE WITH SECTION 900 OF THE STANDARD SPECIFICATIONS.
2. ALL SIGNAL HEADS SHALL BE MOUNTED IN SUCH A MANNER SO THEY MAY BE EASILY REMOVED FROM THEIR SUPPORTING STRUCTURE.
3. UNLESS OTHERWISE SPECIFIED IN THE PLANS, TRAFFIC SIGNAL HEADS SHALL BE MOUNTED AT THE FOLLOWING HEIGHTS MEASURED TO THE BOTTOM OF THE SIGNAL HEAD HOUSING OR BACKPLATE:
   SIGNAL HEADS ABOVE ROADWAY:..... 17'-0"
   SIDE MOUNTED SIGNAL HEADS:.....10'-0"
   PEDESTRIAN SIGNAL HEADS:..... 8'-0"
4. SIGNAL HEADS SHALL BE SECURELY FIXED AND PLUMB TO THEIR RESPECTIVE POSITIONS.
5. OVERHEAD SIGNAL MOUNTING HARDWARE SHALL BE BANDED OR CABLED. SIDE MOUNTED SIGNAL MOUNTING HARDWARE SHALL BE APPROPRIATE SIZED BAND MOUNTED ONLY. OVERHEAD SIGNAL MOUNTING HARDWARE SHALL BE UNIFORM THROUGHOUT THE INTERSECTION.
6. ANTI-SIEZE COMPOUND SHALL BE ADDED TO ALL ASTROBRACKET MOUNTING CONNECTIONS DURING INSTALLATION.

1	6/02/2015	TRAFFIC ENGINEER	CITY OF OMAHA PUBLIC WORKS DEPARTMENT	
	6/11/15	CITY ENGINEER	MAST ARM SIGNAL MOUNTING	STANDARD PLATE 900-24 — SHEET 1/1 — ISSUE DATE: ..... DECEMBER 10, 2013

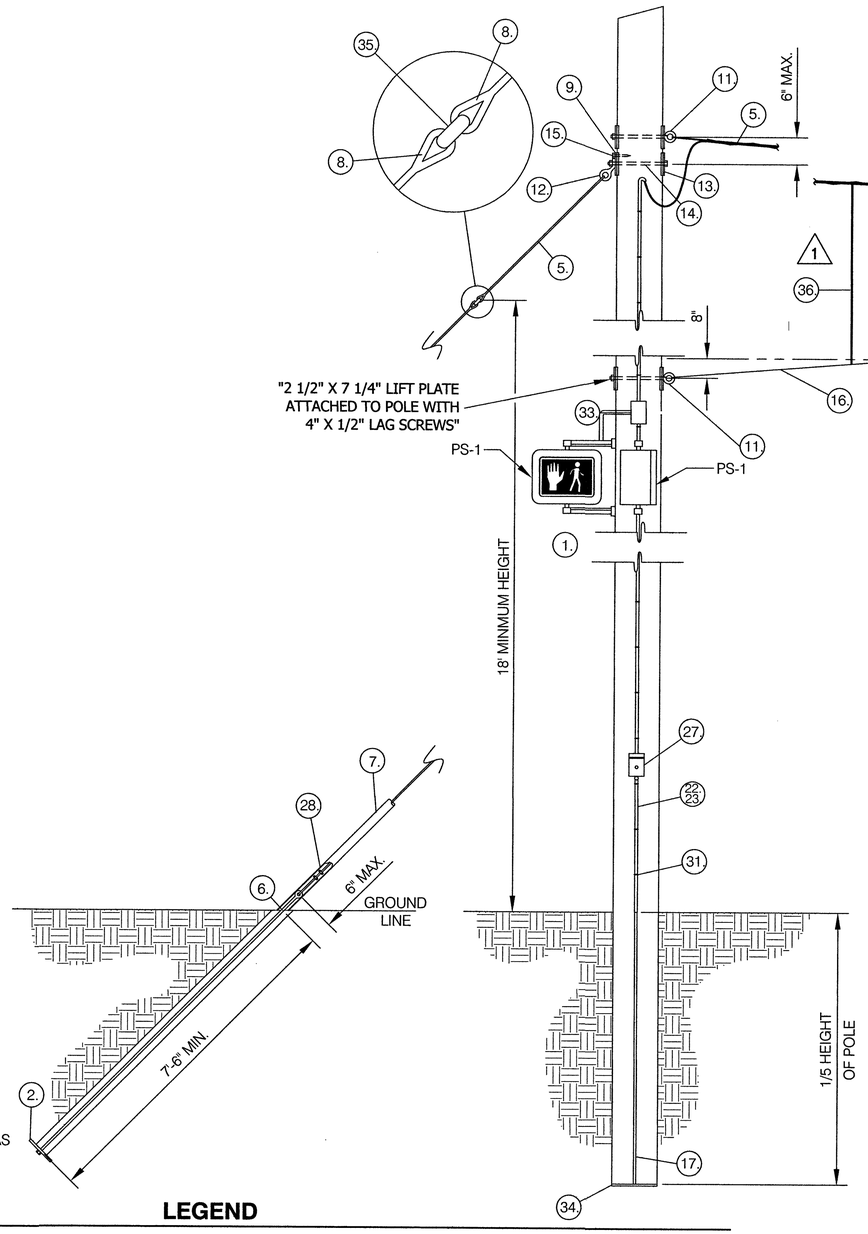

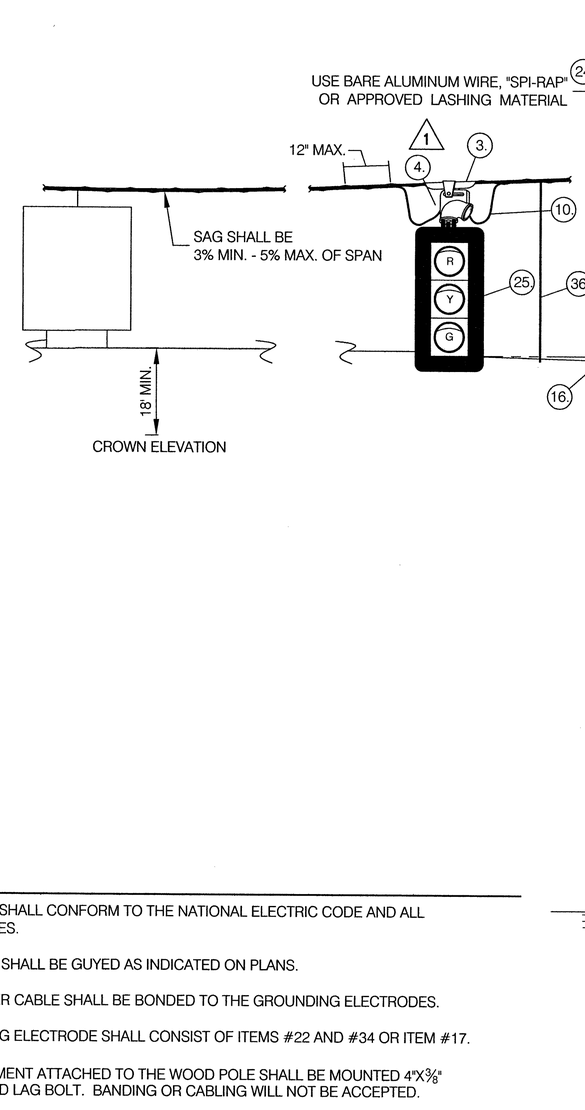

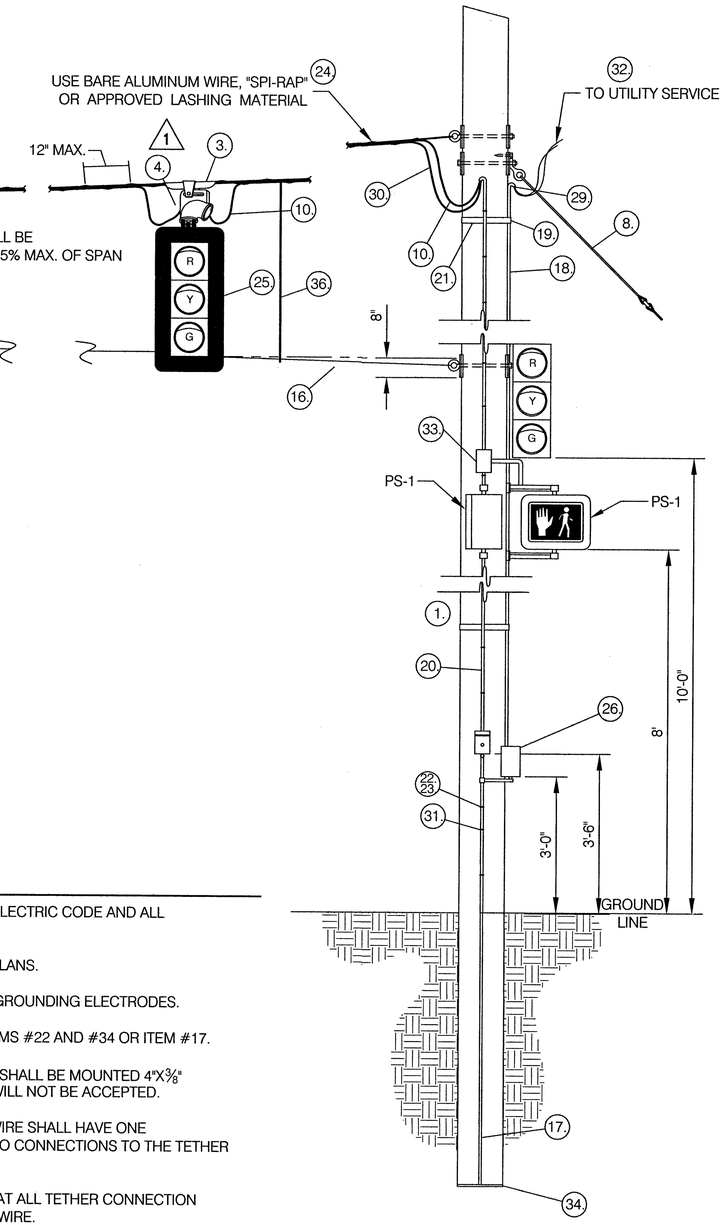

DIG OR BORE HOLE OF AS SMALL A DIAMETER AS PRACTICABLE. AFTER ANCHOR IS IN PLACE BACKFILL SHALL BE PLACED IN LAYERS NOT TO EXCEED 10" IN DEPTH AND THOROUGHLY COMPACTED.

NOTES

1. ALL WORK SHALL CONFORM TO THE NATIONAL ELECTRIC CODE AND ALL ORDINANCES.
2. ALL POLES SHALL BE GUYED AS INDICATED ON PLANS.
3. MESSENGER CABLE SHALL BE BONDED TO THE GROUNDING ELECTRODES.
4. GROUNDING ELECTRODE SHALL CONSIST OF ITEMS #22 AND #34 OR ITEM #17.
5. (1) ALL EQUIPMENT ATTACHED TO THE WOOD POLE SHALL BE MOUNTED 4"X3/8" GALVANIZED LAG BOLT. BANDING OR CABLING WILL NOT BE ACCEPTED.
6. (1) ALL OVERHEAD SIGNS MOUNTED TO THE SPAN WIRE SHALL HAVE ONE CONNECTION TO THE MESSENGER WIRE AND TWO CONNECTIONS TO THE TETHER WIRE.
7. (1) A 12" TETHER CABLE WRAP SHALL BE INCLUDED AT ALL TETHER CONNECTION POINTS TO PREVENT BREAKAGE OF THE TETHER WIRE.

LEGEND

ITEM	DESCRIPTION
1.	CLASS 4 BUTT TREATED POLES OR AS SHOWN
2.	8" - 3 WAY ANCHOR
3.	WIRE ROPE SADDLE
4.	SINGLE ENTRANCE HANGER, TYPE SW-1
5.	3/8" HIGH STRENGTH 7 STRAND GUY WIRE
6.	5/8" x 8'-0" MINIMUM THIMBLEYE ANCHOR RODS
7.	8'-0" HALF ROUND GUY GUARD
8.	PREFORMED DEADEND
9.	2 1/2" x 7" x 1/4" LIFT PLATES
10.	DRIP LOOP
11.	3/4" THIMBLEYE BOLT STRAIGHT
12.	ANGLE THIMBLEYE FOR 3/4" BOLT
13.	3" x 3" x 1/4" SQUARE CURVED WASHERS
14.	3/4" MACHINE BOLTS LENGTH AS REQUIRED
15.	1/2" x 4" LAG SCREWS
16.	TETHER CABLE SHALL BE 1/4" SIEMANS MARTIN GRADE
17.	5/8" x 10" GROUND ROD AND CLAMP (NOMINAL 5/8")
18.	3/4" GALVANIZED CONDUIT CONTAINING UTILITY SERVICE WIRES
19.	1 1/4" GALVANIZED PIPE STRAPS
20.	1 1/2" GALVANIZED CONDUIT CONTAINING SIGNAL CABLES
21.	1 1/2" GALVANIZED PIPE STRAPS
22.	NO. 6 AWG COPPER GROUND WIRE
23.	GROUND WIRE MOLD LENGTH AS REQUIRED
24.	LASHING MATERIAL
25.	TRAFFIC SIGNAL TYPE TS-1 W/T31 FACE (W/LED LAMPS)
26.	SIGNAL CONTROLLER AND CABINET
27.	PEDESTRIAN PUSHSBUTTON, PPB
28.	PRE-FORMED GUY DEAD END (ALTERNATE)
29.	SERVICE ENTRANCE WITH COVER
30.	600 VOLT NO. 14 AWG 7/C TRAFFIC SIGNAL CABLE
31.	GROUND WIRE STAPLES
32.	POWER SERVICE CABLE #6 AWG COPPER
33.	SPLICE BOX 12"X12"x6" MIN.
34.	COPPER PLATE
35.	INSULATOR
36.	TETHER ASSEMBLY WITH EXTENDER MOUNTED AT EDGE OF PAVEMENT (1)

1	6/02/2015	TRAFFIC ENGINEER	CITY OF OMAHA — PUBLIC WORKS DEPARTMENT
	6/11/15	CITY ENGINEER	WOOD POLE SUPPORT CABLE — STANDARD PLATE 900-30 — SHEET 1/2
			ISSUE DATE: ..... DECEMBER 10, 2013

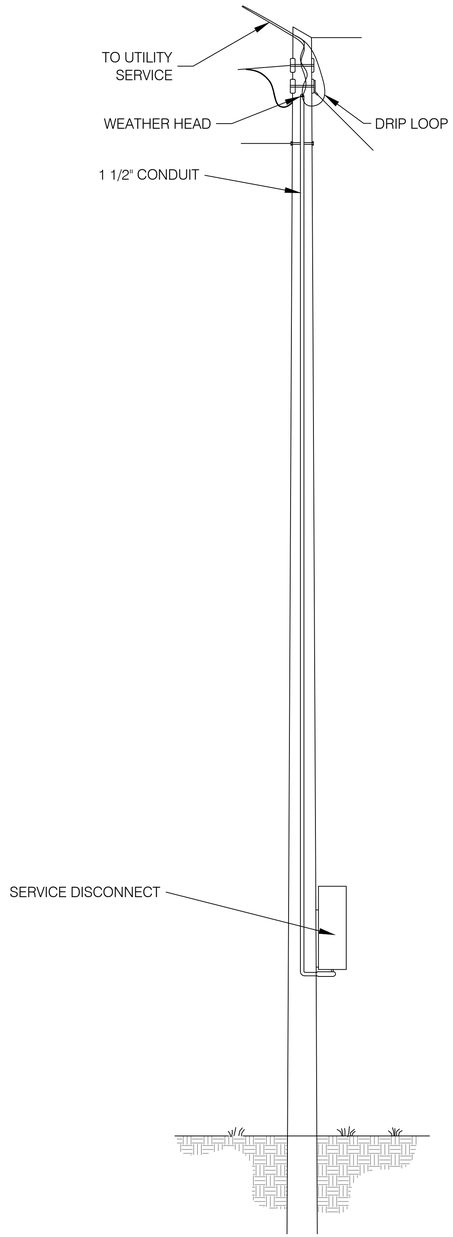

OVERHEAD SERVICE CONNECTION

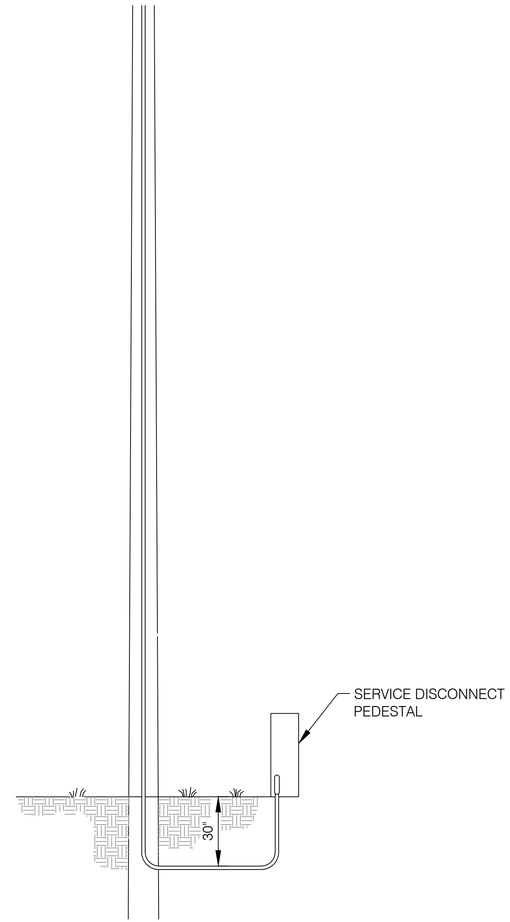

UNDERGROUND SERVICE CONNECTION

NOTES

1. ALL WORK SHALL CONFORM TO THE NATIONAL ELECTRIC CODE AND ALL ORDINANCES.
2. ALL POLES SHALL BE GUYED AS INDICATED ON PLANS.

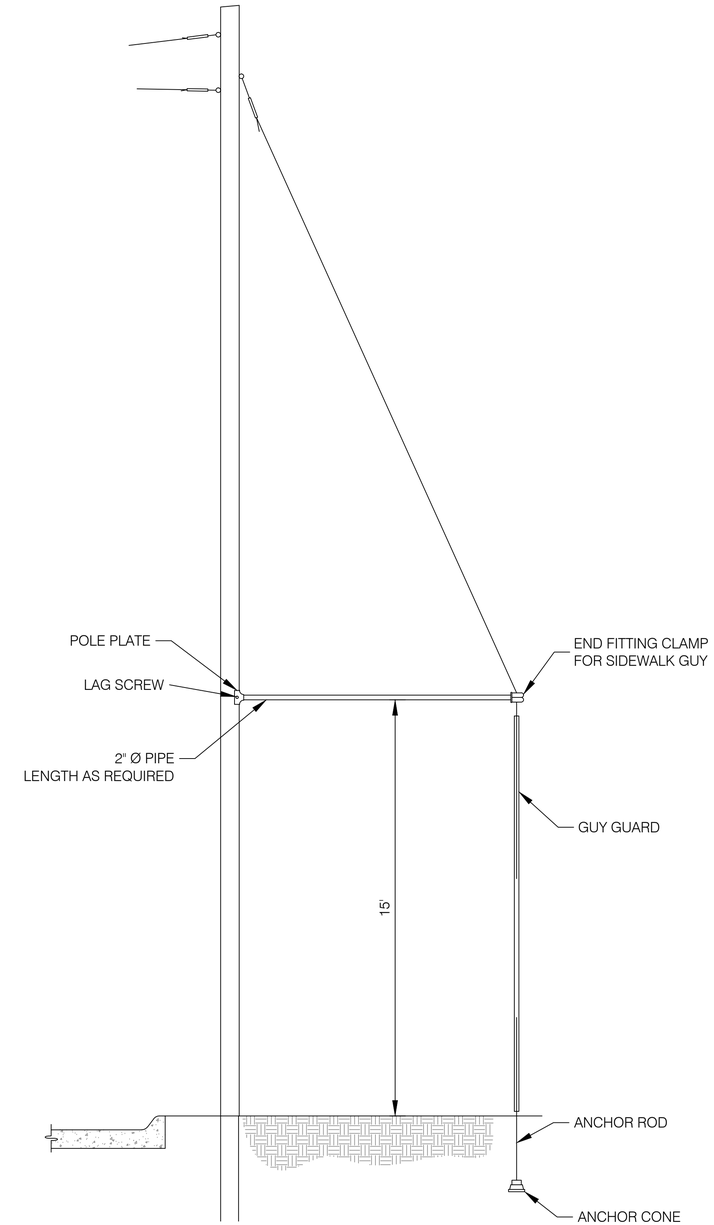

TYPICAL SIDEWALK GUY

TRAFFIC ENGINEER	CITY OF OMAHA PUBLIC WORKS DEPARTMENT	
CITY ENGINEER	WOOD POLE SUPPORT CABLE	STANDARD PLATE 900-30 — SHEET 2/2
		ISSUE DATE: ..... DECEMBER 10, 2013

L:\Engineering\011\012\DOCUMENTS\Standard Plates\ACAD Files from City\REVISED PLATE NUMERS\PLT-900-30 (2).dwg, 3/6/2014 2:08:19 PM, rick, 1:1.0241, Lamp, Rynearson & Associates

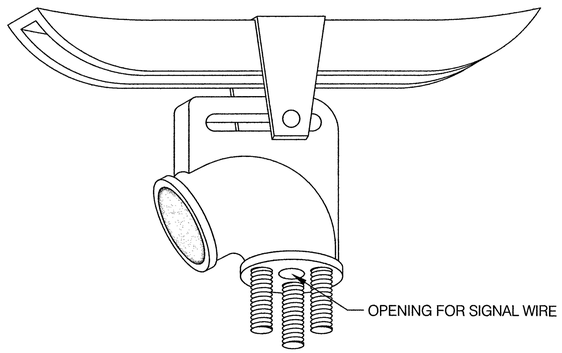

SW - 1
SINGLE ENTRANCE HANGER

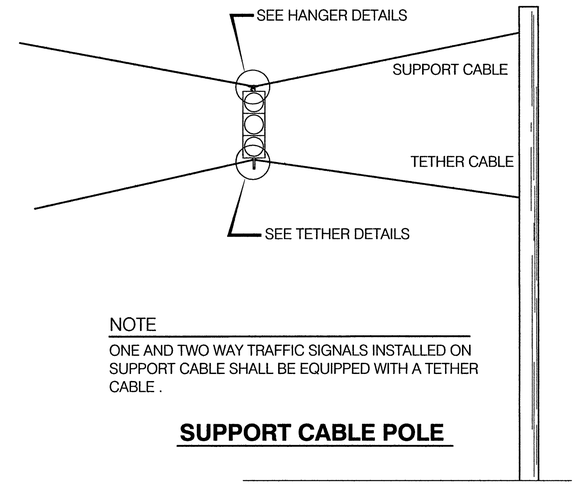

NOTE

ONE AND TWO WAY TRAFFIC SIGNALS INSTALLED ON SUPPORT CABLE SHALL BE EQUIPPED WITH A TETHER CABLE .

SUPPORT CABLE POLE

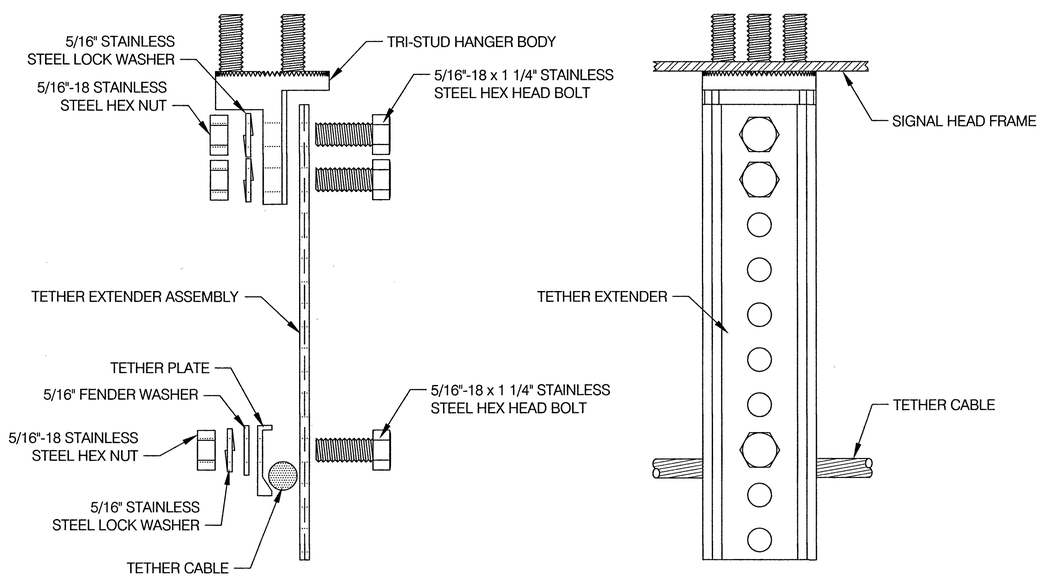

END VIEW **FRONT VIEW**

TETHER ASSEMBLY DETAIL WITH EXTENDER

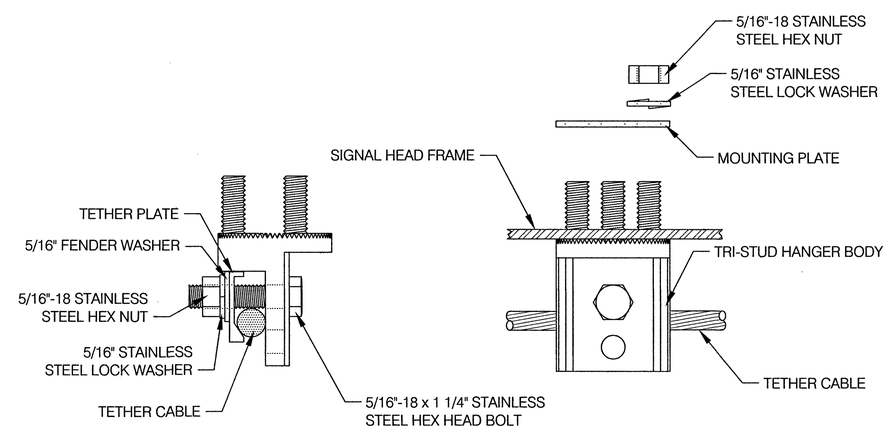

END VIEW **FRONT VIEW**

TETHER ASSEMBLY DETAIL

1	6/02/2015	TRAFFIC ENGINEER	CITY OF OMAHA PUBLIC WORKS DEPARTMENT		
	6/11/15	CITY ENGINEER	**SUPPORT CABLE MOUNTING**	STANDARD PLATE **900-32**	SHEET 1/1
				ISSUE DATE: ..... DECEMBER 10, 2013	

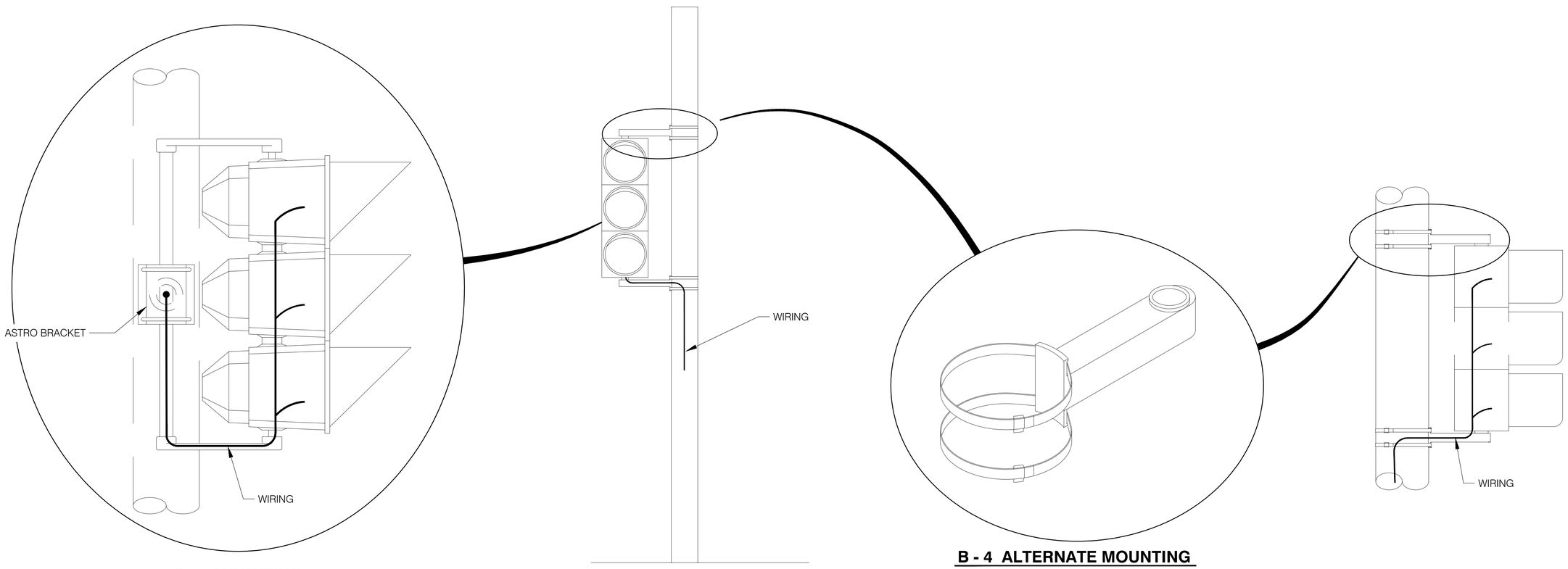

B - 5 MOUNTING
FOR SIDE MOUNT OPTICALLY
PROGRAMMED SIGNAL HEADS

CABLE GROMMET NEEDED
ON ENTRANCE BRACKET ONLY.

B - 4 ALTERNATE MOUNTING

TRAFFIC ENGINEER	CITY OF OMAHA PUBLIC WORKS DEPARTMENT	
	POLE BRACKET INSTALLATION	**STANDARD PLATE 900-40** SHEET 1/1
CITY ENGINEER		ISSUE DATE: ..... DECEMBER 10, 2013

L:\Engineering\011010\02\DOCUMENTS\Standard Plates\ACAD Files from City\REVISED PLATE NUMERS\PLT-900-40.dwg, 2/19/2014 10:17:52 AM, rekk, 1:1.03774, Lamp, Rynearson & Associates

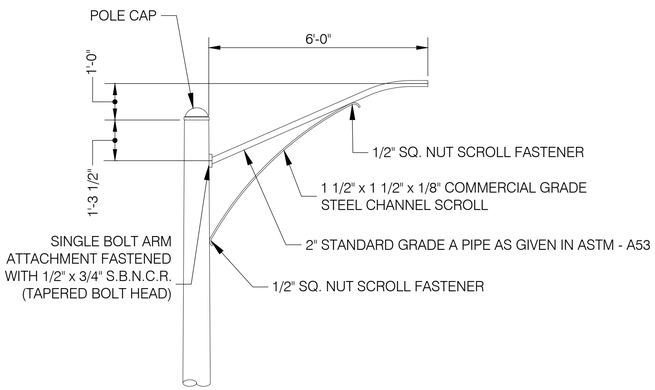

6'-0" LUMINAIRE ARM

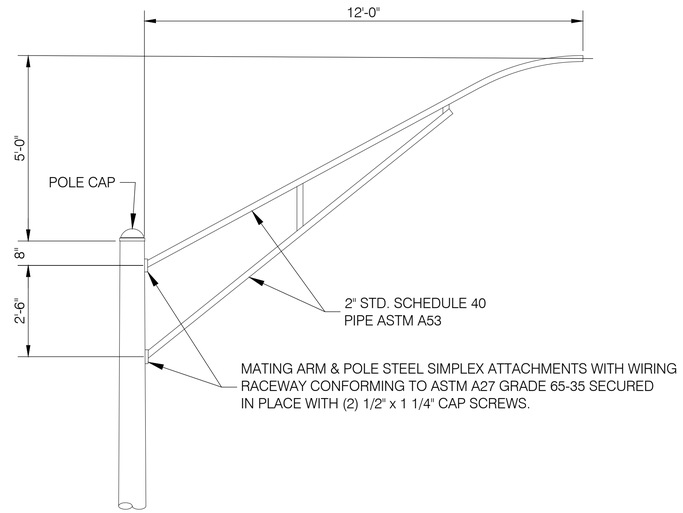

12'-0" LUMINAIRE ARM

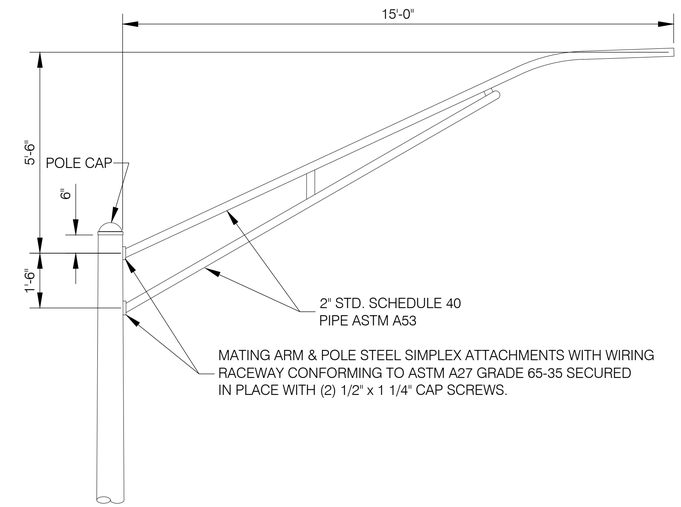

15'-0" LUMINAIRE ARM

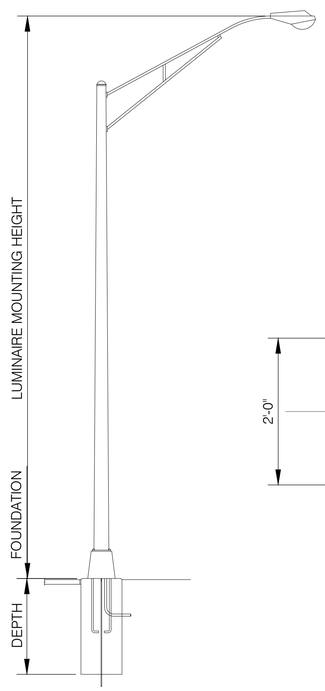

LIGHT POLE ELEVATION

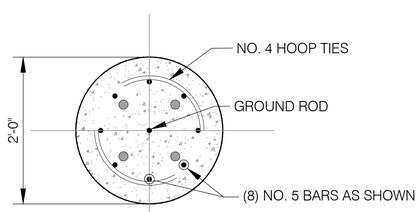

SECTION A - A

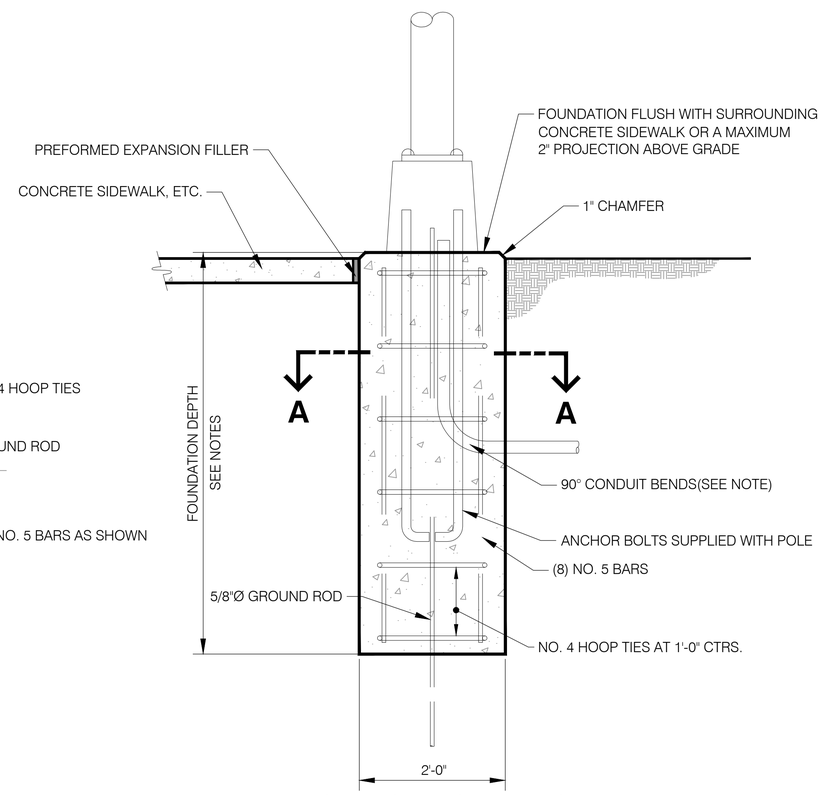

LIGHT POLE FOUNDATION

NOTES

1. POLE FOUNDATIONS SHALL CONFORM TO SECTION 900 OF THE STANDARD SPECIFICATIONS. FOUNDATIONS SHALL BE ROUND AND ONLY THE TOP TWO FEET MAY BE FORMED.

2. THE FOUNDATION DEPTH SHALL BE DETERMINED FROM THE FOLLOWING TABLE:

LUMINIARE HEIGHT	FOUNDATION DEPTH
25'-0"	4'-0"
30'-0"	5'-6"
40'-0"	7'-0"

3. CONDUIT BENDS SHALL BE 90°. THEY SHALL BE LOCATED 30 INCHES MINIMUM BELOW GROUND LEVEL. THERE SHALL BE A MINIMUM OF ONE SPARE CONDUIT BEND INSTALLED IN EACH FOUNDATION WITH BOTH ENDS PLUGGED AND FREE OF DEBRIS AND MOISTURE. STAND PIPE CONDUIT SHALL PROJECT 2 INCHES MINIMUM ABOVE TOP OF FINISHED FOUNDATION.

4. GROUND ROD SHALL BE PLACED PRIOR TO CONCRETE PLACEMENT. THE ROD SHALL PROJECT EIGHT INCHES MINIMUM ABOVE THE TOP OF THE FINISHED FOUNDATION AND EXTEND FIVE FEET MINIMUM BELOW THE BOTTOM OF THE FOUNDATION.

TRAFFIC ENGINEER

CITY ENGINEER

CITY OF OMAHA PUBLIC WORKS DEPARTMENT

STREET LIGHT POLE

STANDARD PLATE 900-50 SHEET 1/1

ISSUE DATE: ..... DECEMBER 10, 2013

L:\Engineering\01101\DOCUMENTS\Standard Plates\ACAD Files from City\REVISED PLATE NUMERS\PLT-900-50.dwg, 2/19/2014 10:21:45 AM, rdsk, 1:1.0377x, Lump, Rynerson & Associates

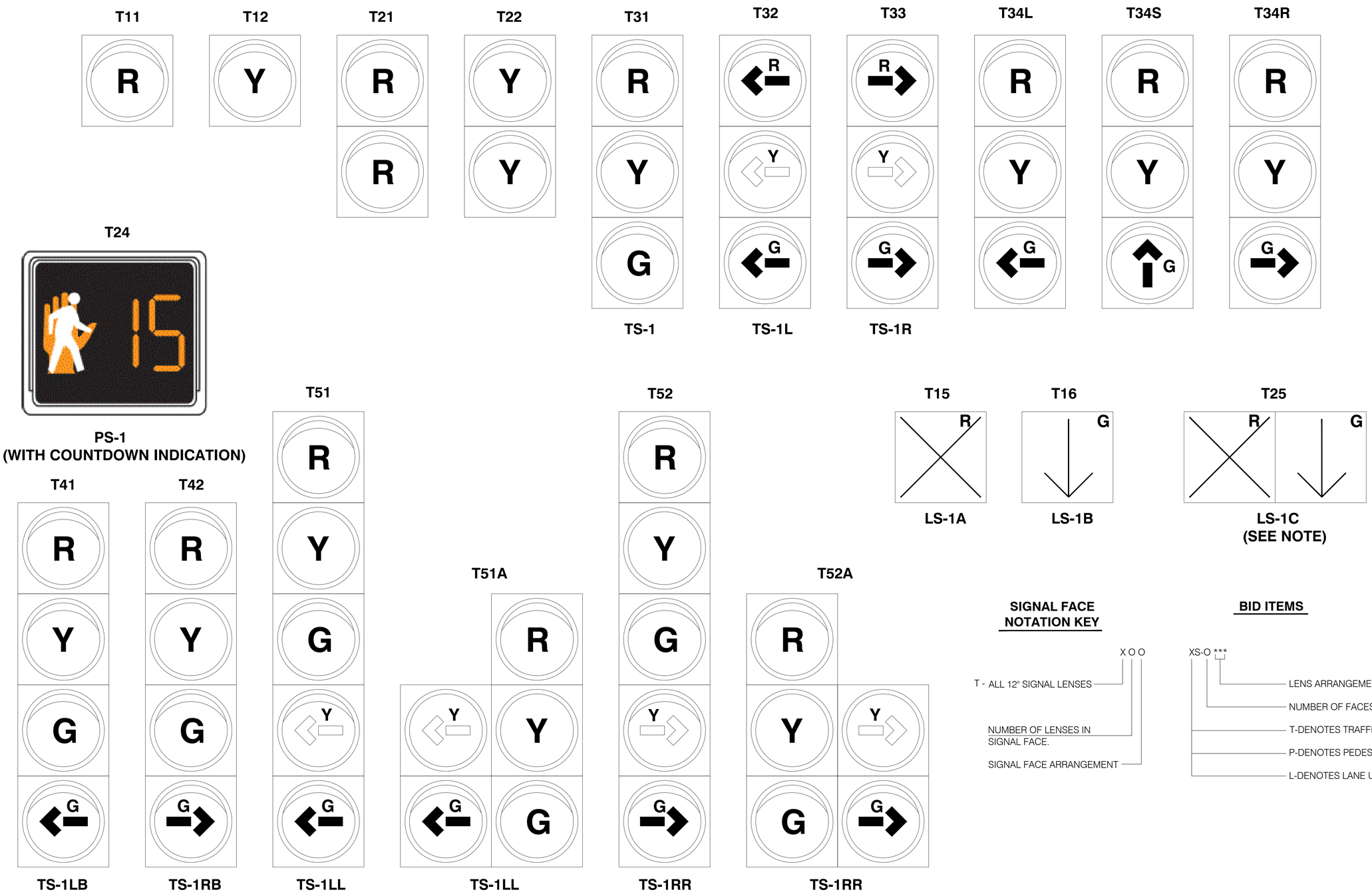

SIGNAL FACE NOTATION KEY

X O O

- T - ALL 12" SIGNAL LENSES
- NUMBER OF LENSES IN SIGNAL FACE.
- SIGNAL FACE ARRANGEMENT

BID ITEMS

XS-O ***

- LENS ARRANGEMENT
- NUMBER OF FACES
- T-DENOTES TRAFFIC SIGNAL
- P-DENOTES PEDESTRIAN SIGNAL
- L-DENOTES LANE USE CONTROL SIGNAL

NOTES

1. THE TWO SIGNAL INDICATIONS FOR SIGNAL TYPE LS-1C SHALL BE SUPERIMPOSED IN THE SAME LENSE.

TRAFFIC ENGINEER	CITY OF OMAHA PUBLIC WORKS DEPARTMENT	
CITY ENGINEER	STANDARD SIGNAL FACE ARRANGEMENTS	STANDARD PLATE 900-60 — SHEET 1/1
		ISSUE DATE: ..... DECEMBER 10, 2013

L:\Engineering\011010\DOCUMENTS\Standard Plates\ACAD Files from City\REVISED PLATE NUMBERS\PLT-900-60.dwg, 2/19/2014 10:23:51 AM, mckk, 1:1.03774, Lamp, Rynearson & Associates

EXISTING PAVEMENT INSTALLATION

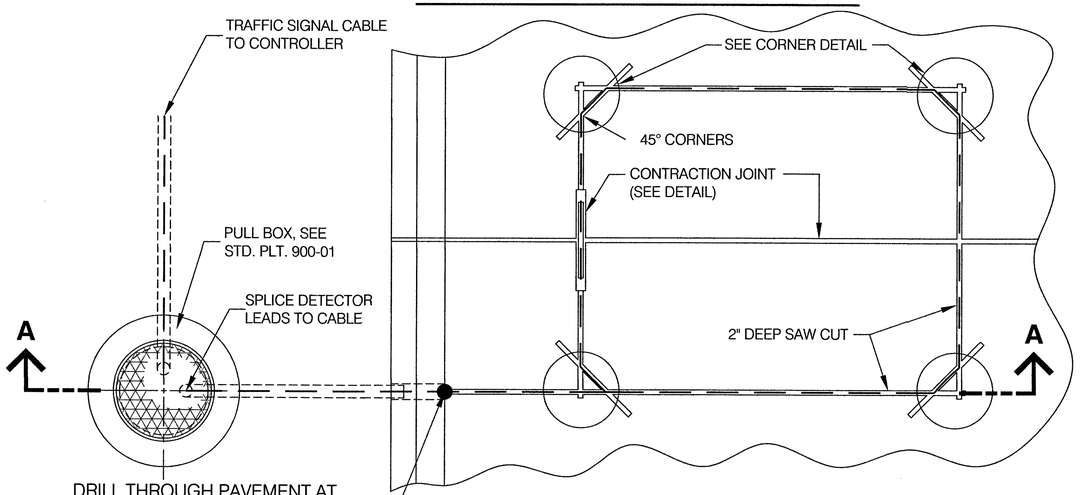

DRILL THROUGH PAVEMENT AT GUTTERLINE FOR DETECTOR LEAD PLACEMENT AS SHOWN. PLUG HOLE WITH DUCT SEALANT TO WITHIN 3/4" OF CONCRETE SURFACE BEFORE PLACEMENT OF CRACK FILLER. NO MORE THAN 2 LOOP TAILS IN A SINGLE CONDUIT

DETECTOR PLAN

NEW PAVEMENT INSTALLATION

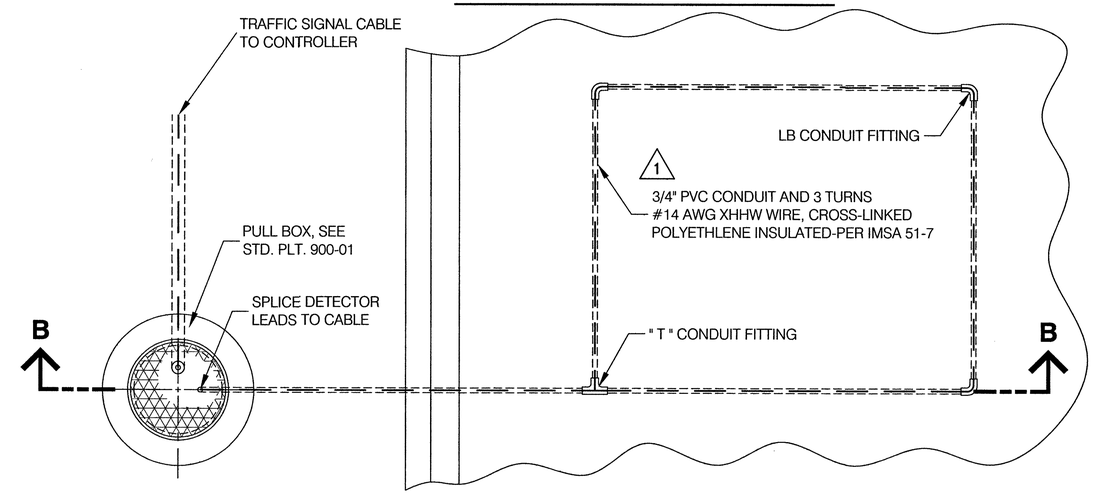

DETECTOR PLAN

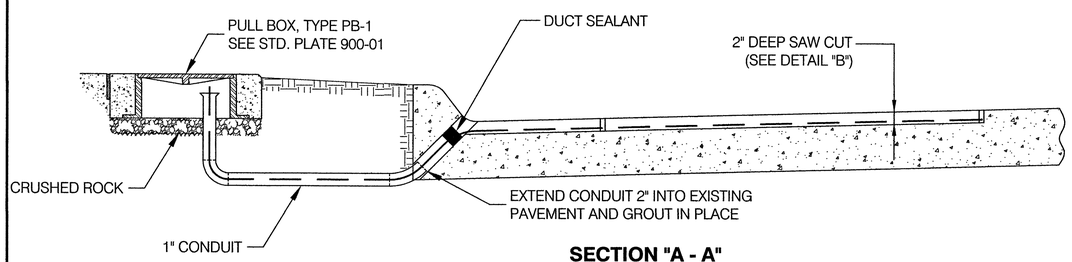

SECTION "A - A"

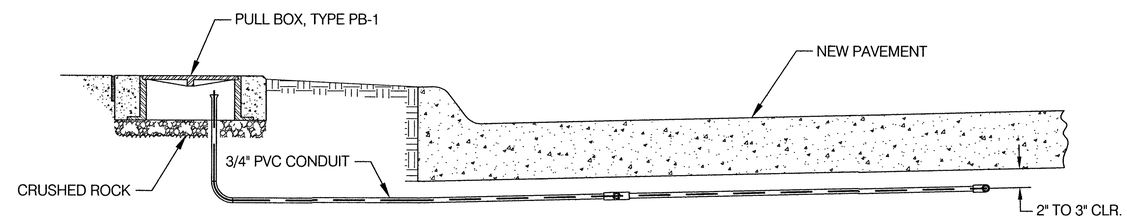

SECTION "B - B"

NOTES

1. CRACK FILLER SHALL BE 3M LOOP SEALANT OR EQUIVALENT.
2. FINISHED LOOP SHALL SHOW NO SHORTED TURNS, NO BROKEN WIRE AND 5MEG OHMS (MINIMUM) TO GROUND, MEASURED, WITH SIMPSON 260 VOLT OHMETER OR EQUIVALENT.
3. PVC CONDUIT SHALL BE SCHEDULE 40 PIPE. INSTALL COMPLETE LOOP (CONDUIT AND WIRE) JUST PRIOR TO CONCRETE PLACEMENT. USE EXTREME CARE DURING CONSTRUCTION TO ELIMINATE DAMAGE TO LOOP.
4. SAW CUT, WIRE PLACEMENT AND SEALING PRIOR TO OPENING TO TRAFFIC.

DETAILS AT CONTRACTION JOINT

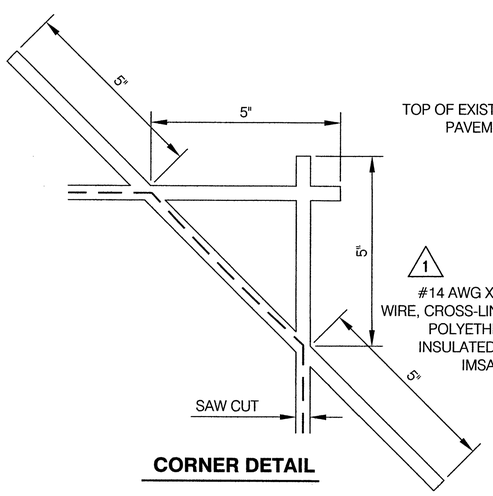

CORNER DETAIL

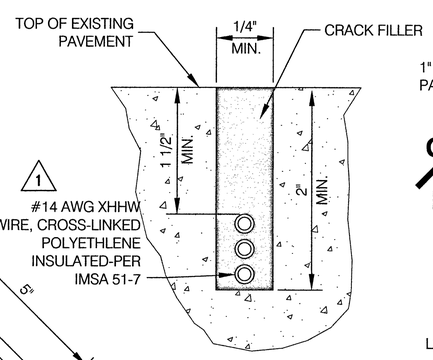

SAW CUT DETAIL

DETAIL B

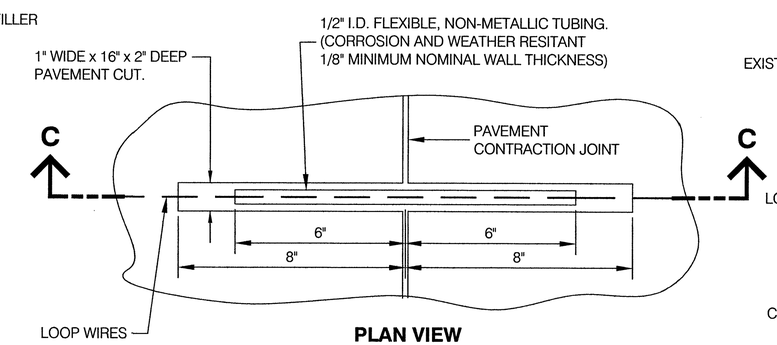

PLAN VIEW

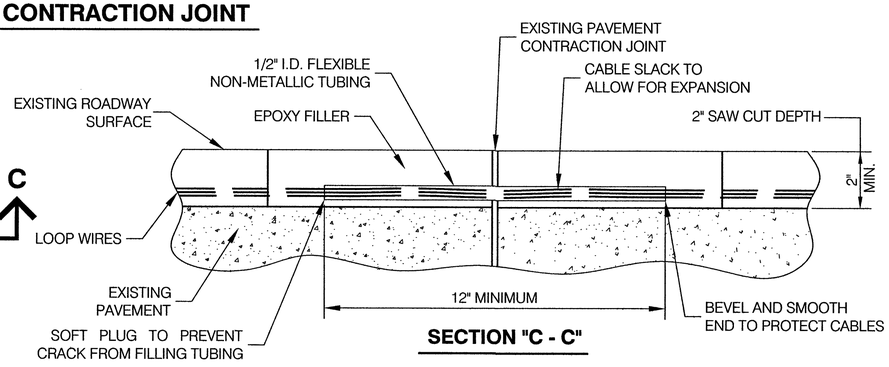

SECTION "C - C"

1	6/02/2015	Murthy Krishna TRAFFIC ENGINEER	CITY OF OMAHA — PUBLIC WORKS DEPARTMENT
	6/11/15	Todd Pfister CITY ENGINEER	INDUCTIVE LOOP DETECTORS — STANDARD PLATE 900-70 — SHEET 1/1 — ISSUE DATE: ..... DECEMBER 10, 2013

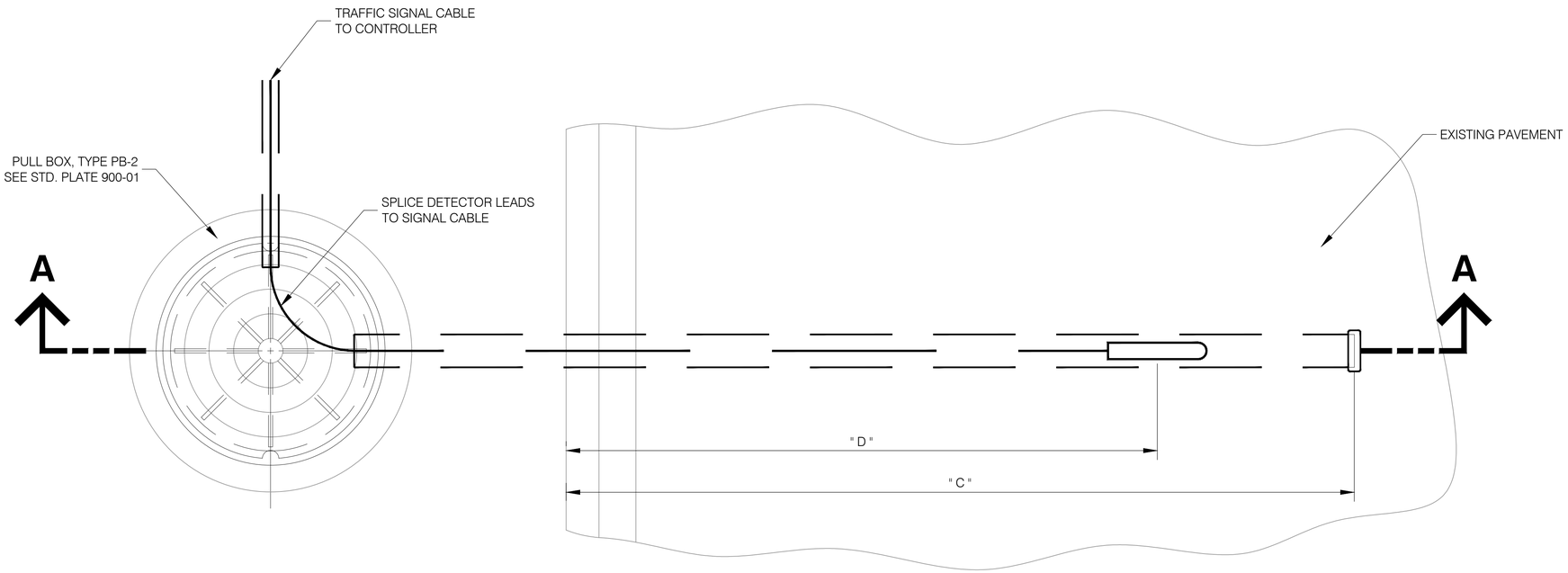

DETECTOR PLAN

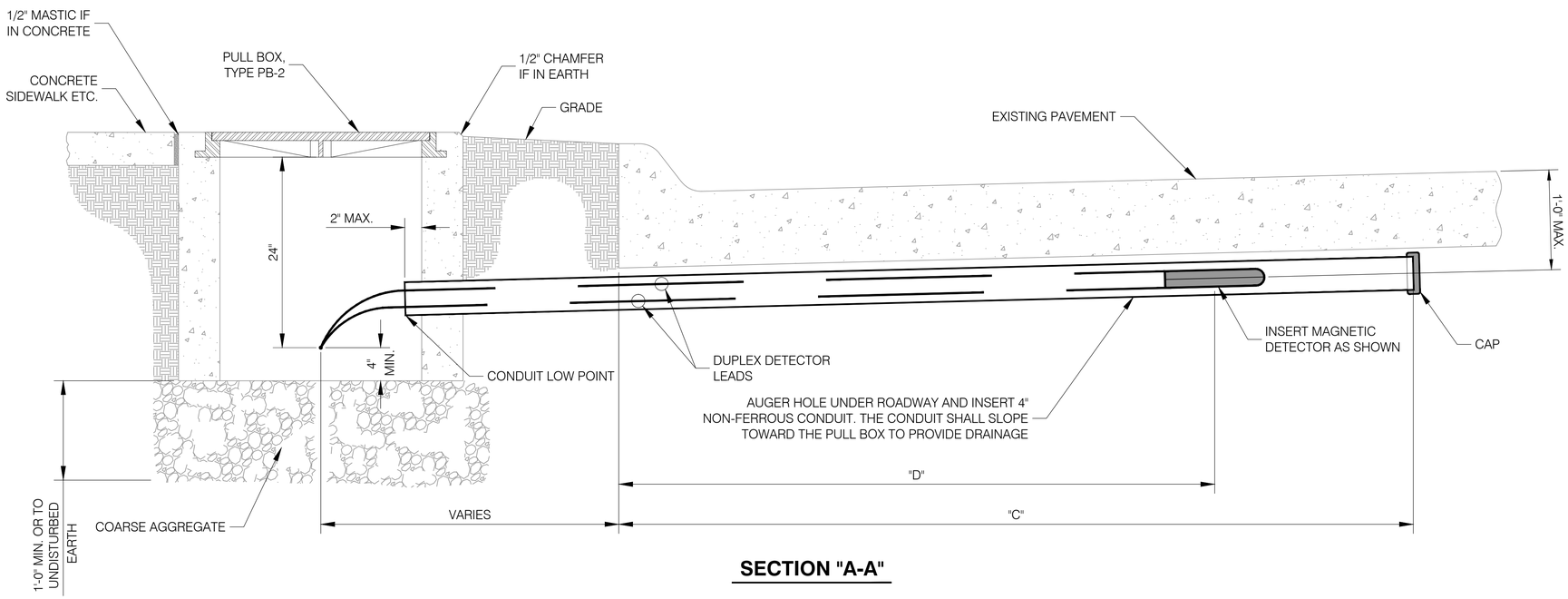

SECTION "A-A"

NOTES

1. DIMENSIONS "D" AND "C" SHALL BE AS SHOWN ON CONSTRUCTION PLANS.

	CITY OF OMAHA PUBLIC WORKS DEPARTMENT	
TRAFFIC ENGINEER	**MAGNETIC DETECTOR INSTALLATION**	STANDARD PLATE **900-72** SHEET 1/1
CITY ENGINEER		ISSUE DATE: ..... DECEMBER 10, 2013

L:\Engineering\011010\DOCUMENTS\Standard Plates\ACAD Files from City\REVISED PLATE NUMERS\PLT-900-72.dwg, 2/18/2014 10:50:51 AM, rick. 1:1.03774, Lamp, Rynearson & Associates

TWO-PHASE INSTALLATIONS

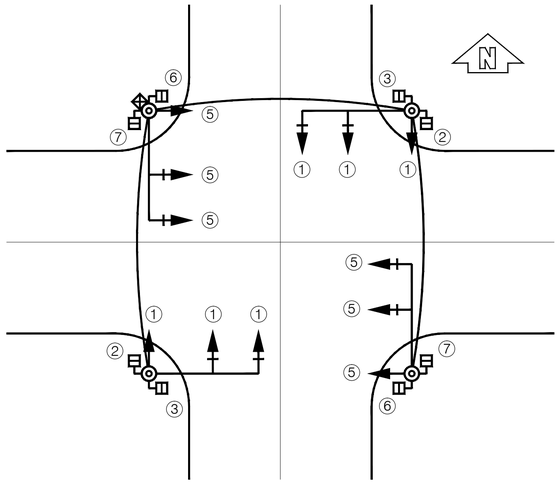

MAST ARM POLES ON THE NE & SW CORNERS

WIRE COLOR	TRACER	SIGNAL NO.	FUNCTION
GREEN		1	GREEN
ORANGE		1	YELLOW
RED		1	RED
GREEN	BLACK		SPARE
ORANGE	BLACK		SPARE
RED	BLACK		SPARE
GREEN	WHITE	2	N.S. WALK
RED	WHITE	2	N.S. DON'T WALK
BLUE	WHITE	3	E.W. WALK
BLACK	WHITE	3	E.W. DON'T WALK
BLUE			SPARE
WHITE	BLACK		SPARE
BLACK			SPARE
BLUE	BLACK		SPARE
BLACK	RED		COMMON WHITE TAG
WHITE			COMMON

MAST ARM POLES ON THE NW & SE CORNERS

WIRE COLOR	TRACER	SIGNAL NO.	FUNCTION
GREEN			SPARE
ORANGE			SPARE
RED			SPARE
GREEN	BLACK		SPARE
ORANGE	BLACK		SPARE
RED	BLACK		SPARE
GREEN	WHITE	7	N.S. WALK
RED	WHITE	7	N.S. DON'T WALK
BLUE	WHITE	6	E.W. WALK
BLACK	WHITE	6	E.W. DON'T WALK
BLUE		5	GREEN
WHITE	BLACK	5	YELLOW
BLACK		5	RED
BLUE	BLACK		SPARE
BLACK	RED		COMMON WHITE TAG
WHITE			COMMON

COMM CABLE

WIRE COLOR	FUNCTION
RED	TRANSMIT
BLUE	TRANSMIT
GREEN	RECEIVE
WHITE	RECEIVE
ORANGE	SPARES
WHITE	SPARES
GREY	SPARES
WHITE	SPARES
BLUE	SPARES
WHITE	SPARES
BROWN	SPARES
WHITE	SPARES

3 TO 8 PHASE INSTALLATIONS

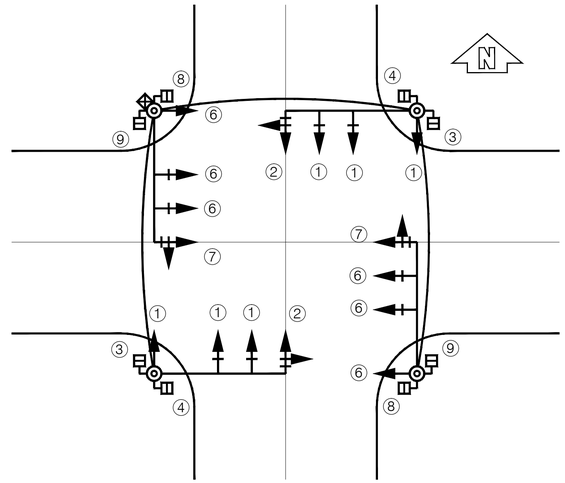

MAST ARM POLES ON THE NE & SW CORNERS

WIRE COLOR	TRACER	SIGNAL NO.	FUNCTION
GREEN		1 & 2	GREEN
ORANGE		1 & 2	YELLOW
RED		1 & 2	RED
GREEN	BLACK	2	GREEN ARROW
ORANGE	BLACK	2	YELLOW ARROW
RED	BLACK	2	RED ARROW
GREEN	WHITE	3	WALK
RED	WHITE	3	DON'T WALK
BLUE	WHITE	4	WALK
BLACK	WHITE	4	DON'T WALK
BLUE			SPARE
WHITE	BLACK		SPARE
BLACK			SPARE
BLUE	BLACK		SPARE
BLACK	RED		COMMON WHITE TAG
WHITE			COMMON

MAST ARM POLES ON THE NW & SE CORNERS

WIRE COLOR	TRACER	SIGNAL NO.	FUNCTION
GREEN			SPARE
ORANGE			SPARE
RED			SPARE
GREEN	BLACK	7	GREEN ARROW
ORANGE	BLACK	7	YELLOW ARROW
RED	BLACK	7	RED ARROW
GREEN	WHITE	9	WALK
RED	WHITE	9	DON'T WALK
BLUE	WHITE	8	WALK
BLACK	WHITE	8	DON'T WALK
BLUE		6 & 7	GREEN
WHITE	BLACK	6 & 7	YELLOW
BLACK		6 & 7	RED
BLUE	BLACK		SPARE
BLACK	RED		COMMON WHITE TAG
WHITE			COMMON

COMM CABLE

WIRE COLOR	FUNCTION
RED	TRANSMIT
BLUE	TRANSMIT
GREEN	RECEIVE
WHITE	RECEIVE
ORANGE	SPARES
WHITE	SPARES
GREY	SPARES
WHITE	SPARES
BLUE	SPARES
WHITE	SPARES
BROWN	SPARES
WHITE	SPARES

PEDESTRIAN ACTUATED INSTALLATIONS

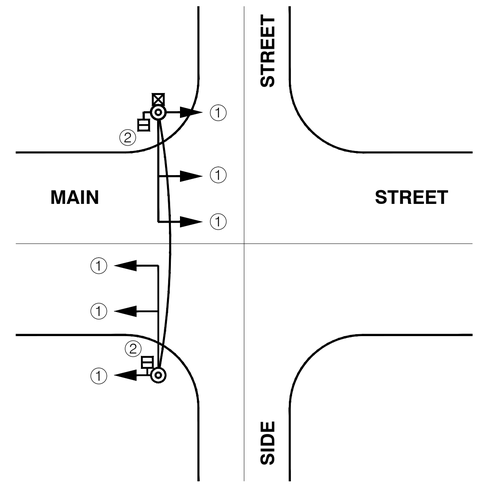

NORTH-SOUTH MAIN STREET

WIRE COLOR	TRACER	SIGNAL NO.	FUNCTION
GREEN		1	GREEN
ORANGE		1	YELLOW
RED		1	RED
GREEN	BLACK		SPARE
ORANGE	BLACK		SPARE
RED	BLACK		SPARE
BLACK	WHITE		SPARE
BLUE		2	E.W. WALK
WHITE	BLACK		COMMON WHITE TAG
BLACK		2	E.W. DON'T WALK
BLUE	BLACK		SPARE
WHITE			COMMON

EAST-WEST MAIN STREET

WIRE COLOR	TRACER	SIGNAL NO.	FUNCTION
GREEN		2	N.S. WALK
ORANGE			SPARE
RED		2	N.S. DON'T WALK
GREEN	BLACK		SPARE
ORANGE	BLACK		SPARE
RED	BLACK		SPARE
BLACK	WHITE		COMMON WHITE TAG
BLUE		1	GREEN
WHITE	BLACK	1	YELLOW
BLACK		1	RED
BLUE	BLACK		SPARE
WHITE			COMMON

NOTES

1. EACH CABLE SHALL BE IDENTIFIED BY MEANS OF METAL TAGS WHERE IT COMES INTO THE CONTROLLER CABINET OR CONTROLLER "T" BASE. THE IDENTIFICATION SHALL DENOTE THE FINAL DESTINATION OF EACH CABLE. (F.E. N.E., S.W., N.C. ISLAND, S.C. ISLAND).

2. NO BREAKS OR SPLICES SHALL BE MADE BETWEEN THE CONTROLLER CABINET AND THE CABLES FINAL DESTINATION, UNLESS APPROVED BY THE ENGINEER. WHERE POSSIBLE, SPLICES SHALL BE IN POLE BASES RATHER THAN PULL-BOXES.

3. AT EACH POLE, A SEPARATE 5-CONDUCTOR CABLE SHALL BE INSTALLED FROM EACH TWO OR THREE-SECTION SIGNAL HEAD ASSEMBLY TO THE SIGNAL POLE BASE. A 7 - CONDUCTOR CABLE SHALL BE INSTALLED FROM A FIVE-SECTION SIGNAL HEAD ASSEMBLY TO THE SIGNAL POLE BASE. A-7 CONDUCTOR CABLE SHALL BE USED FOR ANY SIGNAL HEAD CORRESPONDING TO A LEFT TURN LANE, REGUARDLESS OF THE NUMBER OF SIGNAL INDICATIONS.

4. FIVE-SECTION SIGNAL HEAD ASSEMBLIES WITH A THREE-SECTION ROW AND TWO-SECTION ROW SHALL HAVE A 7-CONDUCTOR WIRE RAN TO THE THREE SECTION ROW AND A 3-CONDUCTOR CABLE WITH A JACKET JUMPED TO THE TWO SECTION ROW.

	CITY OF OMAHA PUBLIC WORKS DEPARTMENT		
TRAFFIC ENGINEER	STANDARD TRAFFIC SIGNAL WIRING CODES	STANDARD PLATE 900-74	SHEET 1/1
CITY ENGINEER		ISSUE DATE: ..... DECEMBER 10, 2013	

L:\Engineering\011\102\DOCUMENTS\Standard Plates\ACAD Files from City\REVISED PLATE NUMERS\PLT-900-74.dwg, 2/19/2014 10:53:12 AM, rickk, 1:1.03774, Lamp, Rynearson & Associates

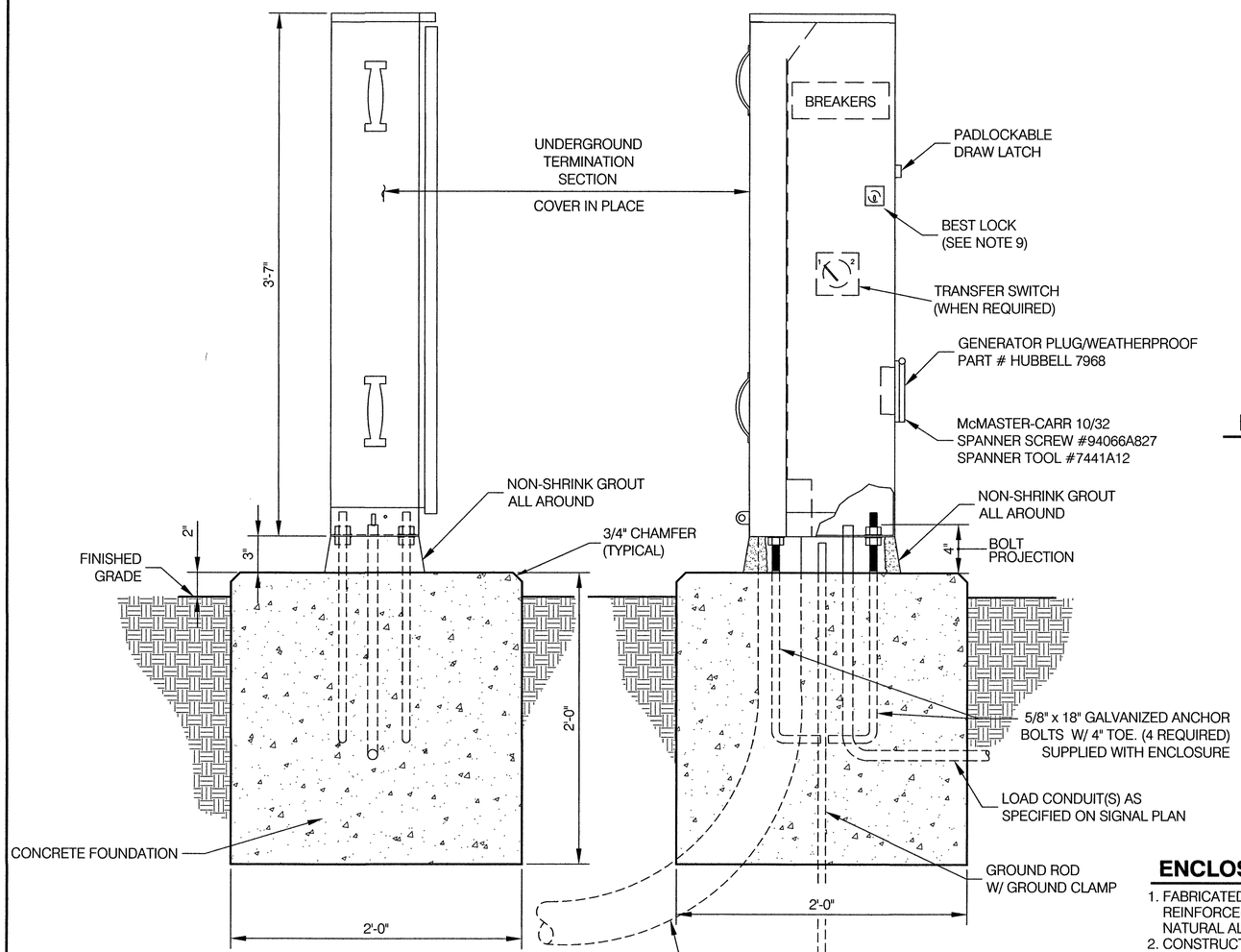

LEFT SIDE

COVERS IN PLACE
MOUNTED ON PAD

FRONT VIEW

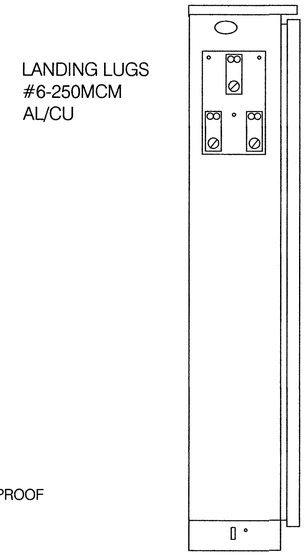

RIGHT SIDE INTERIOR VIEW

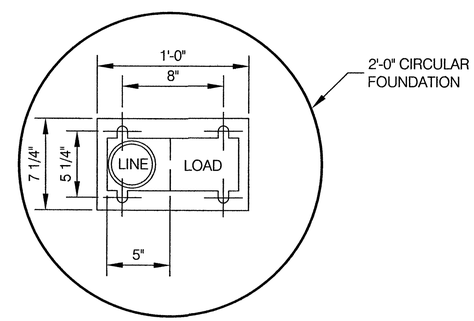

BASE PLAN

SCALE: NONE

ENCLOSURE CONSTRUCTION NOTES

1. FABRICATED FROM 1/8" ALUMINUM, ELECTRICALLY WELDED AND REINFORCED WHERE REQUIRED. THE CABINET SHALL BE UNPAINTED NATURAL ALUMINUM.
2. CONSTRUCTION WILL BE NEMA 3R RAINTIGHT.
3. ALL NUTS, BOLTS, SCREWS, AND HINGES, WILL BE STAINLESS STEEL.
4. NUTS, BOLTS, AND SCREWS WILL NOT BE VISIBLE FROM OUTSIDE OF ENCLOSURE.
5. PHENOLIC NAMEPLATES WILL BE PROVIDED AS REQUIRED.
6. CONTROL WIRING WILL BE MARKED AT BOTH ENDS BY PERMANENT WIRE MARKERS.
7. A PLASTIC COVERED WIRING DIAGRAM WILL BE ATTACHED TO THE INSIDE OF THE FRONT DOOR.
8. ENCLOSURE WILL BE FACTORY WIRED AND CONFORM TO REQUIRED NEMA STANDARDS.
9. LOCK TO MATCH CURRENT CITY COMBINATION
10. SERVICE ENCLOSURE SHALL BE TESCO CLASS 26-100-UM-A2 OR CITY APPROVED EQUAL PRIOR TO BID.
11. CONCRETE FOR FOUNDATION SHALL BE L65.
12. ENCLOSURE SHALL BE SET PLUMB AND LEVEL

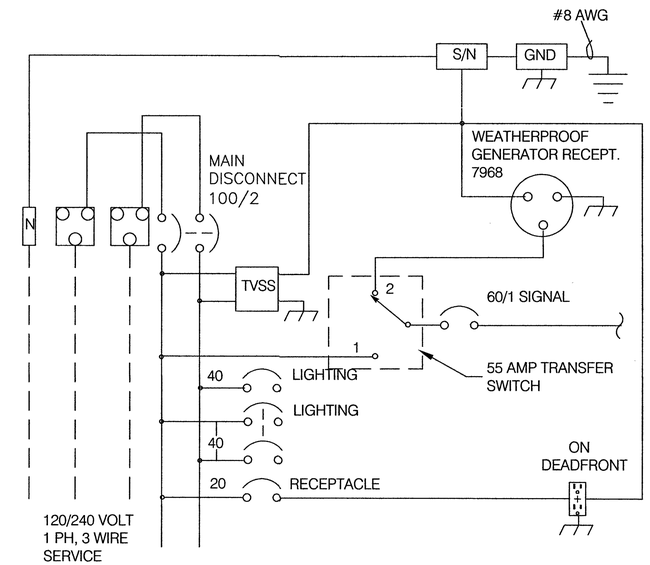

WIRING DIAGRAM WITH TRANSFER SWITCH

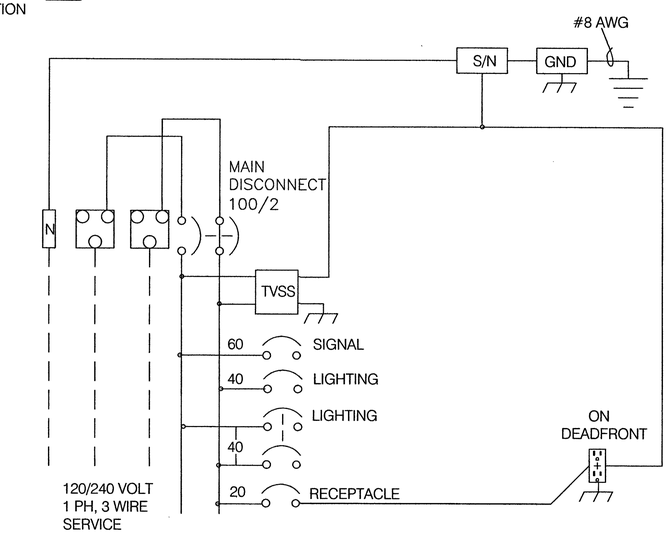

WIRING DIAGRAM WITHOUT TRANSFER SWITCH

1	6/02/2015	Murray Kost TRAFFIC ENGINEER	CITY OF OMAHA PUBLIC WORKS DEPARTMENT	
	6/11/15	Rocky Pfeifer CITY ENGINEER	ELECTRIC SERVICE PEDESTAL	STANDARD PLATE 900-76 / SHEET 1/1
				ISSUE DATE: ..... DECEMBER 10, 2013

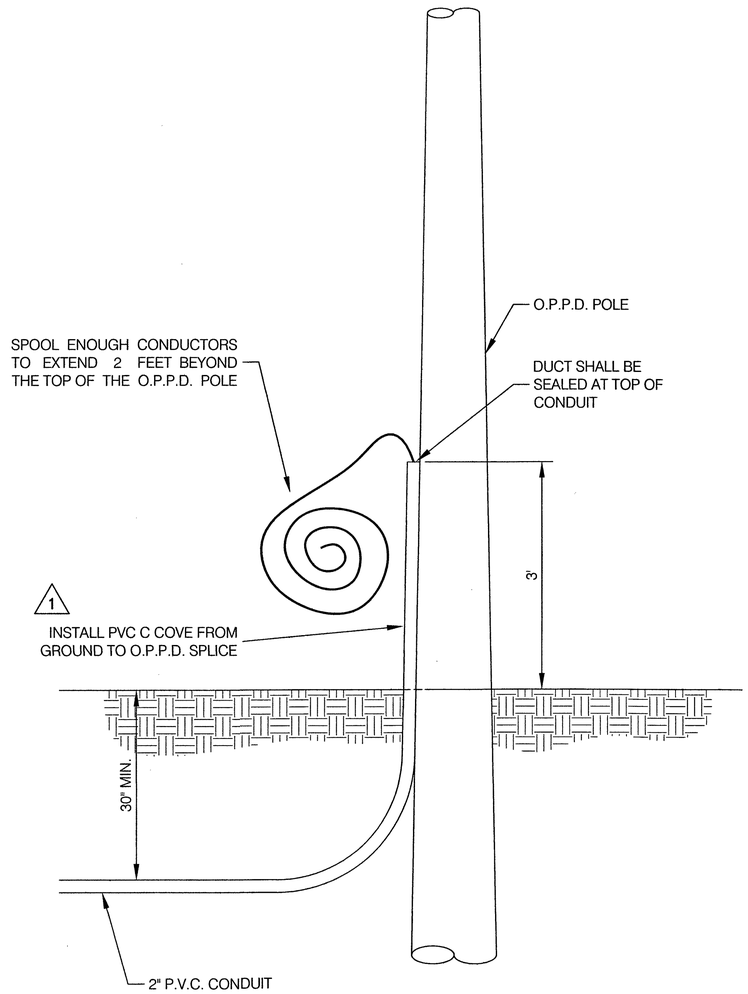

UNDERGROUND POWER SERVICE

NOTES

1. SERVICE RISER LOCATIONS SHALL BE AS SHOWN ON CONSTRUCTION PLANS.
2. O.P.P.D. SHALL INSTALL MOLDING ON WOOD POLE TO COVER SERVICE CONDUCTORS. WORK SHALL BE COORDINATED WITH O.P.P.D.

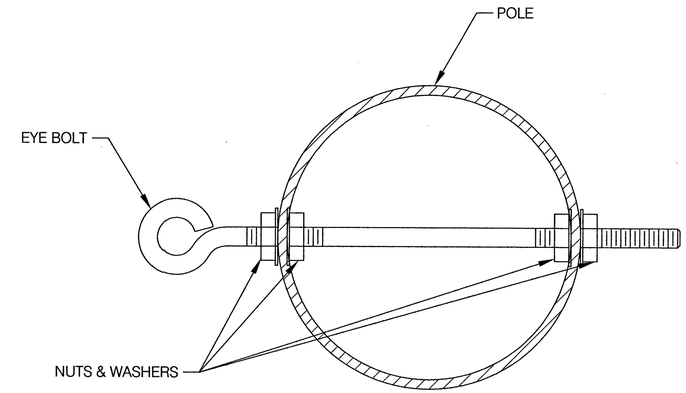

EYEBOLT CONNECTION DETAIL

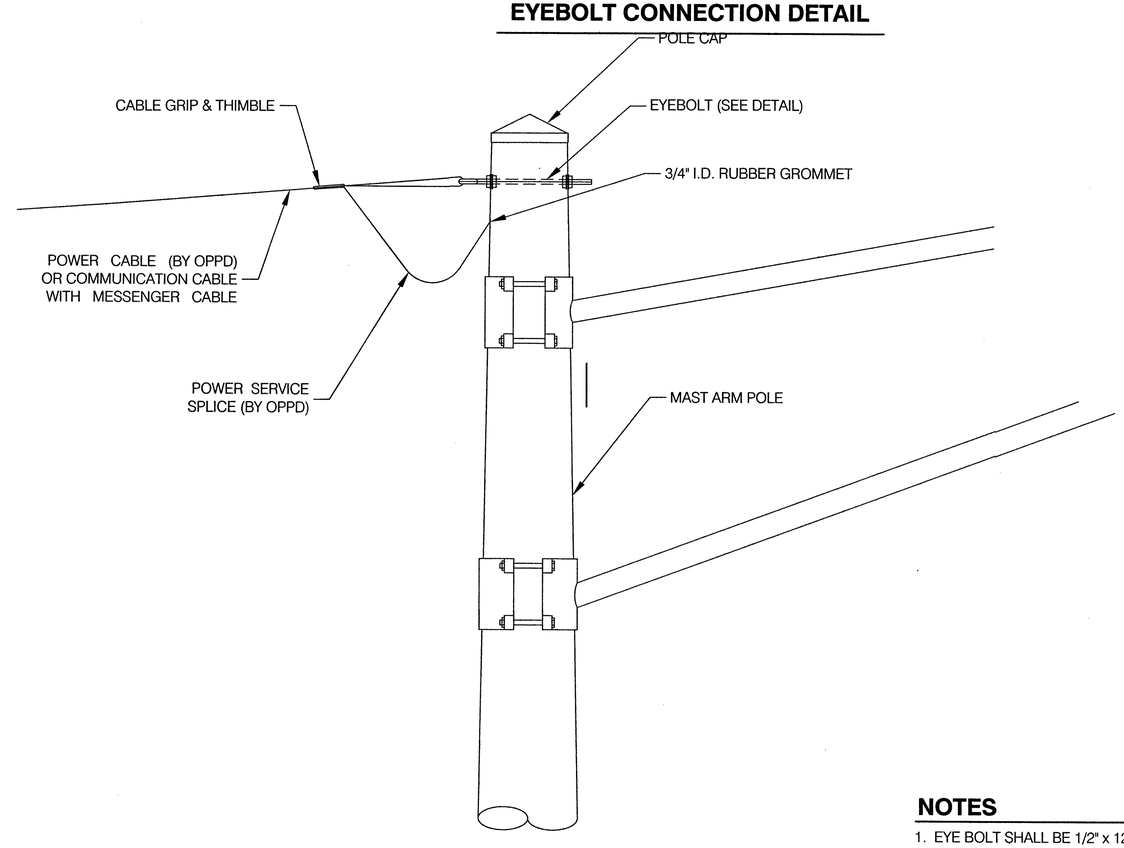

OVERHEAD POWER SERVICE/COMMUNICATIONS CABLE

NOTES

1. EYE BOLT SHALL BE 1/2" x 12" GALVANIZED AND CONFORM TO ASTM-A-307.
2. NUTS & WASHERS SHALL BE GALVANIZED.
3. EYE BOLT SHALL FACE POWER SOURCE.
4. TOLERANCE BETWEEN BOLT AND BOLTHOLE SHALL NOT EXCEED .0625".

1	6/02/2015	Murthy Krishna TRAFFIC ENGINEER	CITY OF OMAHA PUBLIC WORKS DEPARTMENT	
	6/11/15	Donald Pfeifer CITY ENGINEER	POWER SERVICE	STANDARD PLATE 900-78 SHEET 1/1 ISSUE DATE: ..... DECEMBER 10, 2013

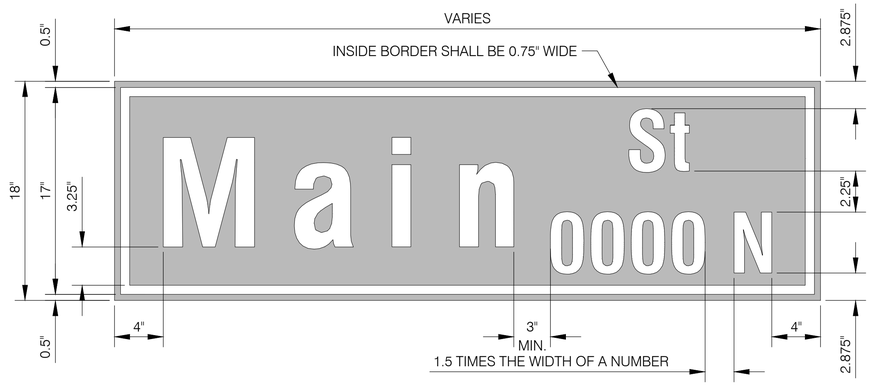

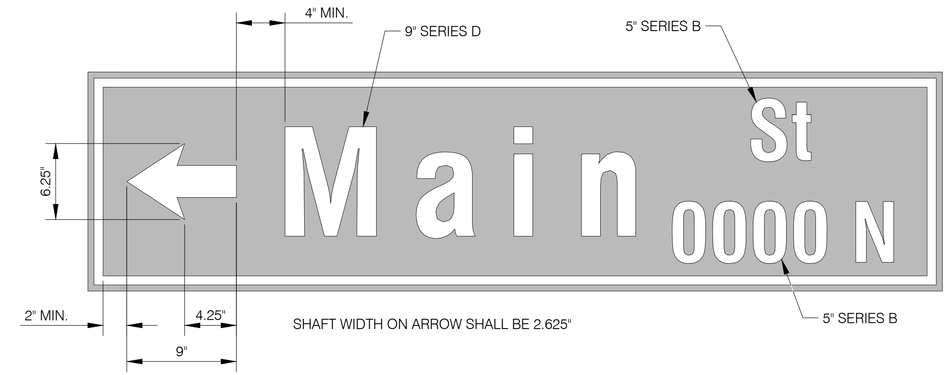

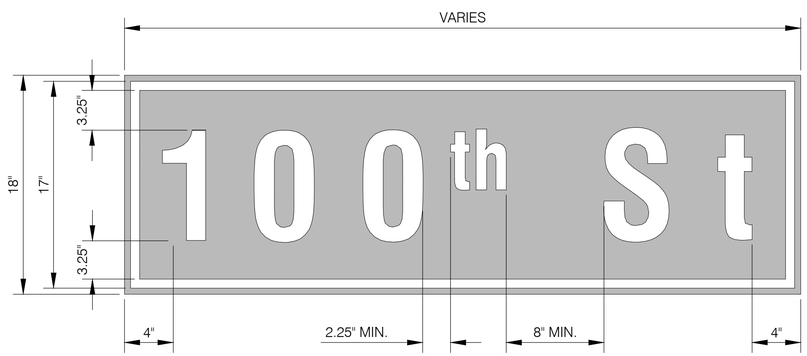

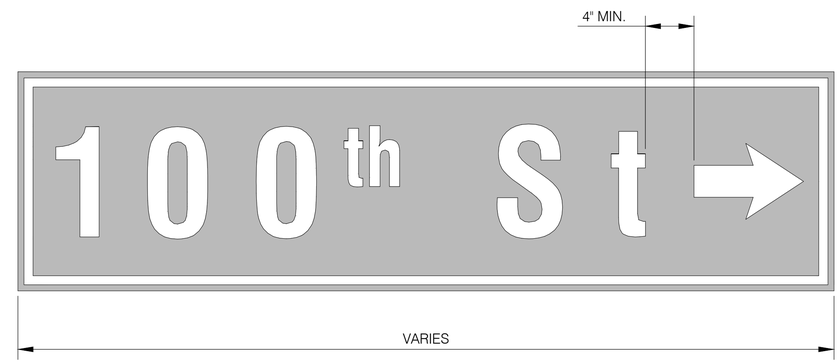

NOTES

1. STREET NAME SIGNS SHALL BE FABRICATED OF VIP DIAMOND GRADE REFLECTIVE SHEETING, SINGLE FACED ON 0.125 INCH THICKNESS, 6061-T6 OR 5052-H38 ALUMINUM SIGN BLANKS (FROM STRETCHER LEVEL FLAT SHEETING) FOR MAST ARM MOUNTING.
2. ACCEPTABLE LENGTHS VARY FROM 3 FEET TO 7 FEET IN 6 INCH INCREMENTS.
3. COLORS USED FOR THE THE STREET NAME SIGNS SHALL BE WHITE (SILVER) TEXT ON GREEN BACKGROUND.
4. THE SIZES AND SPACING OF UPPER AND LOWER CASE LETTERS ARE SPECIFIED IN THE "STANDARD ALPHABETS FOR HIGHWAY SIGNS", FEDERAL HIGHWAY ADMINISTRATION, 1966 EDITION, REPRINTED APRIL, 1984.
5. SIGN FACES MAY BE FABRICATED USING EITHER EC FILM, CUT OUT LETTERS OR REVERSE SCREENED.

	CITY OF OMAHA PUBLIC WORKS DEPARTMENT		
TRAFFIC ENGINEER	**STREET NAME SIGN LAYOUTS**	**STANDARD PLATE**	**900-80**	SHEET 1/2
	TYPE " A ", MAST ARM MOUNTED 18" SIGN HEIGHT	ISSUE DATE: ..... DECEMBER 10, 2013	
CITY ENGINEER			

L:\Engineering\011010\2\DOCUMENTS\Standard Plates\ACAD Files from City\REVISED PLATE NUMERS\PLT-900-80 (1).dwg, 2/19/2014 11:02:00 AM, rdik, 1:1.03774, Lump, Rynearson & Associates

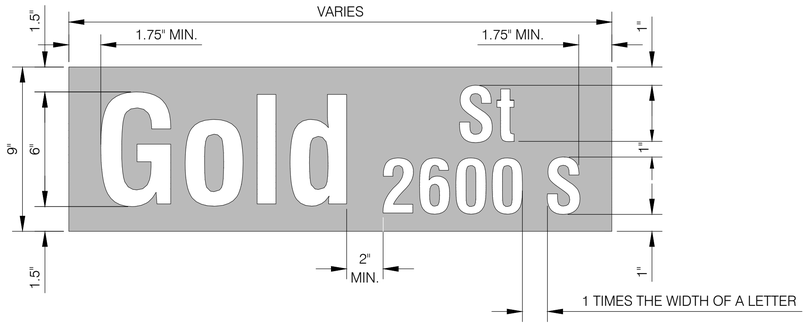

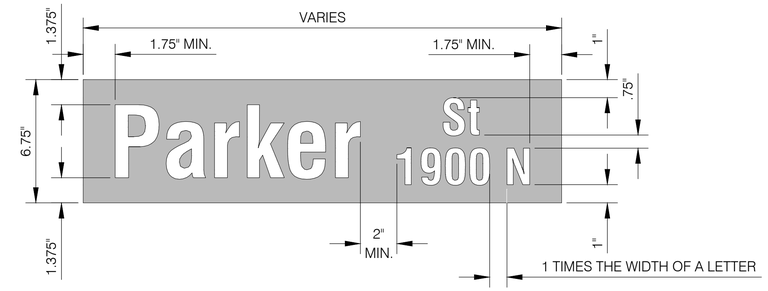

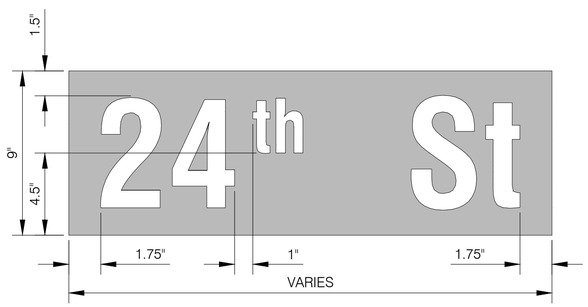

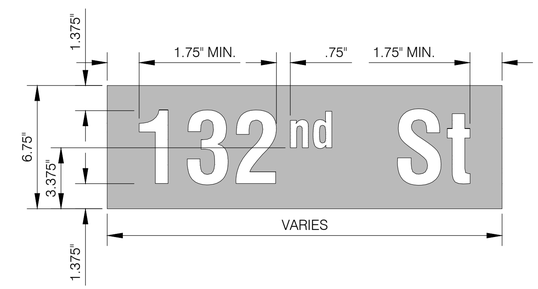

TYPE " B ", SIDE STREET
9" SIGN HEIGHT
3" AND 6" LETTERS SERIES B

TYPE " C ", SIDE STREET
6 3/4" SIGN HEIGHT
2" AND 4" LETTERS SERIES B

NOTES

1. TYPE " B " STREET NAME SIGNS SHALL BE FABRICATED OF VIP DIAMOND GRADE REFLECTIVE SHEETING, DOUBLE FACED ON 0.10 INCH THICK, 6063-T6 OR 5052-H38 (ALUMINUM ALLOY) EXTRUDED (0.25") SIGN BLANKS. EXTRUDED ALUMINUM SIGN BLANKS SHALL BE USED FOR STREET NAME SIGN BLANKS LONGER THAN 36 INCHES.
   ACCEPTABLE LENGTHS FOR TYPE " B " SIGNS ARE 24", 30", 36", 42" AND 48".

2. TYPE " C " STREET NAME SIGNS SHALL BE FABRICATED OF HIGH INTENSITY GRADE / SUPER ENGINEERING GRADE REFLECTIVE SHEETING, DOUBLE FACED ON 0.10 INCH THICK, 6061-T6 OR 5052-H38 ALUMINUM SIGN BLANKS. (ALUMINUM FROM STRETCHER LEVEL FLAT SHEETING)
   ACCEPTABLE LENGTHS FOR TYPE " C " SIGNS ARE 24", 30" AND 36".

3. COLORS USED FOR ALL STREET NAME SIGNS SHALL BE WHITE (SILVER) TEXT ON GREEN BACKGROUND.

4. THE SIZES AND SPACING OF UPPER AND LOWER CASE LETTERS ARE SPECIFIED IN THE "STANDARD ALPHABETS FOR HIGHWAY SIGNS", FEDERAL HIGHWAY ADMINISTRATION, 1966 EDITION, REPRINTED APRIL, 1984.

5. SIGN FACES MAY BE FABRICATED USING EITHER EC FILM, CUT OUT LETTERS OR REVERSE SCREENED.

TRAFFIC ENGINEER	CITY OF OMAHA PUBLIC WORKS DEPARTMENT	
	STREET NAME SIGN LAYOUTS TYPES " B " AND " C " SIDE STREETS	**STANDARD PLATE 900-80** SHEET 2/2
CITY ENGINEER		ISSUE DATE: ..... DECEMBER 10, 2013

L:\Engineering\011010\DOCUMENTS\Standard Plates\ACAD Files from City\REVISED PLATE NUMERS\PLT-900-80 (2).dwg, 2/19/2014 11:09:38 AM, rcbk, 1:1.03774, Lamp, Ryneerson & Associates

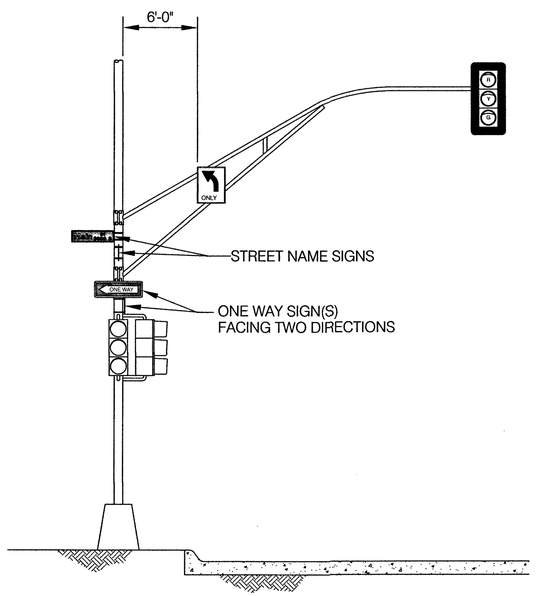

STREET NAME SIGN ON MAST ARM POLE

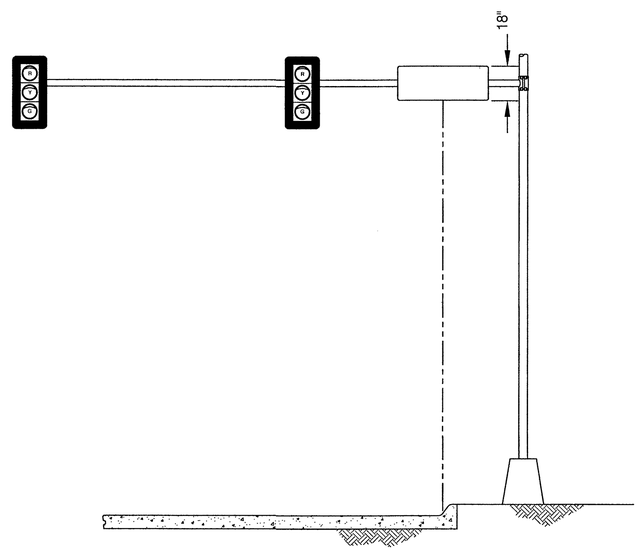

STREET NAME SIGN ON MAST ARM

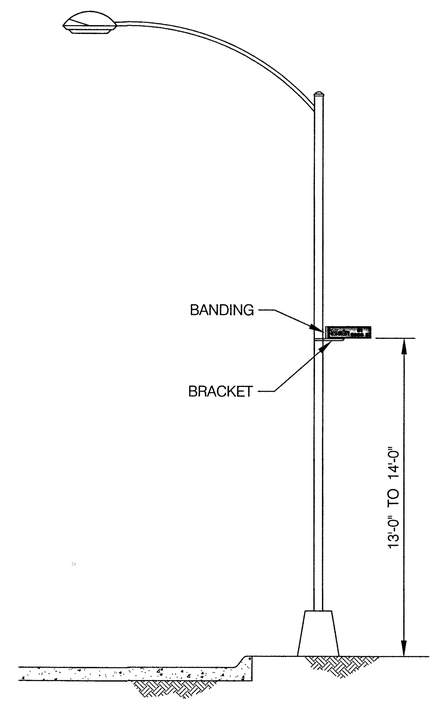

STREET NAME SIGN ON POLE

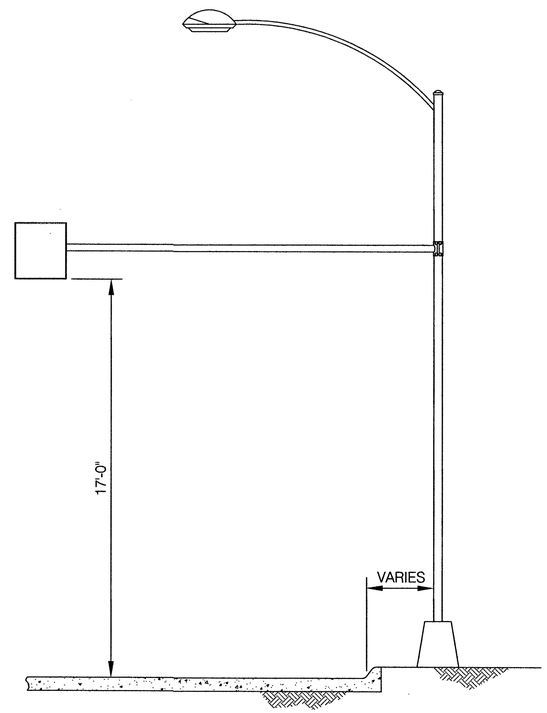

CANTILEVER SIGN STRUCTURE

NOTES

1. TYPE " B ", 9" HIGH STREET NAME SIGNS SHALL BE MOUNTED TO THE UPRIGHT WITH A NO. 8 METRO WING BRACKET AS MANUFACTURED BY "HALL SIGNS" OR PRE-APPROVED EQUAL.
2. (1) MAST ARM SIGNS SHALL BE MOUNTED WITH AN ASTRO BRACKET AND 3/4" BANDING OR CABLING. OVERHEAD MOUNTING HARDWARE SHALL BE UNIFORM THROUGHOUT THE INTERSECTION.
3. TYPE "A", 18" HIGH STREET NAME SIGNS SHALL BE MOUNTED TO WOOD POLE SPAN WIRES WITH "Z" BRACKETS OR ASTRO BRACKETS.

1	6/02/2015	TRAFFIC ENGINEER	CITY OF OMAHA PUBLIC WORKS DEPARTMENT	
	6/11/15	CITY ENGINEER	**OVERHEAD MOUNTED SIGNS**	STANDARD PLATE **900-82** SHEET 1/1
				ISSUE DATE: ..... DECEMBER 10, 2013

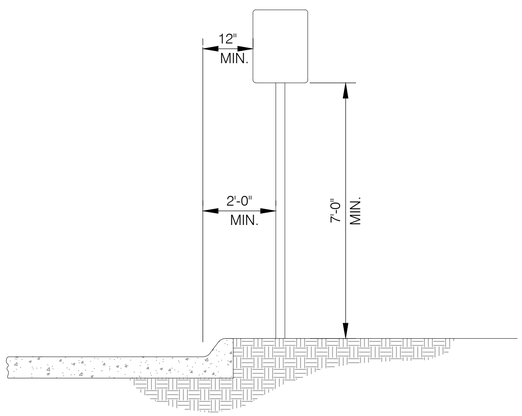

ROADSIDE SIGN ON POST

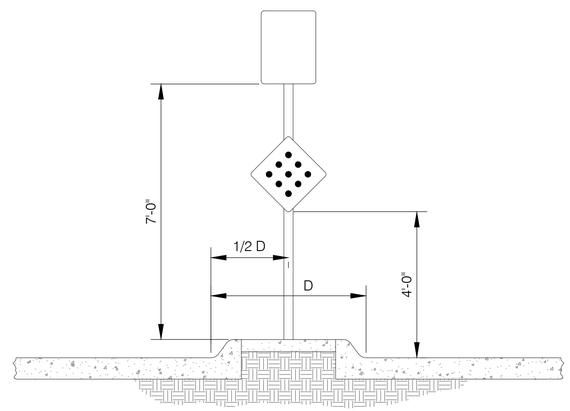

SIGN ON ISLAND IN LINE OF TRAFFIC

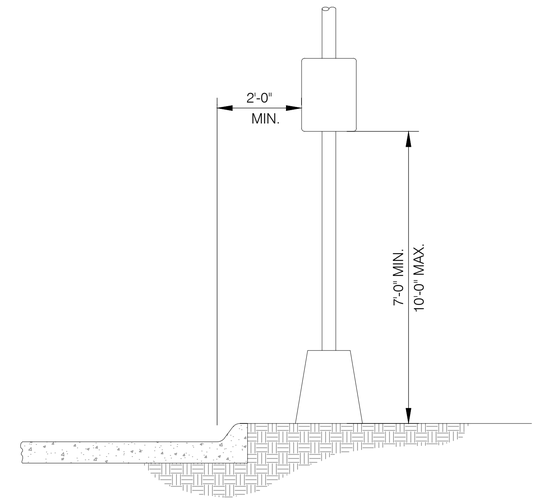

ROADSIDE SIGN ON POLE

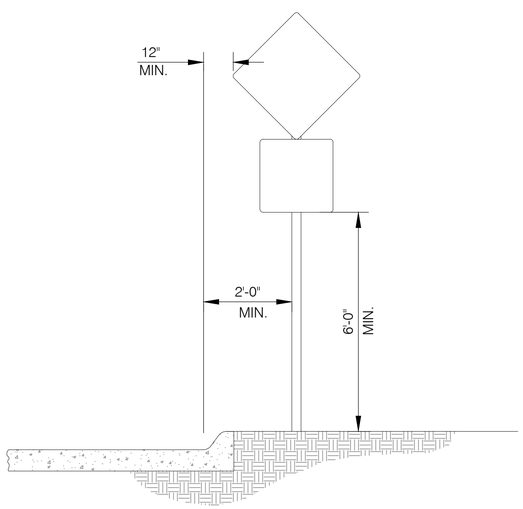

ROADSIDE SIGN ON POST WITH SECONDARY SIGN

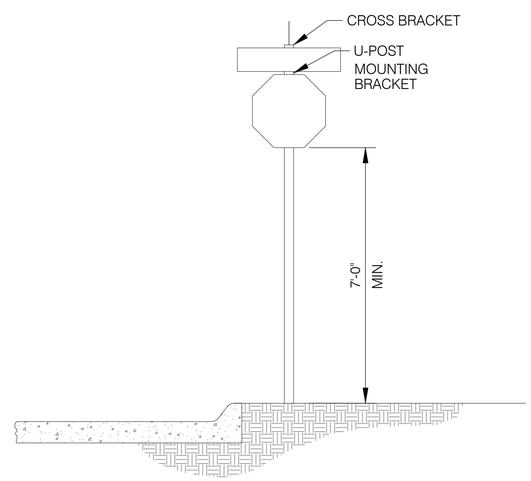

STREET NAME SIGN ABOVE STOP SIGN

NOTES

1. ALL MOUNTING HARDWARE SHALL BE GALVANIZED.

2. MOUNTING HARDWARE SHALL BE "BANDIT" OR PRE-APPROVED EQUAL. TYPES OF MOUNTING HARDWARE THAT MAY BE REQUIRED ARE:
   - C156 3/4" VALUCLIP
   - DO22 BRACK-IT
   - 3/4" x 0.020" BANDING STRAP

3. 6 3/4" OR 9" HEIGHT STREET NAME SIGNS SHALL BE MOUNTED ABOVE STOP SIGNS USING THE FOLLOWING MOUNTING DEVICES:
   91UH-NU180 BRACKET AND 9-90F CROSS BRACKET AS MANUFACTURED BY "HALL SIGNS" OR AN APPROVED EQUAL.

	CITY OF OMAHA PUBLIC WORKS DEPARTMENT		
TRAFFIC ENGINEER	**POST MOUNTED SIGNS**	**STANDARD PLATE 900-84**	SHEET 1/1
CITY ENGINEER		ISSUE DATE: ..... DECEMBER 10, 2013	

L:\Engineering\0110\DOCUMENTS\Standard Plates\ACAD Files from City\REVISED PLATE NUMERS\PLT-900-84.dwg, 2/18/2014 11:14:26 AM, rick4, 1:1.03774, Lamp, Rynearson & Associates

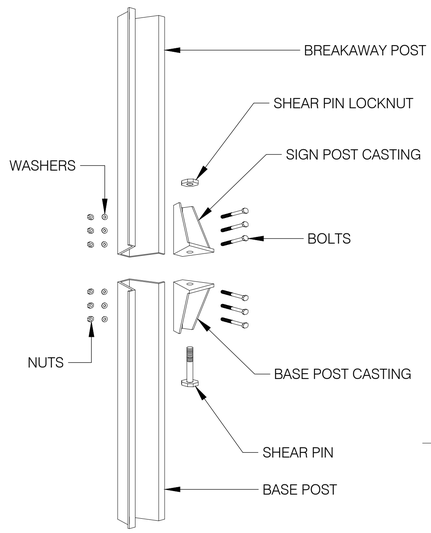

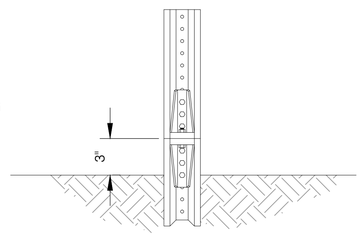

MINUTE-MAN CHANNEL POST BREAKAWAY SYSTEM

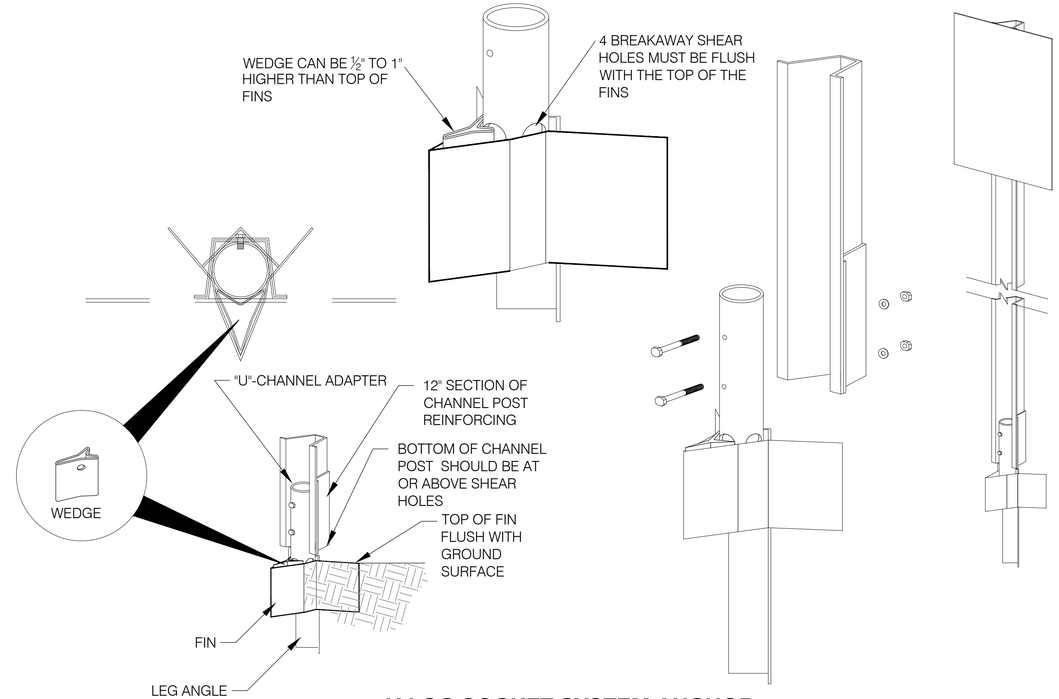

V-LOC SOCKET SYSTEM ANCHOR

	TUBING	LENGTH
SIGN POST ANCHOR	2 1/4" x 2 1/4"	3'-0"
ANCHOR SLEEVE	2 1/2" x 2 1/2"	1'-6"
SIGN POST	2" x 2"	VARIES

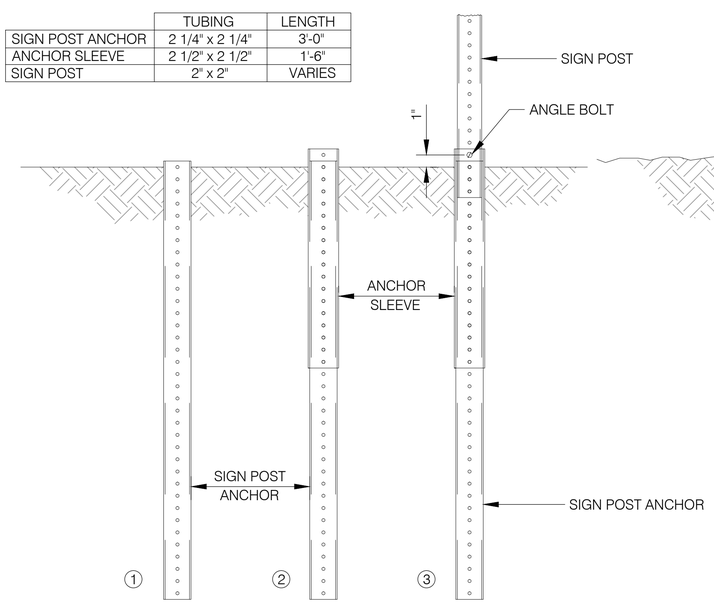

UNI-STRUT SIGN POST INSTALLATION

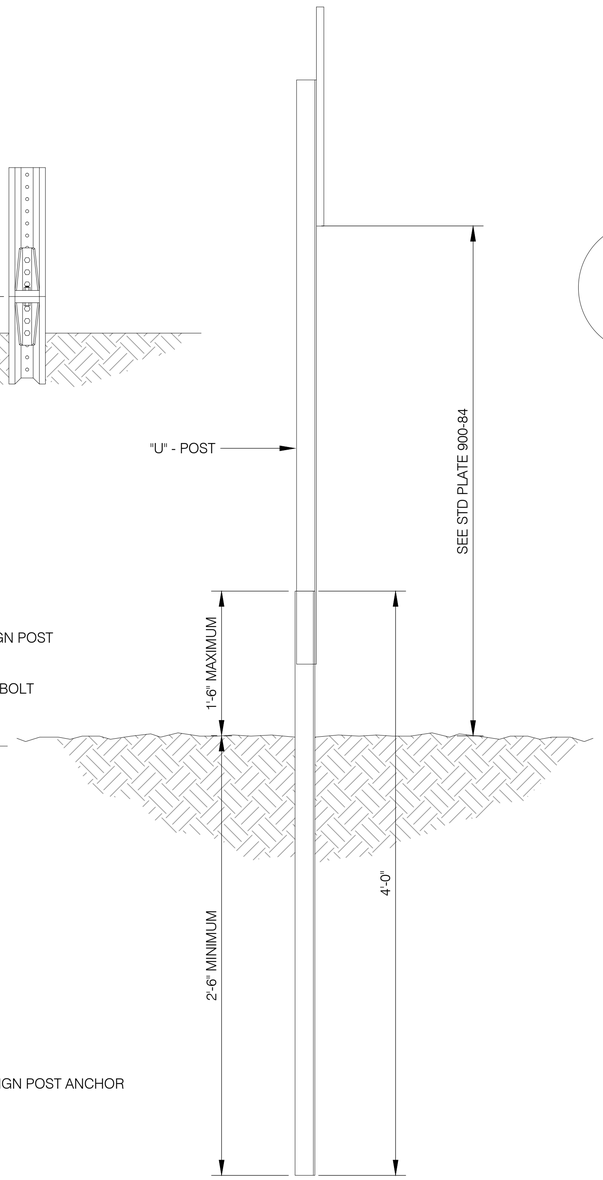

SIGN POST ANCHOR

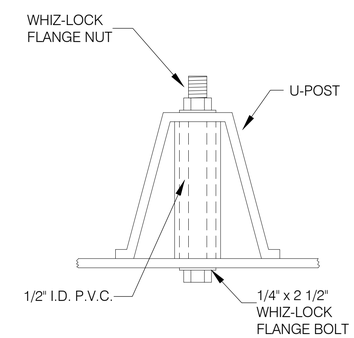

MOUNTING HARDWARE

NOTES

1. V-LOC SOCKET SYSTEM 19-VR3U WITH 12" CHANNEL POST ADAPTER SHALL BE NO. 19-UCA-2 OR PRE-APPROVED EQUAL.
2. THE MINUTE-MAN CHANNEL POST BREAKAWAY SYSTEM SHALL BE SUPPLIED AND INSTALLED WITHOUT THE CABLE TETHER TO KEEP THE POST AND STUB TOGETHER.

	TRAFFIC ENGINEER	CITY OF OMAHA PUBLIC WORKS DEPARTMENT	
	CITY ENGINEER	SIGN POST ANCHORING SYSTEMS	STANDARD PLATE 900-85 SHEET 1/1
			ISSUE DATE: ..... DECEMBER 10, 2013

L:\Engineering\011010\DOCUMENTS\Standard Plates\ACAD Files from City\REVISED PLATE NUMERS\PLT-900-85.dwg, 2/18/2014 11:17:33 AM, rick k, 1:1.03774, Lamp, Rynearson & Associates

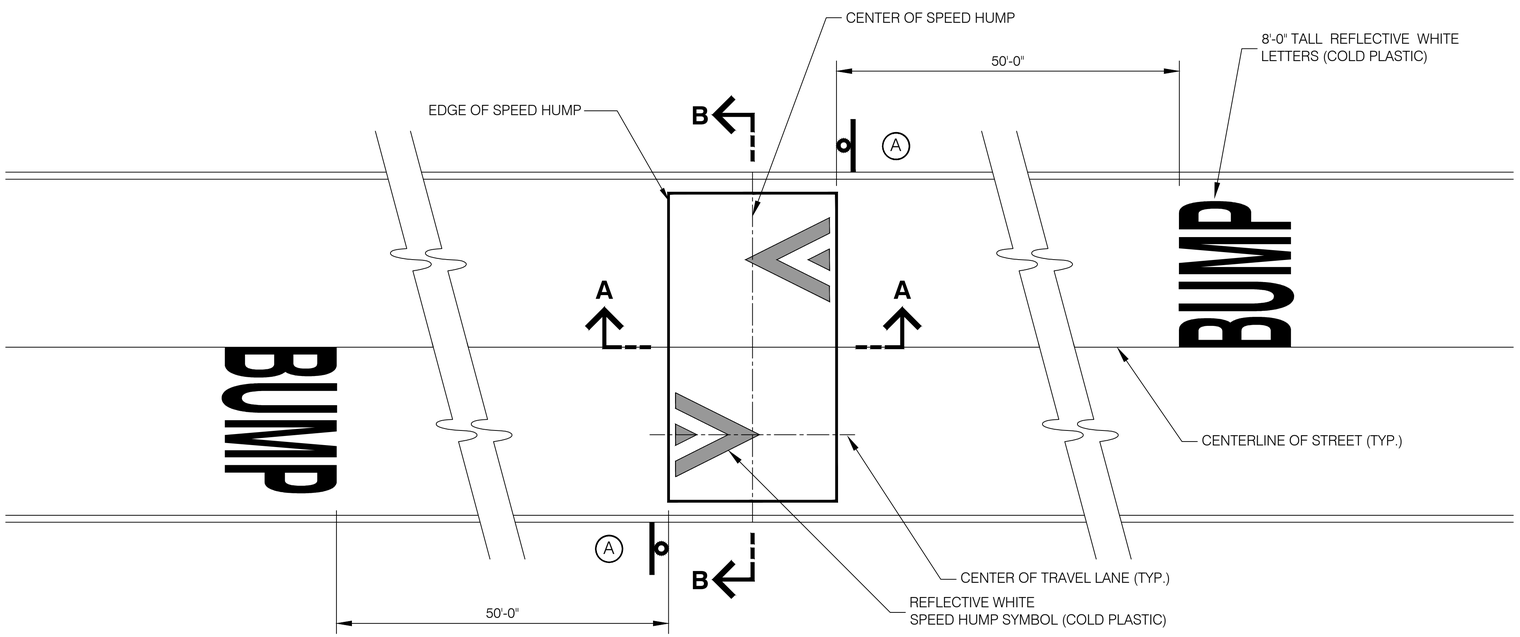

PLAN VIEW

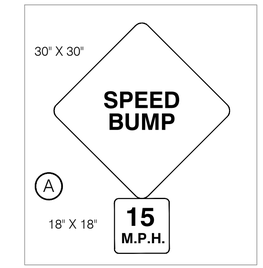

SIGNING LEGEND

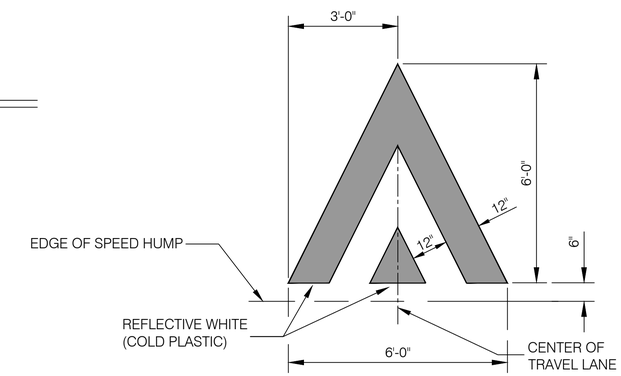

SPEED HUMP SYMBOL

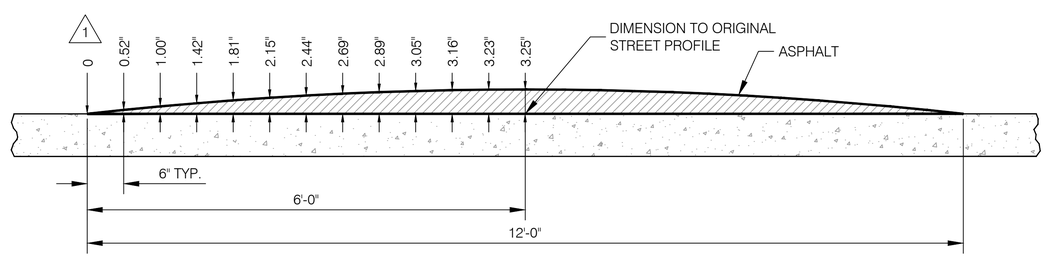

PROFILE SECTION A-A

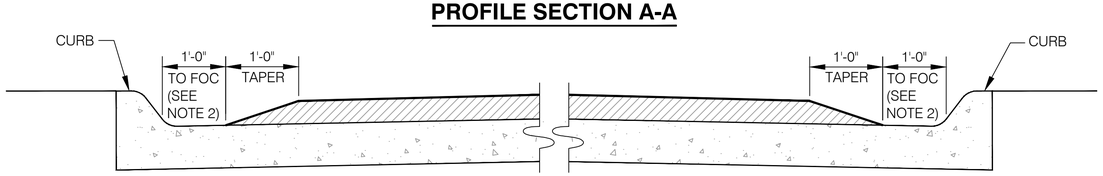

TYPICAL SECTION B-B

NOTES

1. PAVEMENT MARKINGS AND SIGNS ARE TO BE INSTALLED AT THE SAME TIME THE ASPHALT HUMP IS INSTALLED.
2. IF THE PAVEMENT CONSISTS OF ASPHALT SURFACE WITH CONCRETE COMBINATION CURB AND GUTTER, THE TAPER SHALL BEGIN AT THE OUTSIDE EDGE OF THE CONCRETE GUTTER.

		TRAFFIC ENGINEER	CITY OF OMAHA PUBLIC WORKS DEPARTMENT
		CITY ENGINEER	SPEED HUMP ASPHALT SPEED HUMP
			STANDARD PLATE 900-90 SHEET 1/2
			ISSUE DATE: ..... DECEMBER 10, 2013

L:\Engineering\011\01\02\DOCUMENTS\Standard Plates\ACAD Files from City\REVISED PLATE NUMERS\PLT-900-90 (1).dwg, 3/20/2014 1:47:06 PM, rick, 1:1.03774, Lamp, Rynearson & Associates

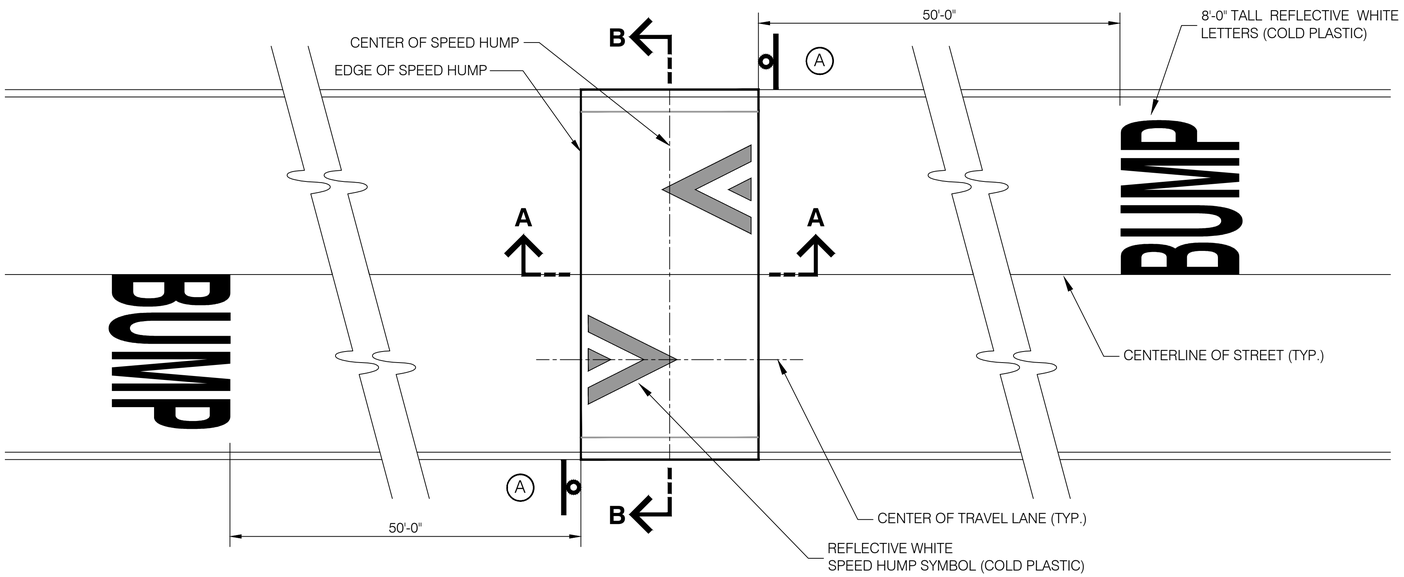

PLAN VIEW

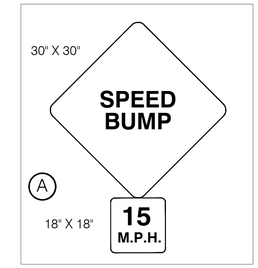

SIGNING LEGEND

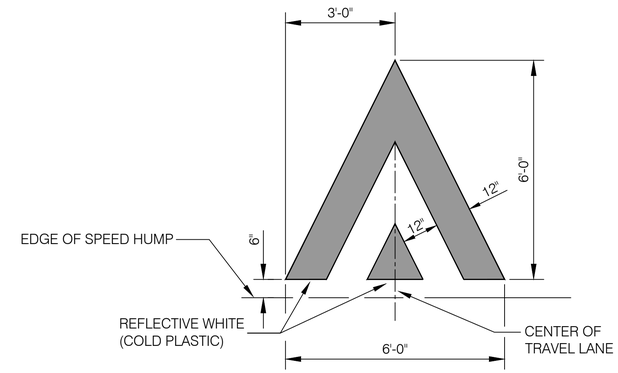

SPEED HUMP SYMBOL

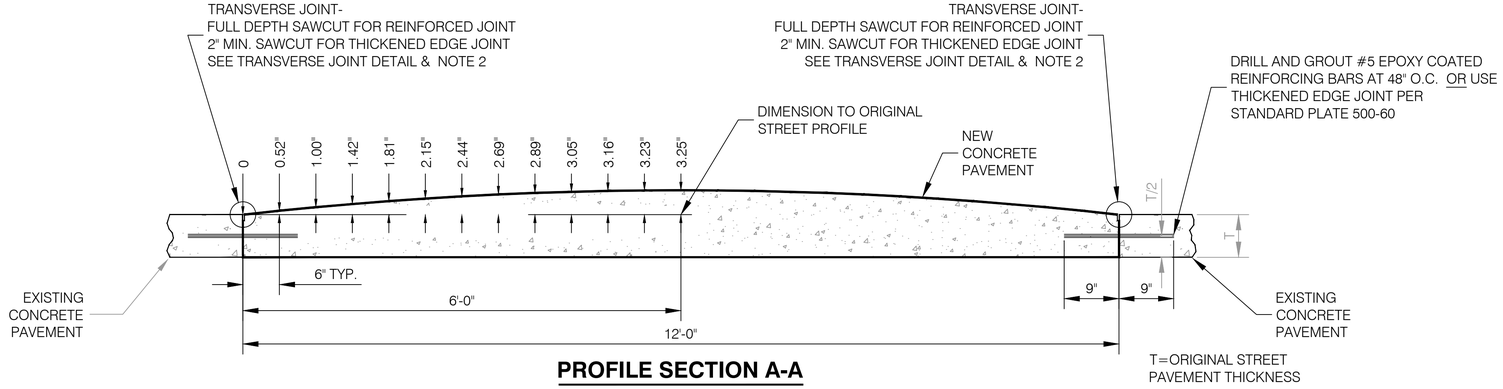

PROFILE SECTION A-A

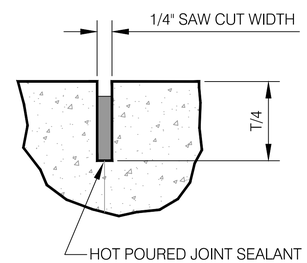

LONGITUDINAL JOINT DETAIL

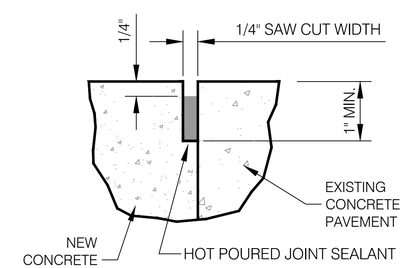

TRANSVERSE JOINT DETAIL

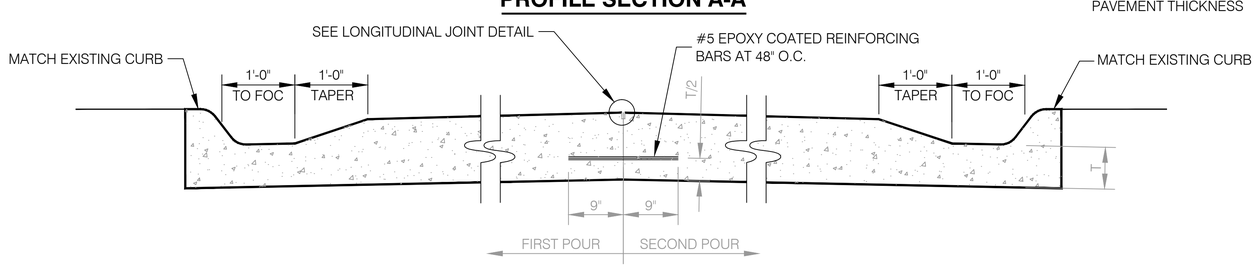

TYPICAL SECTION B-B

NOTES

1. SIGNS ARE TO BE INSTALLED AT THE SAME TIME THE CONCRETE HUMP IS INSTALLED.
2. IN SOME SITUATIONS, A TRANSVERSE JOINT MAY BE LOCATED BEYOND THE EDGE OF THE SPEED HUMP,
   FOR EXAMPLE: TO REPLACE ADDITIONAL PAVEMENT OR TO MATCH UP TO AN EXISTING TRANSVERSE JOINT.

		TRAFFIC ENGINEER	CITY OF OMAHA PUBLIC WORKS DEPARTMENT
		CITY ENGINEER	SPEED HUMP CONCRETE SPEED HUMP

STANDARD PLATE **900-90** SHEET 2/2

ISSUE DATE: ..... DECEMBER 10, 2013

L:\Engineering\011010\DOCUMENTS\Standard Plates\ACAD Files from City\REVISED PLATE NUMERS\PL T-900-90 (2).dwg, 3/20/2014 1:48:17 PM, rickk, 1:1.03774, Lamp, Rynearson & Associates

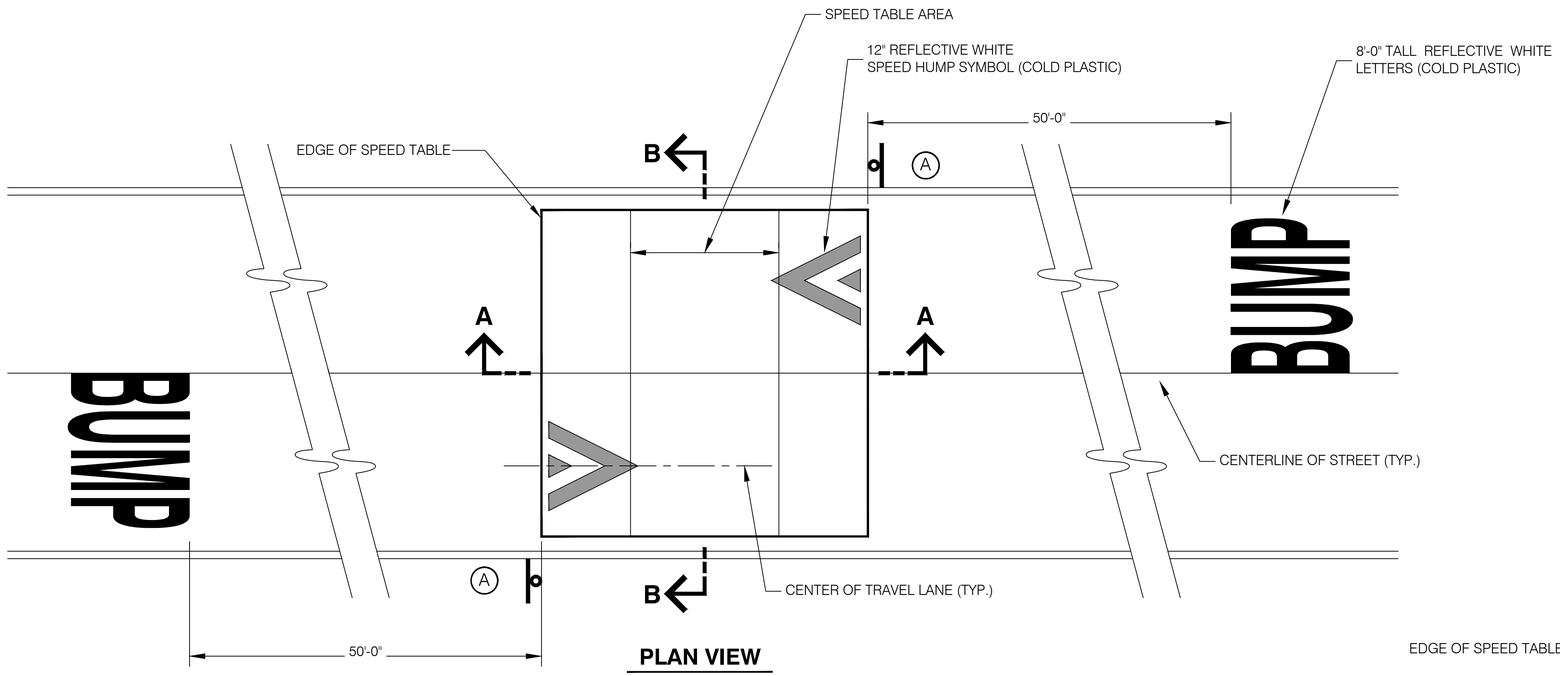

PLAN VIEW

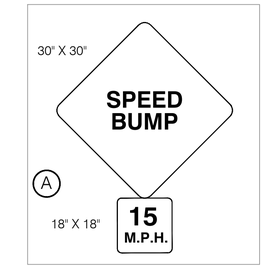

SIGNING LEGEND

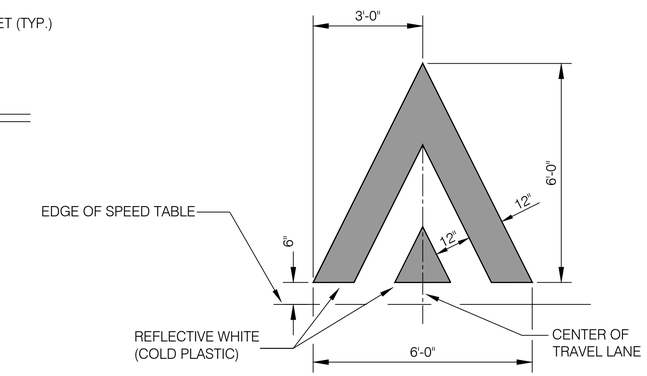

SPEED HUMP SYMBOL

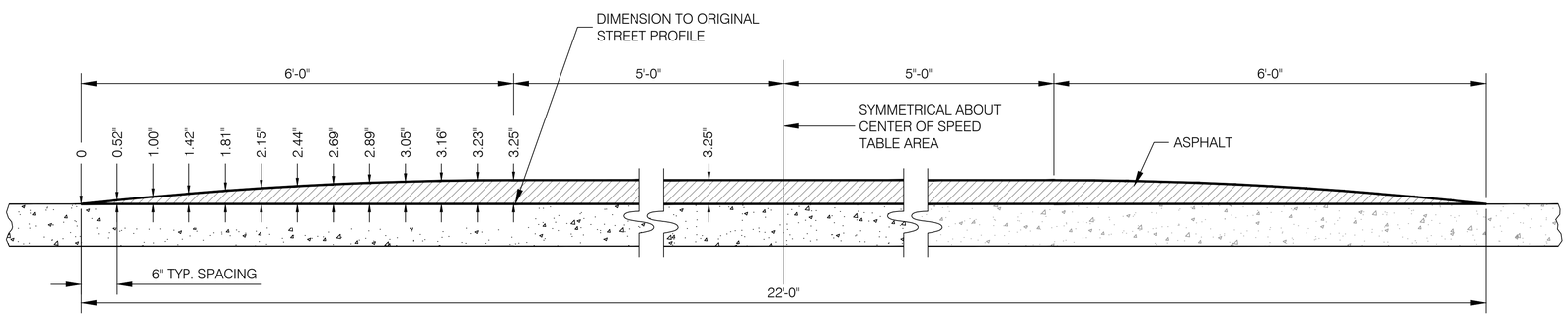

PROFILE SECTION A-A

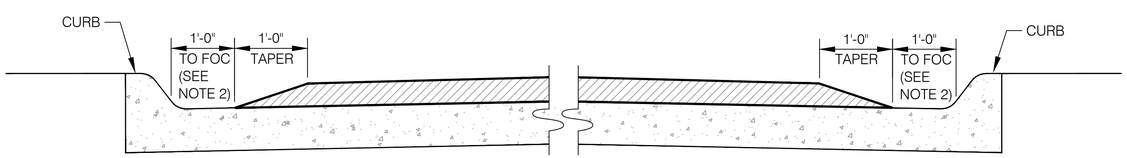

TYPICAL SECTION B-B

NOTES

1. PAVEMENT MARKINGS AND SIGNS ARE TO BE INSTALLED AT THE SAME TIME THE ASPHALT TABLE IS INSTALLED.
2. IF THE PAVEMENT CONSISTS OF ASPHALT SURFACE WITH CONCRETE COMBINATION CURB AND GUTTER, THE TAPER SHALL BEGIN AT THE OUTSIDE EDGE OF THE CONCRETE GUTTER.

		TRAFFIC ENGINEER	CITY OF OMAHA PUBLIC WORKS DEPARTMENT
		CITY ENGINEER	**SPEED TABLE** ASPHALT SPEED TABLE
			STANDARD PLATE **900-91** SHEET 1/3
			ISSUE DATE: ..... DECEMBER 10, 2013

L:\Engineering\01101\02\DOCUMENTS\Standard Plates\ACAD Files from City\REVISED PLATE NUMERS\PLT-900-91 (1).dwg, 3/20/2014 1:49:36 PM, rickk, 1:1.03774, Lamp, Rynearson & Associates

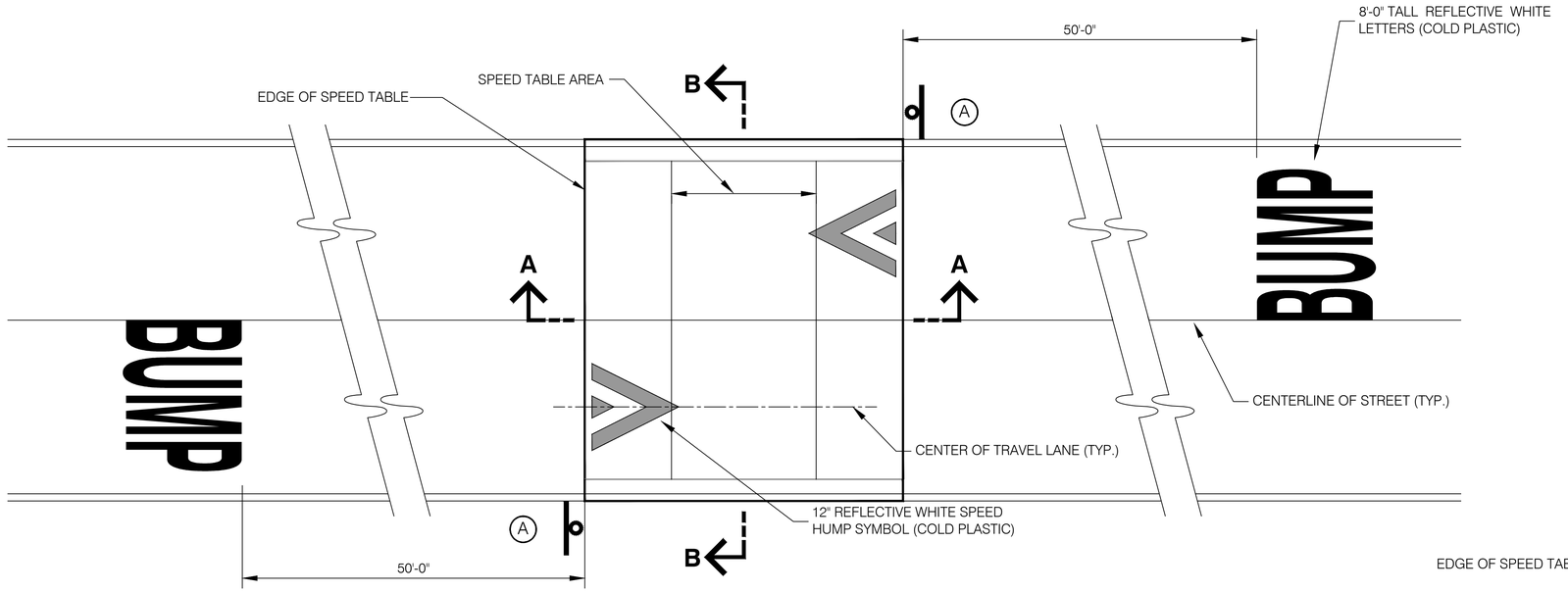

PLAN VIEW

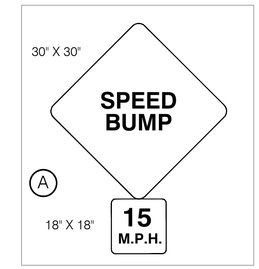

SIGNING LEGEND

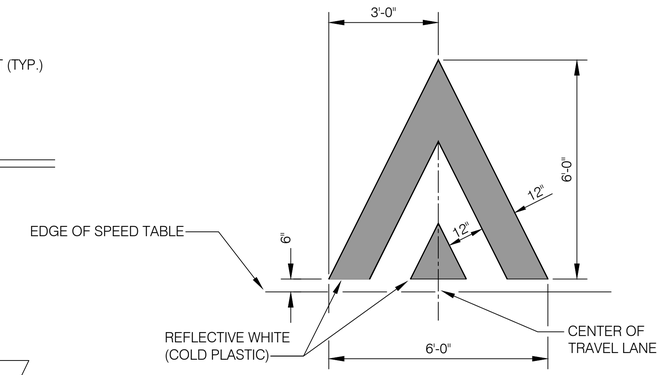

SPEED HUMP SYMBOL

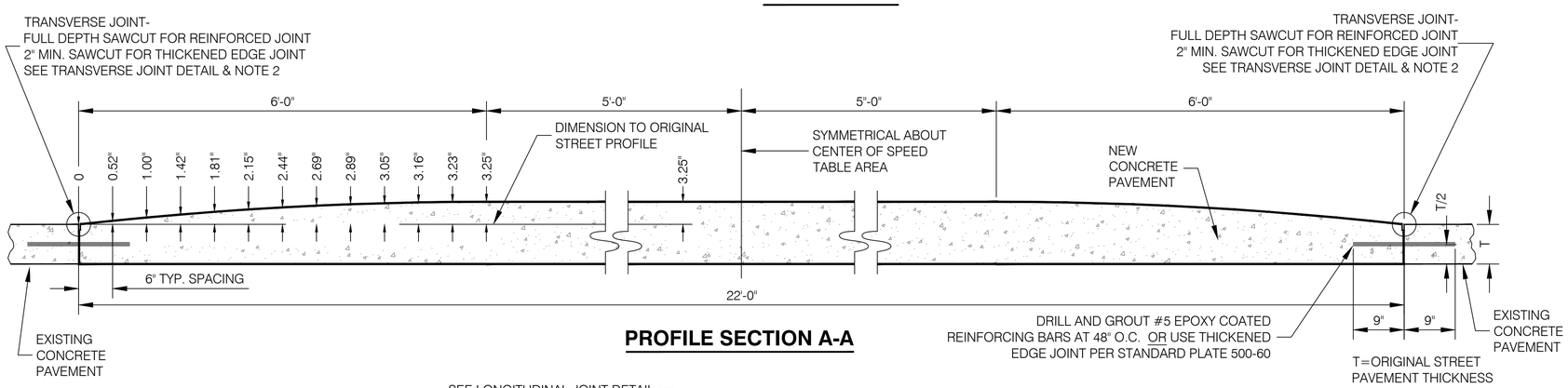

PROFILE SECTION A-A

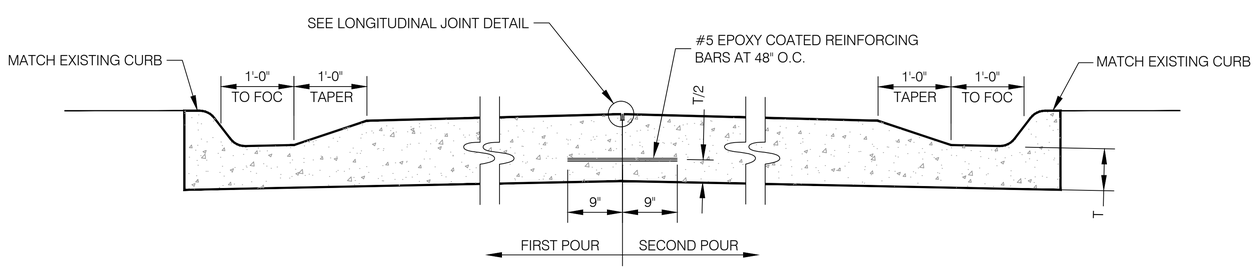

TYPICAL SECTION B-B

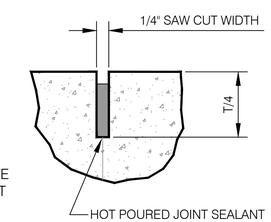

LONGITUDINAL JOINT DETAIL

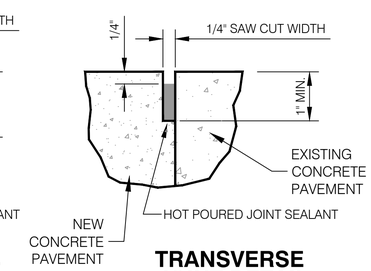

TRANSVERSE JOINT DETAIL

NOTES

1. SIGNS ARE TO BE INSTALLED AT THE SAME TIME THE CONCRETE TABLE IS INSTALLED.
2. IN SOME SITUATIONS, A TRANSVERSE JOINT MAY BE LOCATED BEYOND THE EDGE OF THE SPEED TABLE, FOR EXAMPLE: TO REPLACE ADDITIONAL PAVEMENT OR TO MATCH AN EXISTING TRANSVERSE JOINT.

		TRAFFIC ENGINEER	CITY OF OMAHA PUBLIC WORKS DEPARTMENT
		CITY ENGINEER	SPEED TABLE CONCRETE SPEED TABLE
			STANDARD PLATE 900-91 — SHEET 2/3
			ISSUE DATE: .....DECEMBER 10, 2013

L:\Engineering\01101\02\DOCUMENTS\Standard Plates\ACAD Files from City\REVISED PLATE NUMERS\PL T-900-91 (2).dwg, 3/20/2014 1:50:45 PM, rickk, 1:1.03774, Lamp, Rynearson & Associates

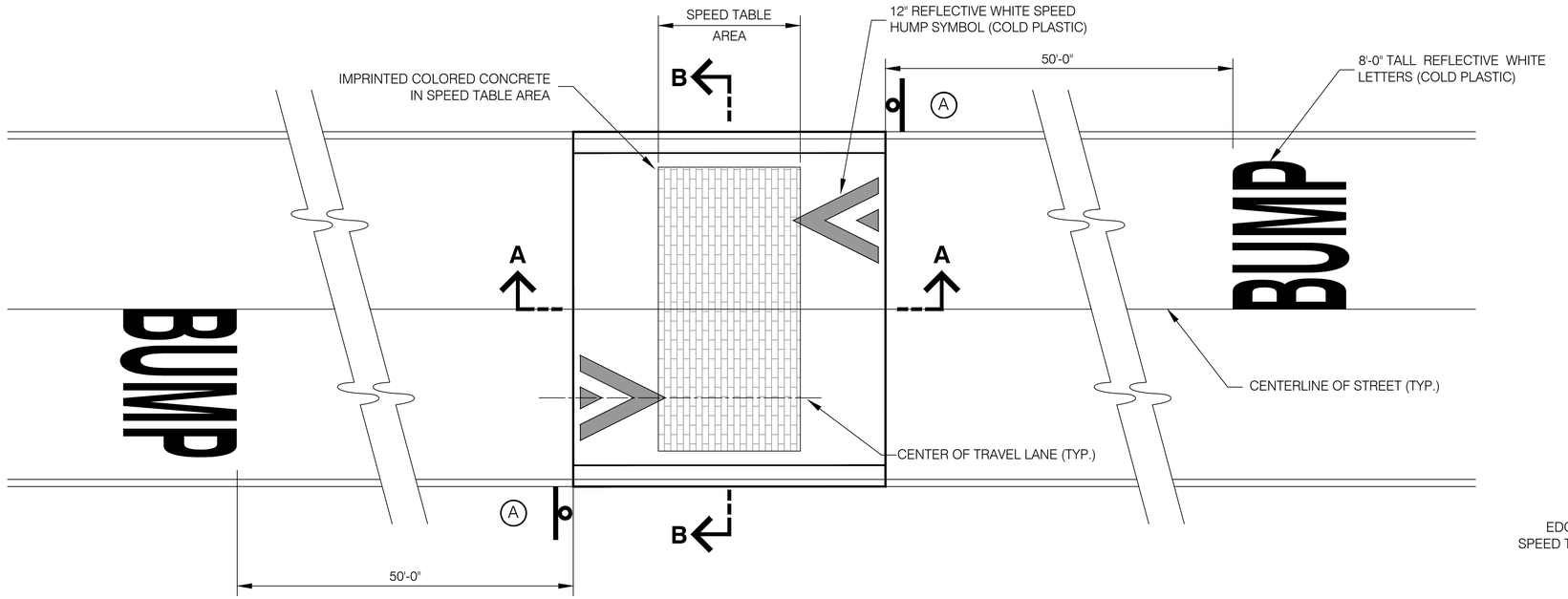

PLAN VIEW

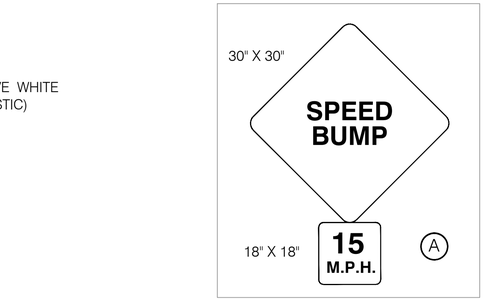

SIGNING LEGEND

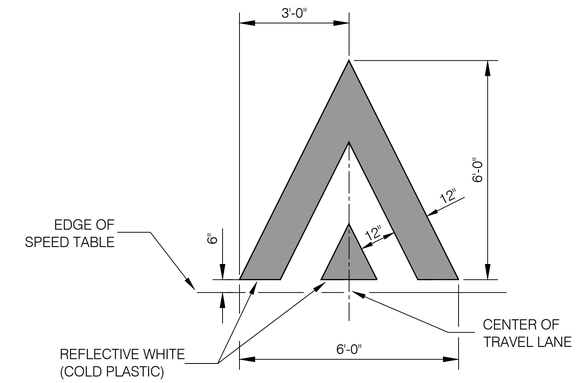

SPEED HUMP SYMBOL

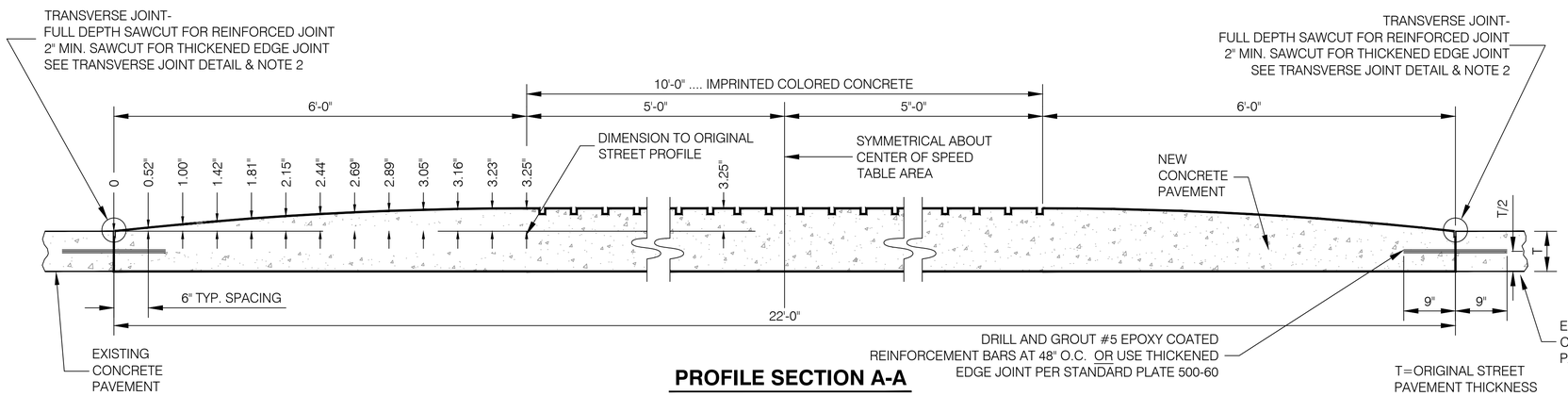

PROFILE SECTION A-A

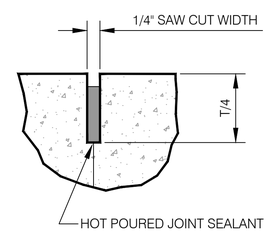

LONGITUDINAL JOINT DETAIL

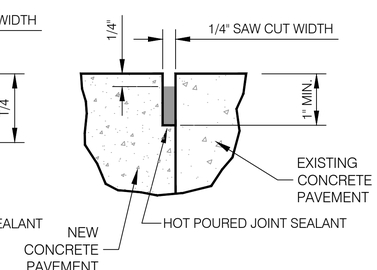

TRANSVERSE JOINT DETAIL

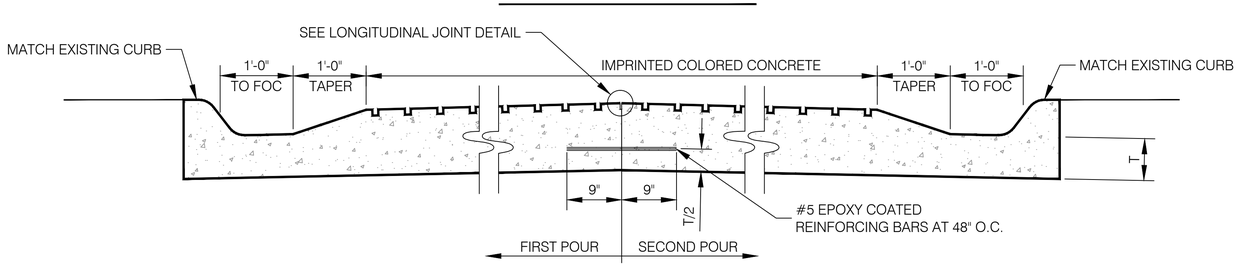

TYPICAL SECTION B-B

NOTES

1. SIGNS ARE TO BE INSTALLED AT THE SAME TIME THE CONCRETE TABLE IS INSTALLED.
2. IN SOME SITUATIONS, A TRANSVERSE JOINT MAY BE LOCATED BEYOND THE EDGE OF THE SPEED TABLE, FOR EXAMPLE: TO REPLACE ADDITIONAL PAVEMENT OR TO MATCH AN EXISTING TRANSVERSE JOINT.

		TRAFFIC ENGINEER	CITY OF OMAHA PUBLIC WORKS DEPARTMENT
		CITY ENGINEER	**SPEED TABLE** IMPRINTED CONCRETE SPEED TABLE

STANDARD PLATE **900-91** SHEET 3/3

ISSUE DATE: ..... DECEMBER 10, 2013

L:\Engineering\011010200\DOCUMENTS\Standard Plates\ACAD Files from City\REVISED PLATE NUMBERS\PLT-900-91 (3).dwg, 3/20/2014 1:51:47 PM, rick4, 1:1.03774, Lamp, Rynearson & Associates

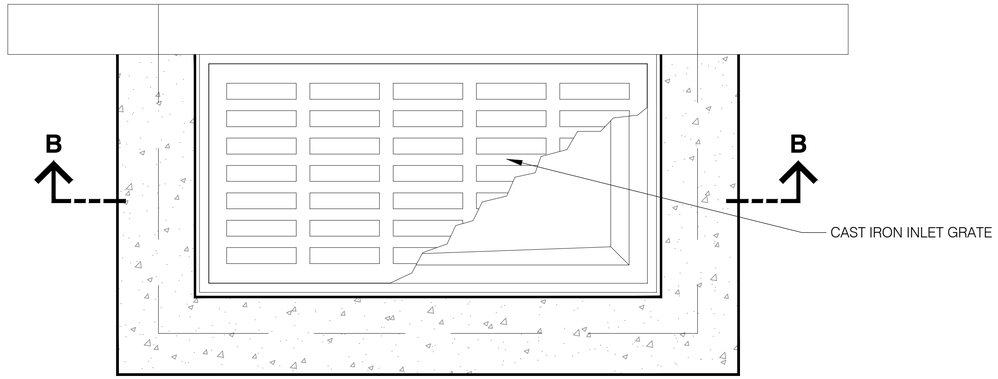

INLET PLAN

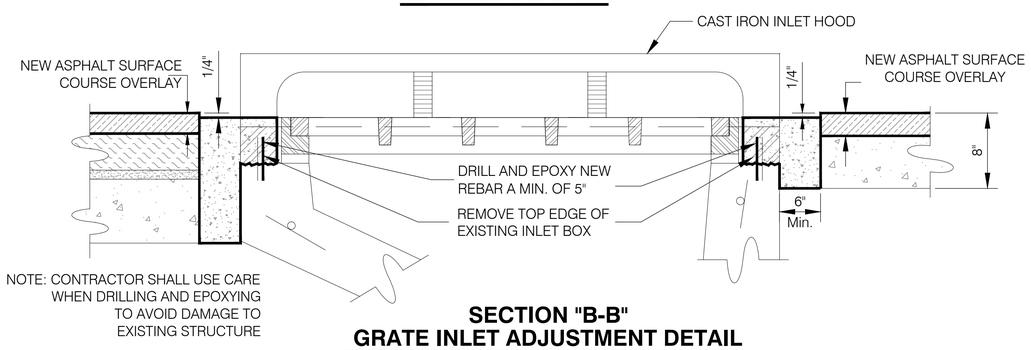

SECTION "B-B"
GRATE INLET ADJUSTMENT DETAIL

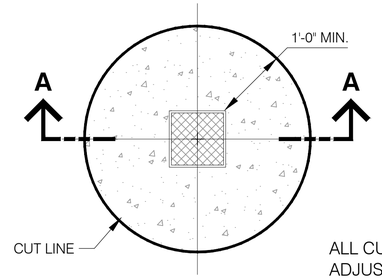

UTILITY COVER

ALL CUTS FOR ADJUSTMENTS SHALL BE SQUARE

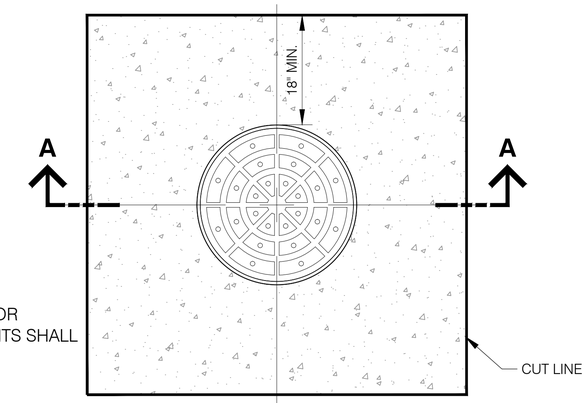

MANHOLE COVER

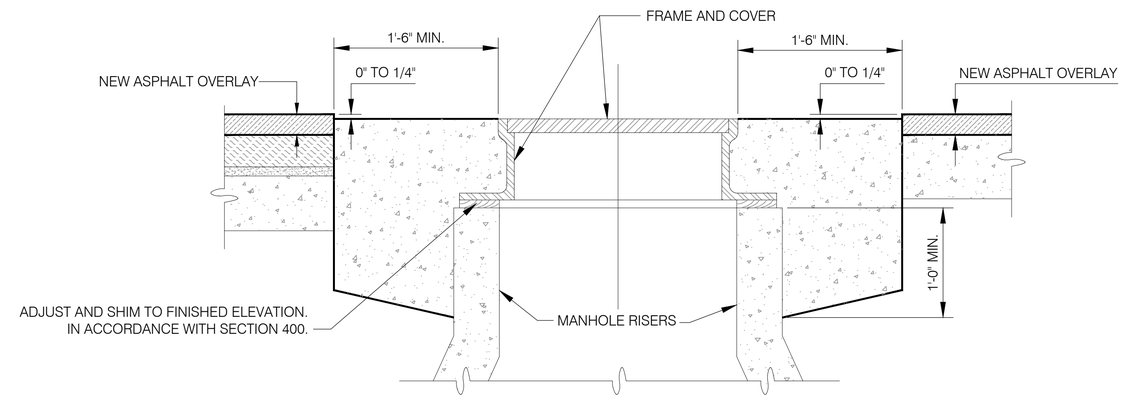

SECTION "A-A" COVER ADJUSTMENT

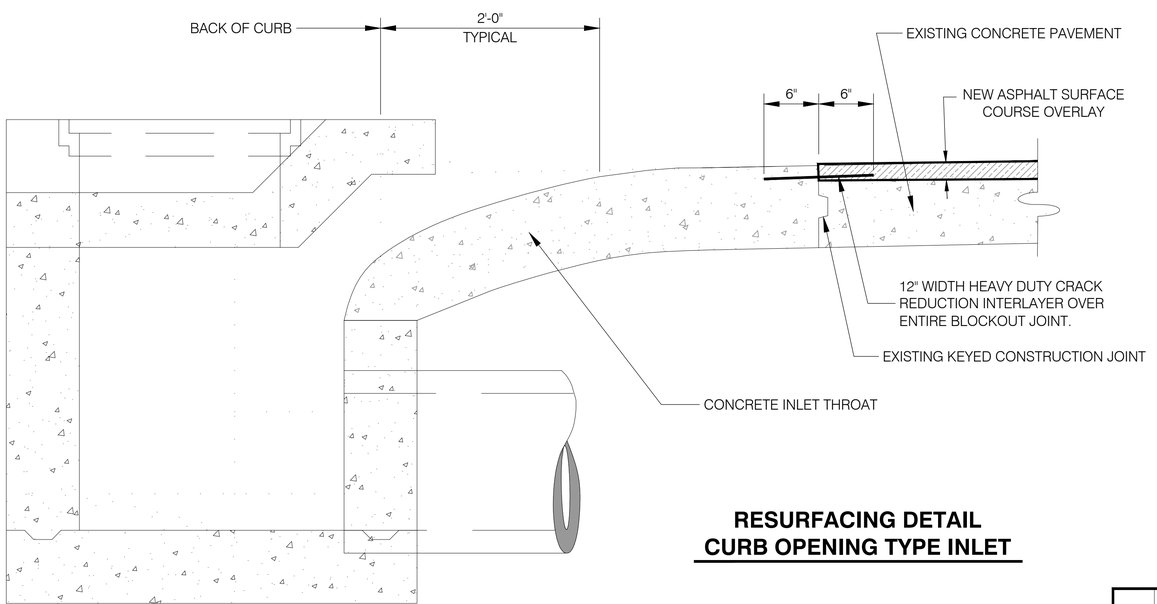

RESURFACING DETAIL
CURB OPENING TYPE INLET

NOTES

1. ADJUST MANHOLE COVERS, UTILITY COVERS AND INLETS TO GRADE FOLLOWING STREET RESURFACING.
2. UTILITY COMPANIES SHALL IDENTIFY, LOCATE AND MARK THEIR MANHOLES / COVERS PRIOR TO RESURFACING. THE CONTRACTOR SHALL BE RESPONSIBLE FOR LOCATING AND ADJUSTING ANY UNMARKED BURIED COVERS.
3. REMOVE EXISTING PAVEMENT AROUND UTILITY TO ALLOW FOR ADJUSTMENT. REMOVE SIDEWALL OR FRAME AND ALL CONCRETE GROUT TO FORM A CONTINUOUS BED FOR THE FRAME TO BE PLACED ON. ADJUST FRAME TO GRADE USING CONCRETE OR BRICK. STRIKE OFF EXCESS GROUT ON THE INSIDE OF THE FRAME TO A SMOOTH FINISH. CONCRETE FOR THE ADJUSTING SLAB SHALL BE L-85. SLAB SHALL BE CURED WITH A LIQUID CURE. CONCRETE SHALL BE VIBRATED AFTER PLACEMENT.
4. THE CONTRACTOR SHALL REINSTALL COVERS AND FRAMES IN ADJUSTED LOCATIONS. CONTRACTOR SHALL EXCHANGE AND REPLACE ANY UNSUITABLE CASTINGS PRIOR TO MAKING ADJUSTMENTS.
5. CONTRACTOR SHALL CONSTRUCT FLAT TOP SLAB WHEN MANHOLE ADJUSTMENT REQUIRES REMOVING PART OR ALL OF CONE SECTION.
6. MANHOLE ADJUSTMENTS IN EXCESS OF 4 INCHES SHALL BE ACCOMPLISHED WITH PRECAST RISER SECTIONS AND MEASURED FOR PAYMENT AS THE BID ITEM "ADJUST MANHOLE TO GRADE".

		CITY OF OMAHA	PUBLIC WORKS DEPARTMENT
	DESIGN ENGINEER	ASPHALT PAVEMENT RESURFACING ADJUSTMENT	STANDARD PLATE 1000-01 — SHEET 1/1
	CITY ENGINEER		ISSUE DATE: ..... DECEMBER 10, 2013

L:\Engineering\011010\DOCUMENTS\Standard Plates\ACAD Files from City\REVISED PLATE NUMERS\PLT-1000-01.dwg, 2/19/2014 11:38:35 AM, rick, 1:1.03774, Lamp, Rynearson & Associates

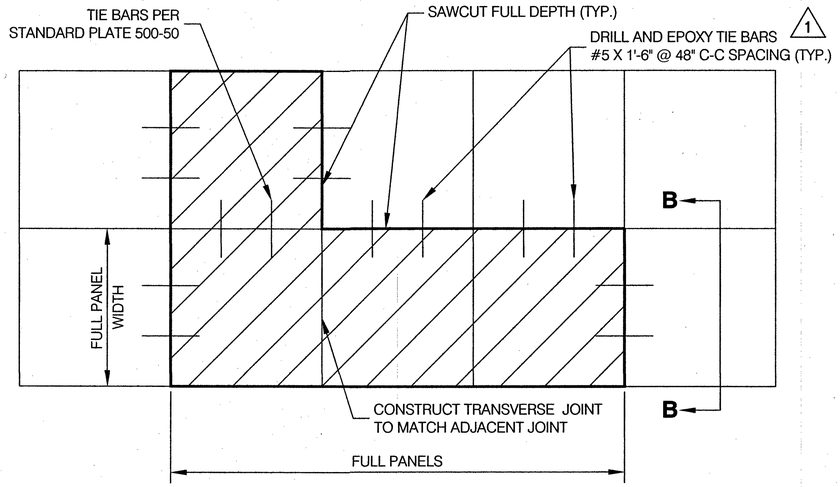

RIGID PAVEMENT REPAIR PLAN (LARGE AREA)

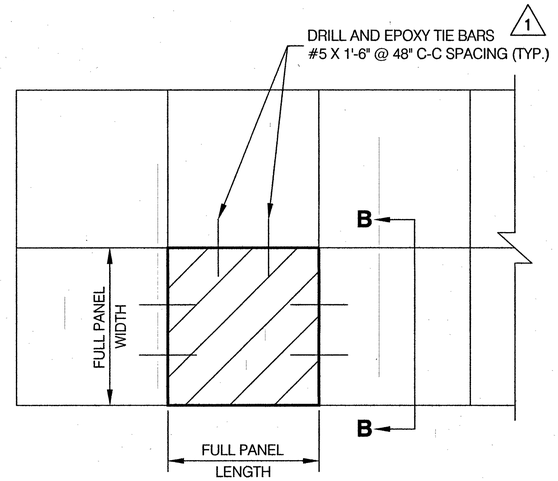

RIGID PAVEMENT REPAIR PLAN (SMALL AREA) *

* REQUIREMENTS SHALL BE IN ACCORDANCE WITH THE TABLE SHOWN REGARDING THICKNESS AND TIE BARS

PAVEMENT REPAIR REQUIREMENTS

	SMALL AREA RESIDENTIAL (<60 SY)	SMALL AREA MAJOR COLLECTOR (<60 SY)	LARGE AREA (>60 SY)	REPAIR METHOD
RIGID PAVEMENT	REPAIR CUT **, ***	FULL PANEL(S) REMOVAL	FULL PANEL(S) REMOVAL	FULL DEPTH CONCRETE
ASPHALT SURFACE PAVEMENT	REPAIR CUT **, ***	LANE WIDTH REMOVAL (CURB PER ENGINEER)	LANE WIDTH REMOVAL (PLUS CURB)	FULL DEPTH CONCRETE
REPAIR THICKNESS	T+2" OR T+TIE BARS *	T+TIE BARS *	T+TIE BARS *	

* IF SURROUNDING PAVEMENT CONDITION INHIBITS THE USE OF TIE BARS, AT THE ENGINEER'S DIRECTION REPAIR DEPTH SHALL BE T+2".
** ALL TRANSVERSE/LONGITUDINAL JOINTS FOR THE REPAIR SHALL BE NO LESS THAN 4' FROM THE NEAREST EXISTING JOINT OR MEET THE 4' RULE FOR REMOVAL TO NEAREST JOINT.
*** SMALL AREA RESIDENTIAL PAVEMENT REPAIRS ON PAVEMENT 5 YEARS OLD OR NEWER SHALL REQUIRE FULL PANEL REPAIR FOR RIGID PAVEMENT AND FULL LANE WIDTH REPAIR FOR ASPHALT SURFACE PAVEMENT.

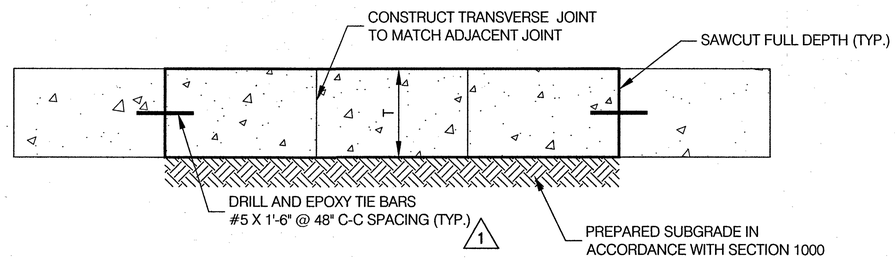

RIGID PAVEMENT REPAIR SECTION (LARGE AREA)

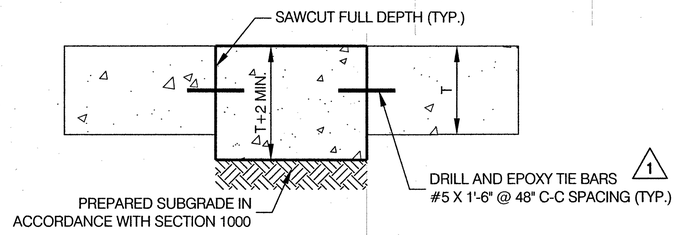

RIGID PAVEMENT REPAIR SECTION (SMALL AREA) *

* REQUIREMENTS SHALL BE IN ACCORDANCE WITH THE TABLE SHOWN REGARDING THICKNESS AND TIE BARS

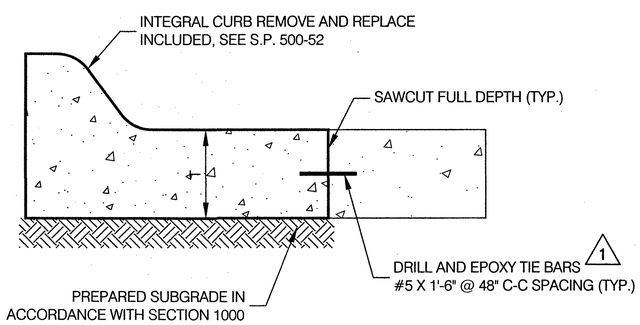

RIDGID PAVEMENT REPAIR SECTION (LARGE AREA)

SECTION B-B

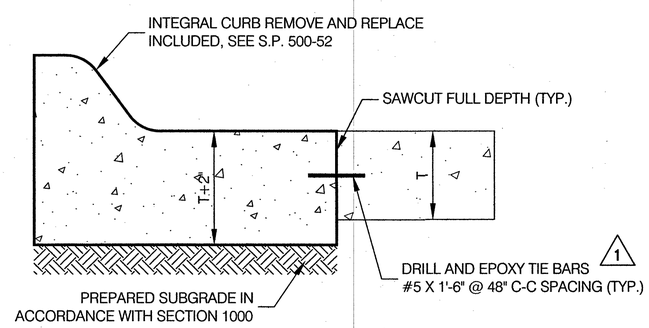

RIGID PAVEMENT REPAIR SECTION (SMALL AREA)

SECTION B-B *

* REQUIREMENTS SHALL BE IN ACCORDANCE WITH THE TABLE SHOWN REGARDING THICKNESS AND TIE BARS

NOTES

1. REMOVAL LIMITS AS DIRECTED BY ENGINEER.
2. FULL DEPTH SAWCUT AROUND PERIMETER REQUIRED.
3. MINIMUM THICKNESS SHALL BE IN ACCORDANCE WITH SECTION 1000.
4. ALL TIE BARS SHALL BE EPOXY COATED.
5. ALL JOINTS SHALL BE SAWED AND SEALED AFTER PAVING, INCLUDING CONSTRUCTION JOINTS.
6. CURB REPLACEMENT SHALL MATCH EXISTING CURB.
7. ADDITIONAL REQUIREMENTS INCLUDE BUT NOT LIMITED TO PAVEMENT MARKINGS AND SURROUNDING AREA RESTORATION, SHALL BE IN ACCORDANCE WITH SECTION 1000.

1	6/19/2015	Kirk R Pfeff DESIGN ENGINEER Todd Pfeifer CITY ENGINEER	CITY OF OMAHA PUBLIC WORKS DEPARTMENT PAVEMENT REPAIR STANDARD PLATE 1000-03 SHEET 1/4 ISSUE DATE: ... DECEMBER 10, 2013

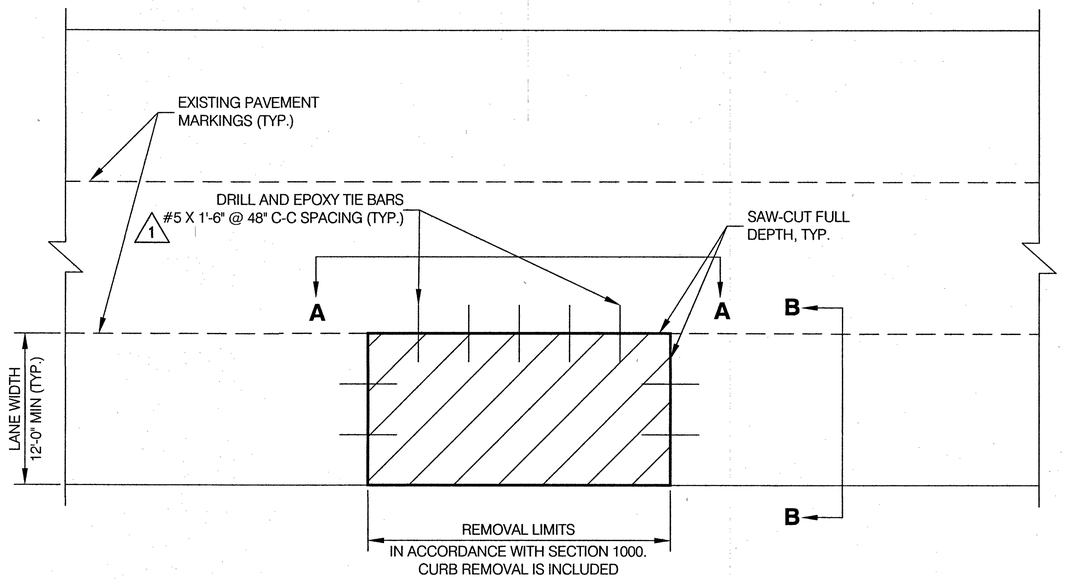

ASPHALT SURFACE PAVEMENT REPAIR PLAN (LARGE AREA)

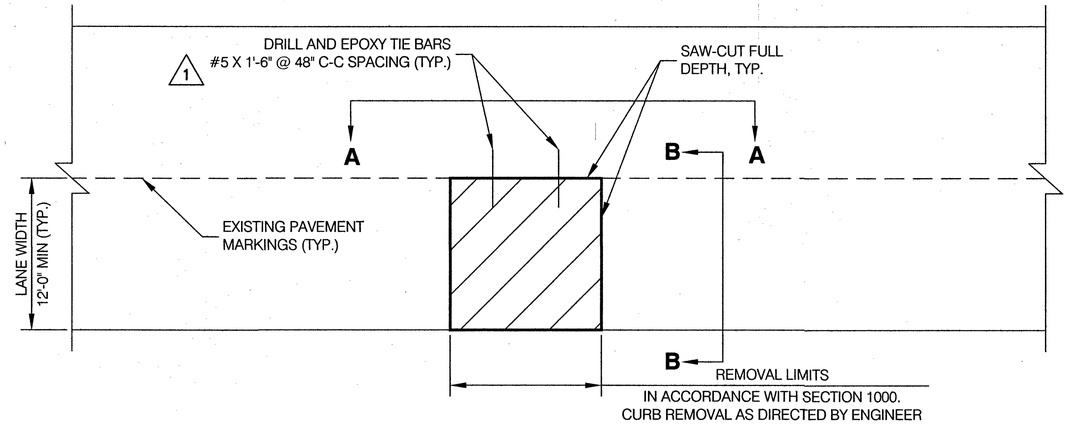

ASPHALT SURFACE PAVEMENT REPAIR PLAN (SMALL AREA)

* BARS ARE TO BE DRILLED @ HALF THE DEPTH OF EXISTING RIGID PAVEMENT, TYP.

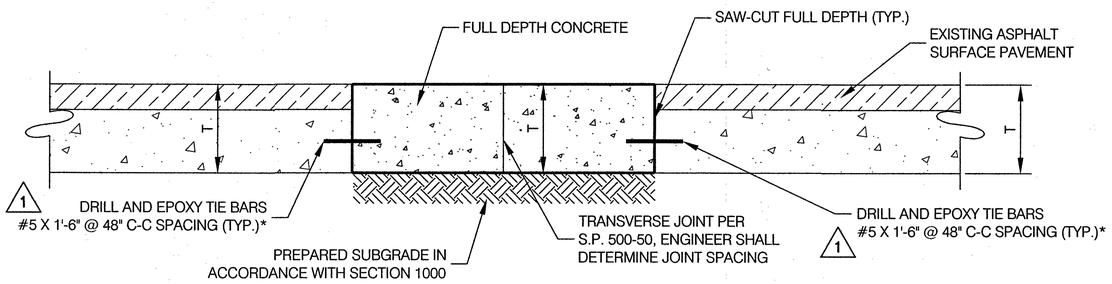

ASPHALT SURFACE PAVEMENT SECTION (LARGE AREA)

SECTION A-A

* BARS ARE TO BE DRILLED @ HALF THE DEPTH OF EXISTING RIGID PAVEMENT, TYP.

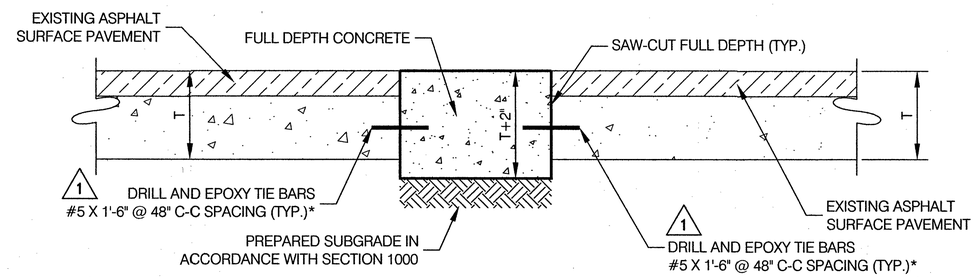

ASPHALT SURFACE PAVEMENT SECTION (SMALL AREA)

SECTION A-A

* BARS ARE TO BE DRILLED @ HALF THE DEPTH OF EXISTING RIGID PAVEMENT, TYP.

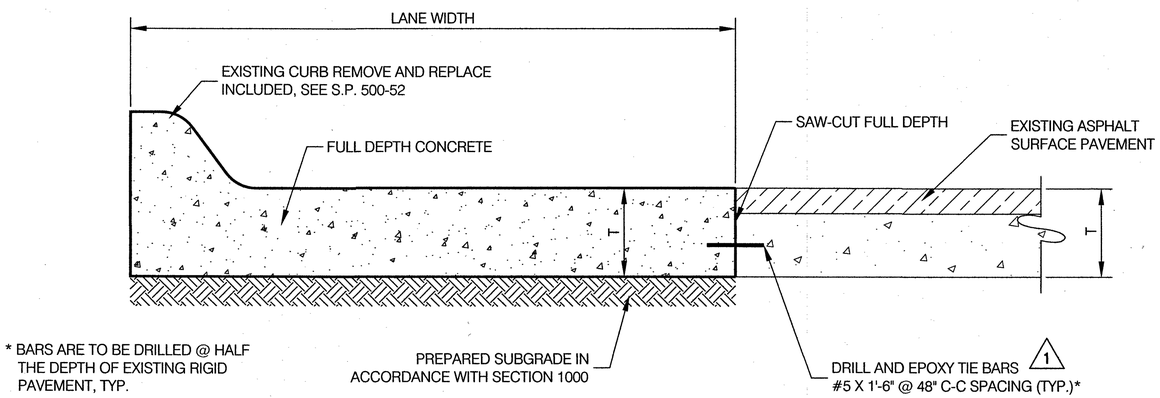

* BARS ARE TO BE DRILLED @ HALF THE DEPTH OF EXISTING RIGID PAVEMENT, TYP.

ASPHALT SURFACE PAVEMENT SECTION (LARGE AREA)

SECTION B-B

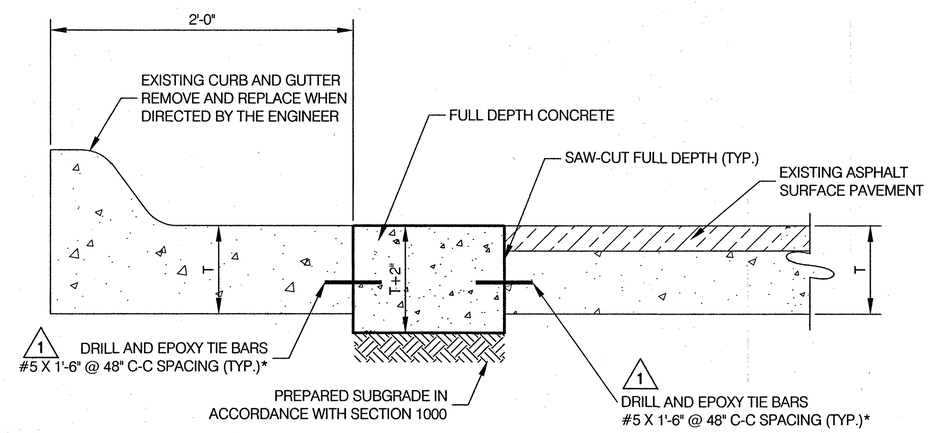

ASPHALT SURFACE PAVEMENT SECTION (SMALL AREA)

SECTION B-B

* BARS ARE TO BE DRILLED @ HALF THE DEPTH OF EXISTING RIGID PAVEMENT, TYP.

1	6/19/2015	DESIGN ENGINEER CITY ENGINEER	CITY OF OMAHA PUBLIC WORKS DEPARTMENT PAVEMENT REPAIR	STANDARD PLATE **1000-03** SHEET 2/4 ISSUE DATE: ... DECEMBER 10, 2013

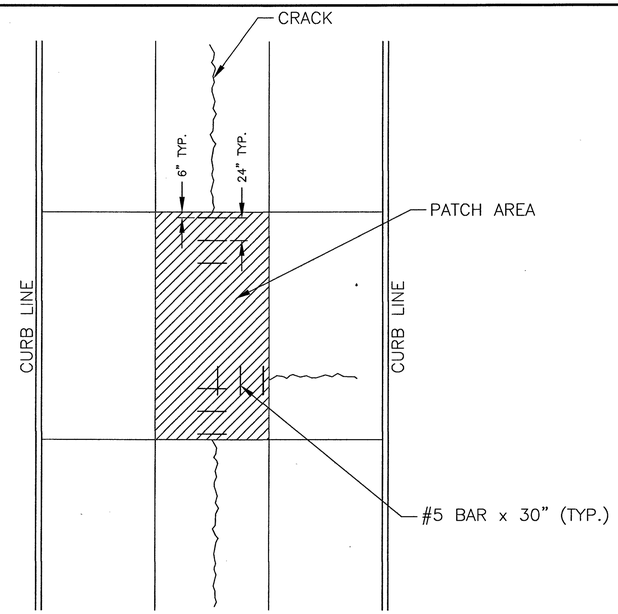

ADDITIONAL REINFORCING DETAIL

NO SCALE

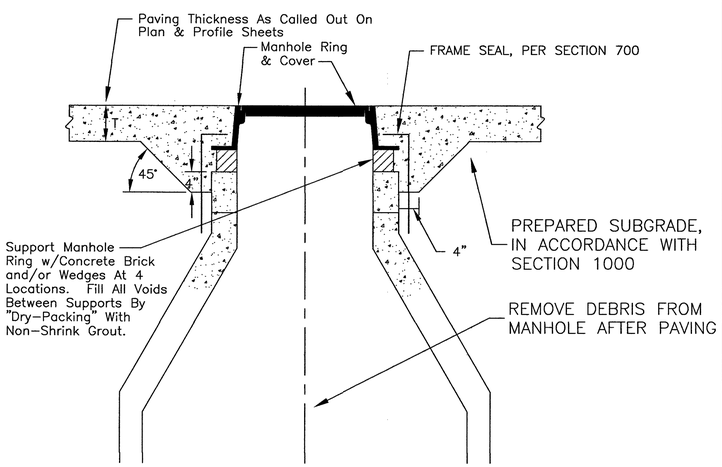

MANHOLE ADJUSTMENT DETAIL

NO SCALE

NOTES:

1. Grout Shall Be non-shrink, sulfate-resistant grout.
2. To Prevent Traffic over ungrouted Manhole Place Type II Barricade Over Manhole During Joint Sawing And Maintain Barricade Until Grout Has Cured.

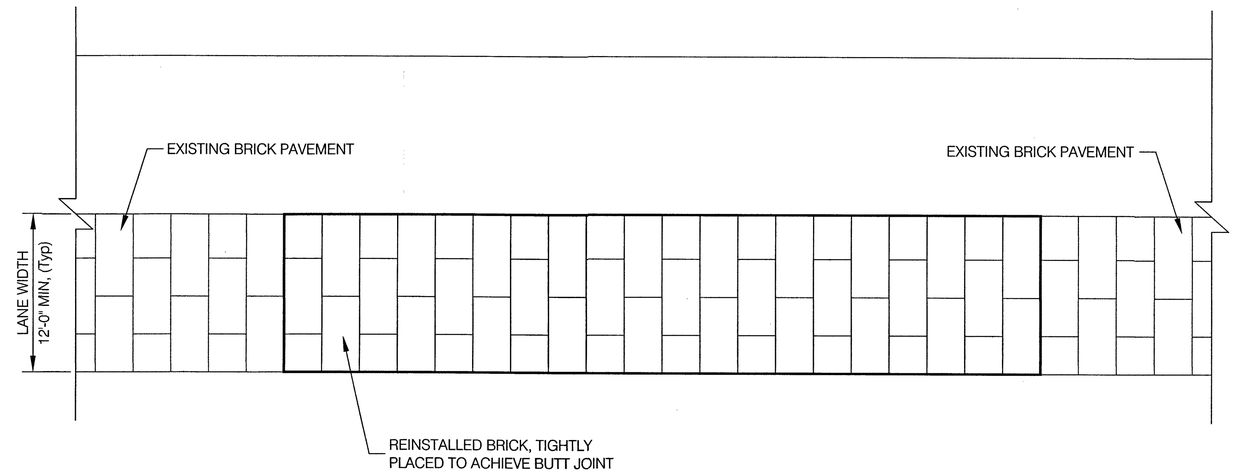

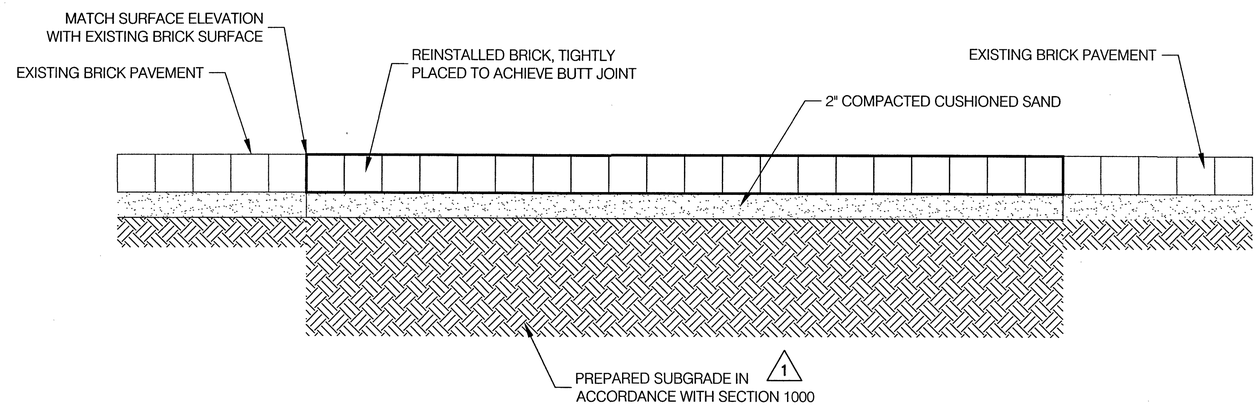

BRICK PAVEMENT REPAIR DETAIL

NOTES

1. REMOVAL LIMITS PER ENGINEER.
2. VIBRATE BRICK IN PLACE WITH PLATE VIBRATOR.
3. BRUSH DRY CUSHION SAND OVER BRICK SURFACE AND VIBRATE.
4. MIST BRICK SURFACE WITH WATER AFTER VIBRATION.

1	6/3/2015	DESIGN ENGINEER	CITY OF OMAHA PUBLIC WORKS DEPARTMENT	
		CITY ENGINEER	PAVEMENT REPAIR	STANDARD PLATE 1000-03 — SHEET 3/4
				ISSUE DATE: ... DECEMBER 10, 2013

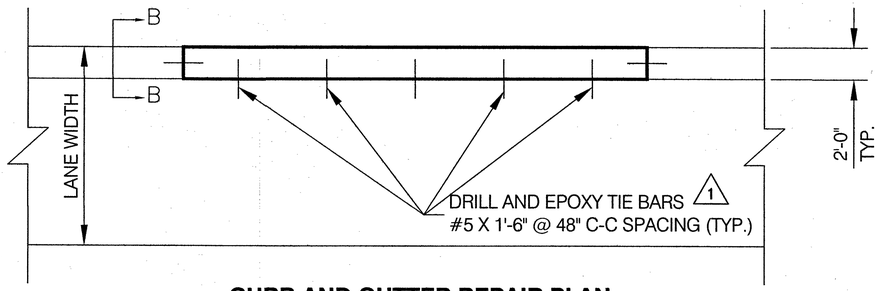

CURB AND GUTTER REPAIR PLAN

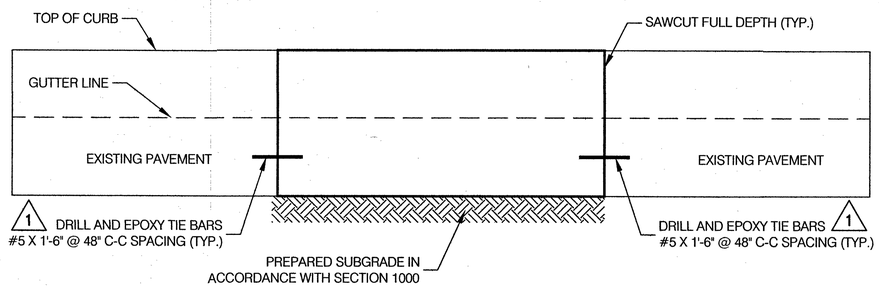

CURB AND GUTTER REPAIR SECTION

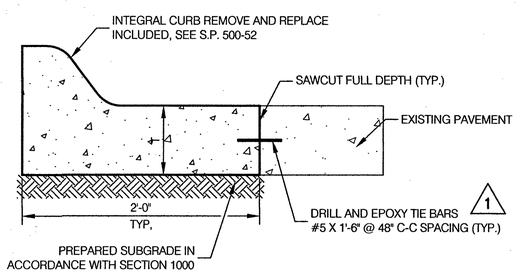

CURB AND GUTTER REPAIR SECTION
SECTION B-B (OPTION 1)

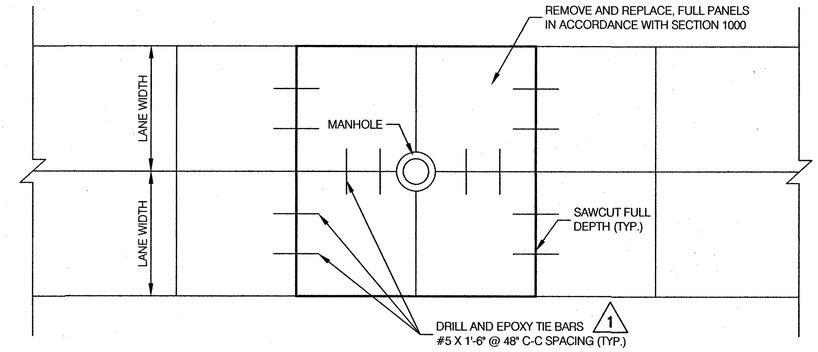

MANHOLE ADJUSTMENT IN RIDGID PAVEMENT

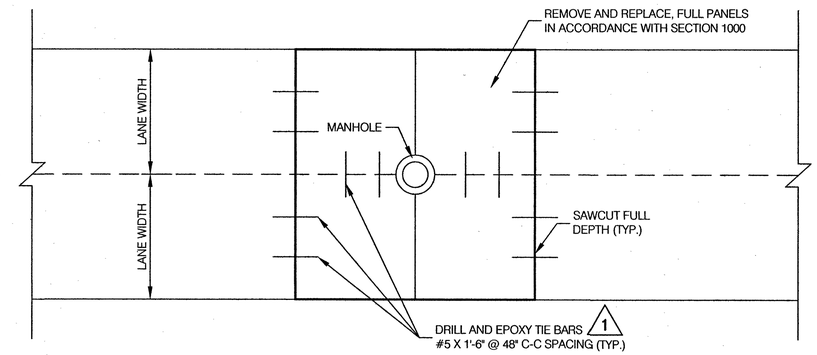

MANHOLE ADJUSTMENT IN ASPHALT SURFACE PAVEMENT

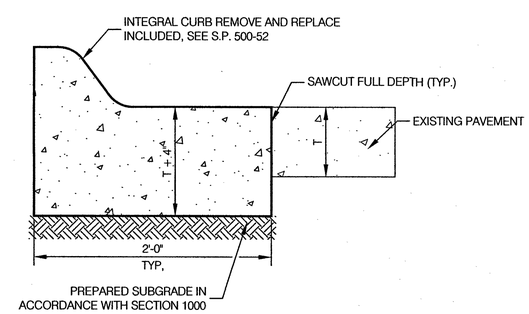

CURB AND GUTTER REPAIR SECTION
SECTION B-B (OPTION 2)

1	6/19/2015	DESIGN ENGINEER CITY ENGINEER	CITY OF OMAHA PUBLIC WORKS DEPARTMENT PAVEMENT REPAIR	STANDARD PLATE 1000-03 SHEET 4/4 ISSUE DATE: ... DECEMBER 10, 2013

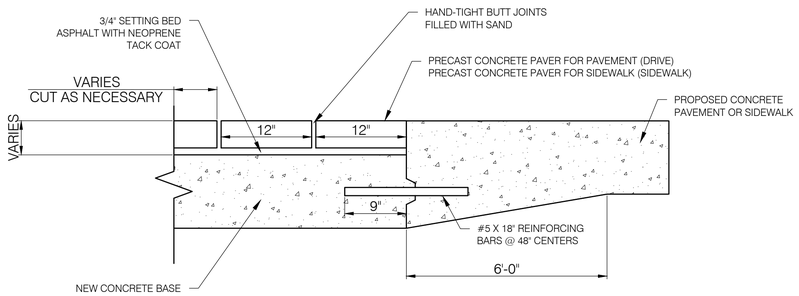

TYPICAL PRECAST CONCRETE PAVER SECTION KEYED AND TIED JOINT

NO SCALE

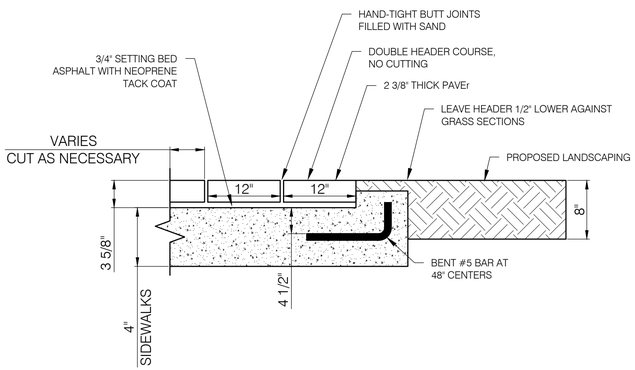

TYPICAL SECTION AGAINST LANDSCAPE KEYED AND TIED JOINT

NO SCALE

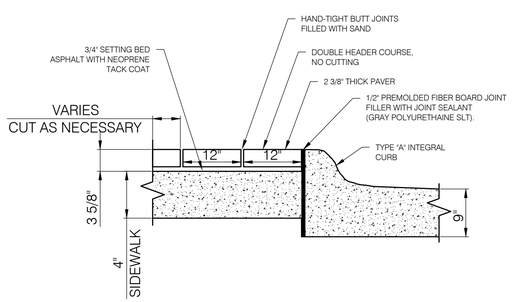

TYPICAL SECTION AGAINST PAVEMENT KEYED AND TIED JOINT

NO SCALE

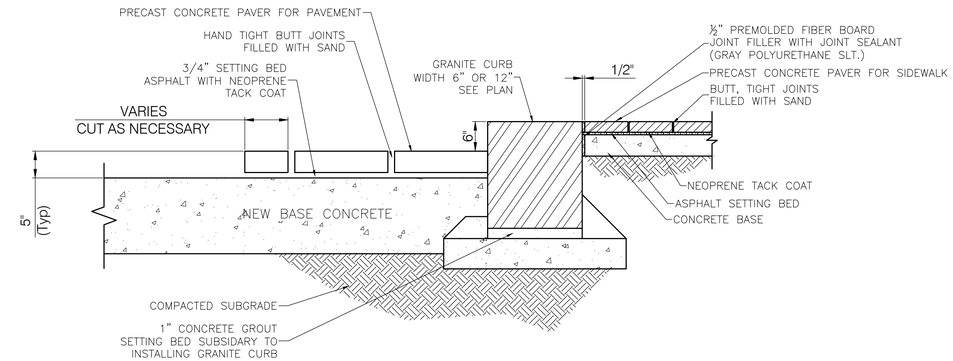

TYPICAL SECTION - GRANITE CURB

NO SCALE

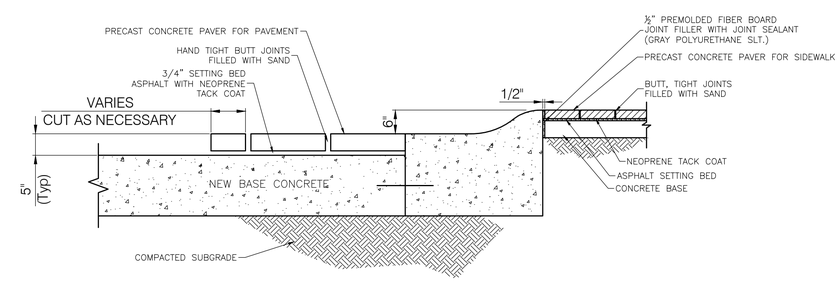

TYPICAL SECTION - TYPE A CURB

NO SCALE

		DESIGN ENGINEER	CITY OF OMAHA PUBLIC WORKS DEPARTMENT
		CITY ENGINEER	PRECAST CONCRETE PAVER
			STANDARD PLATE 1100-01 — SHEET 1/1
			ISSUE DATE: ... DECEMBER 10, 2013

L:\Engineering\011\0200\DOCUMENTS\Standard Plates\ACAD Files from City\REVISED PLATE NUMBERS\PLT-1100-01.dwg, 2/19/2014 11:52:29 AM, rickk, 11.0377A, Lamp, Rynearson & Associates