CITY OF OMAHA

PUBLIC WORKS DEPARTMENT

STANDARD PLATES

CITY OF OMAHA
STANDARD PLATE INDEX

ORIGINAL STANDARD PLATES

320 ..... SIDEWALK CONSTUCTION DETAILS
321 ..... SIDEWALK LOCATION STANDARD
401 ..... STEP DETAILS
684 ..... CURB WALL DETAIL
703 ..... TYPE "A" SINGLE INLET
704 ..... TYPE "AA" DOUBLE INLET
705 ..... TYPE "AA" DOUBLE INLET (ALTERNATE)
707 ..... TYPE "SADDLE CREEK" SINGLE INLET
708 ..... MANHOLE DETAIL
710 ..... TYPE "C" DOUBLE INLET
712 ..... TYPE "B-B" SINGLE BASIN GRATE INLET
715 ..... TYPICAL RISER DETAIL
716 ..... RING AND BEEHIVE GRATE
717 ..... AREA INLETS (2 SHEETS)
721 ..... CURB INLETS (5 SHEETS)
723 ..... CONCRETE COLLAR - SEWER TAP
724 ..... PIPE PLUG DETAIL
725 ..... SANITARY SEWER WATER MAIN CROSSING
739 ..... SANITARY MANHOLE

SECTION 1 ..... PAVEMENTS AND APPURTENCES

1-01 .....CONCRETE ALLEY PAVEMENT
1-10 ..... 25'.....RESIDENTIAL CONCRETE PAVEMENT
1-12 ..... 25'.....RESIDENTIAL ASPHALTIC CONCRETE PAVEMENTS
1-13 ..... 25'.....RESIDENTIAL GRADING SECTIONS WITHOUT SIDEWALK
1-16 ..... 30'.....INDUSTRIAL CONCRETE PAVEMENT
1-20 ..... 38'.....3 LANE CONCRETE PAVEMENT
1-30 ..... 50'.....4 LANE CONCRETE PAVEMENT
1-32 ..... 62'.....5 LANE CONCRETE PAVEMENT
1-40 ..... 66'.....4 LANE DIVIDED CONCRETE PAVEMENT
1-42 ..... 68'.....4 LANE DIVIDED CONCRETE PAVEMENT
1-50 ..... CONCRETE PAVEMENT JOINT DETAILS
1-52 ..... CONCRETE CURB DETAILS
1-54 ..... CONCRETE MEDIAN DETAILS ..... (2 SHEETS)
1-56 ..... GRANITE CURB DETAILS
1-60 ..... MISCELLANEOUS CONCRETE PAVEMENT DETAILS
1-70 ..... CONCRETE DRIVEWAY DETAILS
1-82 ..... CONCRETE CURB RAMP DETAILS .... (4 SHEETS)

SECTION 2.....BITUMINOUS RESURFACING

2-01 ..... PAVEMENT WIDENING, REPAIR AND SURFACING DETAILS
2-10R1 ..... ASPHALT RESURFACING ADJUSTMENT DETAILS

SECTION 3.....SEWERS

3-01 ..... SEWER BEDDING DETAILS
3-18 ..... SAMPLING MANHOLES .... (3 SHEETS)
3-30 ..... REINFORCED CONCRETE CURB INLET COVER
3-70 ..... FLARED END SECTIONS AND BAR GRATES
3-72 ..... TIMBER PILE PIPE SUPPORT
3-75 ..... REINFORCED CONCRETE IMPACT STILLING BASIN
3-83 ..... REINFORCED CONCRETE PIPE COUPLERS
3-90 ..... CAST IRON MANHOLE RINGS AND COVERS, MANHOLE STEPS .... (2 SHEETS)
3-92 ..... TYPE "A" - FLAT CAST IRON GRATE AND FRAME
3-93 ..... TYPE "V" - CAST IRON VANEGRATE, FRAME AND CURB INLET
3-94 ..... TYPE "SC" - CAST IRON GRATE AND FRAME

SECTION 4.....STRUCTURAL

4-01 ..... CHAIN LINK FENCES AND CHAIN LINK FENCE GATE DETAILS

SECTION 5.....EROSION CONTROL-LANDSCAPING

5-01 ..... GEOTEXTILE FABRIC SILT FENCE
5-02 ..... HAY BALE SILT CHECK
5-10 ..... CHANNEL AND SLOPE SOIL STABILIZATION MAT DETAILS

SECTION 6.....TRAFFIC SIGNALIZATION

6-01R1 ..... PULL BOX DETAILS
6-04 ..... CONCRETE PAD DETAIL FOR PAD MOUNTED CONTROLLER CABINET
6-10 ..... PEDESTAL POLE DETAILS
6-20 ..... MAST ARM POLE DETAILS
6-22 ..... MAST ARM POLE FOUNDATION DETAILS
6-23 ..... MAST ARM TRANSFORMER BASE DETAILS
6-24 ..... MAST ARM SIGNAL MOUNTING
6-30 ..... WOOD POLE SPAN WIRE DETAILS .... (2 SHEETS)
6-32 ..... SPAN WIRE MOUNTING DETAILS
6-40 ..... POLE BRACKET INSTALLATION DETAILS
6-50 ..... STREET LIGHT POLE DETAILS
6-60 ..... STANDARD SIGNAL FACE ARRANGEMENTS
6-70 ..... INDUCTIVE LOOP DETECTORS
6-72 ..... MAGNETIC DETECTOR INSTALLATION DETAIL
6-74 ..... STANDARD TRAFFIC SIGNAL WIRING CODES
6-76R1 ..... ELECTRIC SERVICE PEDESTAL
6-78 ..... POWER SERVICE DETAILS
6-80 ..... STREET NAME SIGN LAYOUTS .... (2 SHEETS)
6-82 ..... OVERHEAD MOUNTED SIGNS
6-84 ..... POST MOUNTED SIGNS
6-85 ..... SIGN POST ANCHORING SYSTEMS
6-88 ..... CONSTRUCTION SIGN
6-90 ..... SPEED HUMP DETAILS ..... (2 SHEETS)
6-91..... SPEED TABLE DETAILS ..... (3 SHEETS)

ISSUE DATE: MARCH 08, 2011

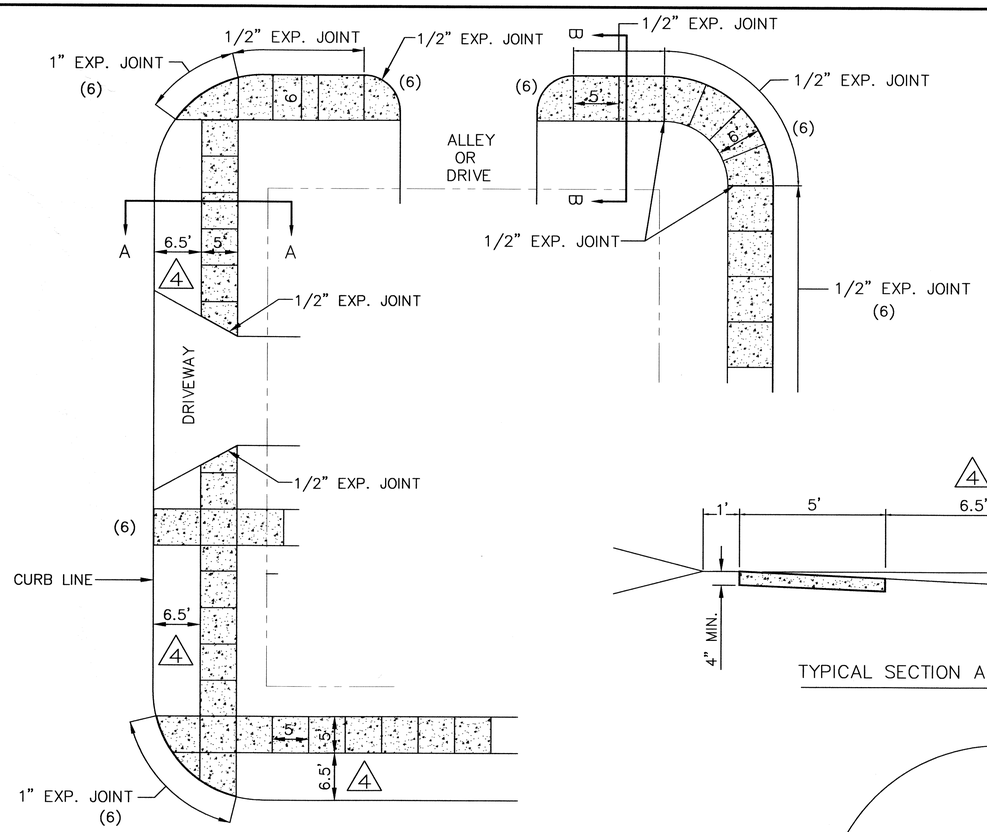

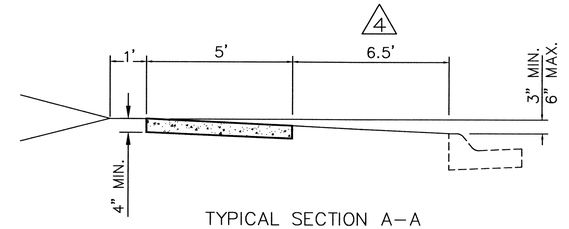

TYPICAL SECTION A–A

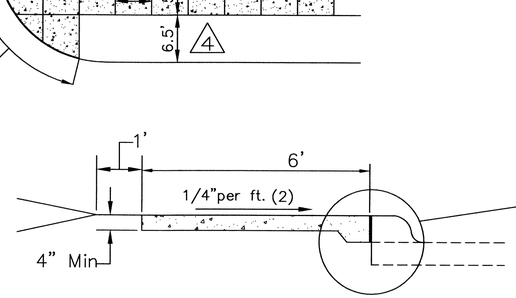

TYPICAL SECTION B–B

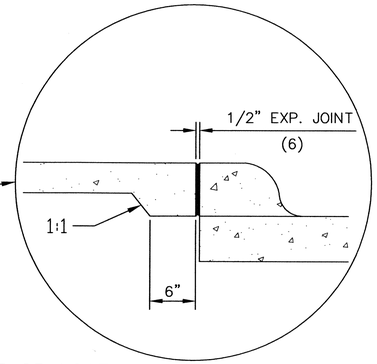

CONCRETE FOR SIDEWALKS SHALL BE SG 6.5 AE OR L6AE.

3 NOTES:

1. SIDEWALK SLOPE MAY BE VARIED TO SUIT EXISTING CONDITIONS. RECOMMENDED MINIMUM AND MAXIMUM TO BE ¼"/FOOT AND ½"/FOOT, RESPECTIVELY. VARIATIONS TO SUIT EXTREME CONDITIONS TO BE AS DIRECTED BY THE ENGINEER.
2. ALL SIDEWALKS FIVE FEET (5') OR MORE IN WIDTH SHALL BE SCORED IN PANELS NO GREATER THAN FIVE FEET (5') IN LENGTH.
3. NO SIDEWALK REPAIR SHALL BE LESS THAN ONE COMPLETE PANEL.
4. USE SEALING FILLER, HOT POURED TYPE, ON ALL EXPANSION JOINTS.
5. WHEELCHAIR RAMPS, SEE STANDARD PLATE I–82, SHALL BE CONSTRUCTED AT ALL POINTS OF ENTRY.
6. CONTRACTION JOINTS SHALL BE SCORED TO A MINIMUM DEPTH OF T/4, WHERE T IS THE SIDEWALK THICKNESS.
7. CITY INSPECTION IS REQUIRED AFTER SIDEWALK IS FORMED AND BEFORE PLACING CONCRETE. PHONE 444–5220 FOR INSPECTOR.

4 REVISION 02/06/2009	DESIGN ENGINEER	CITY OF OMAHA PUBLIC WORKS DEPARTMENT	
3 REVISION 02/01/2008		SIDEWALK CONSTRUCTION DETAILS	STANDARD PLATE 320
2 REVISION 01/04/1986	CITY ENGINEER		SHEET 1/1
			ISSUE DATE: ... APRIL 1, 1983

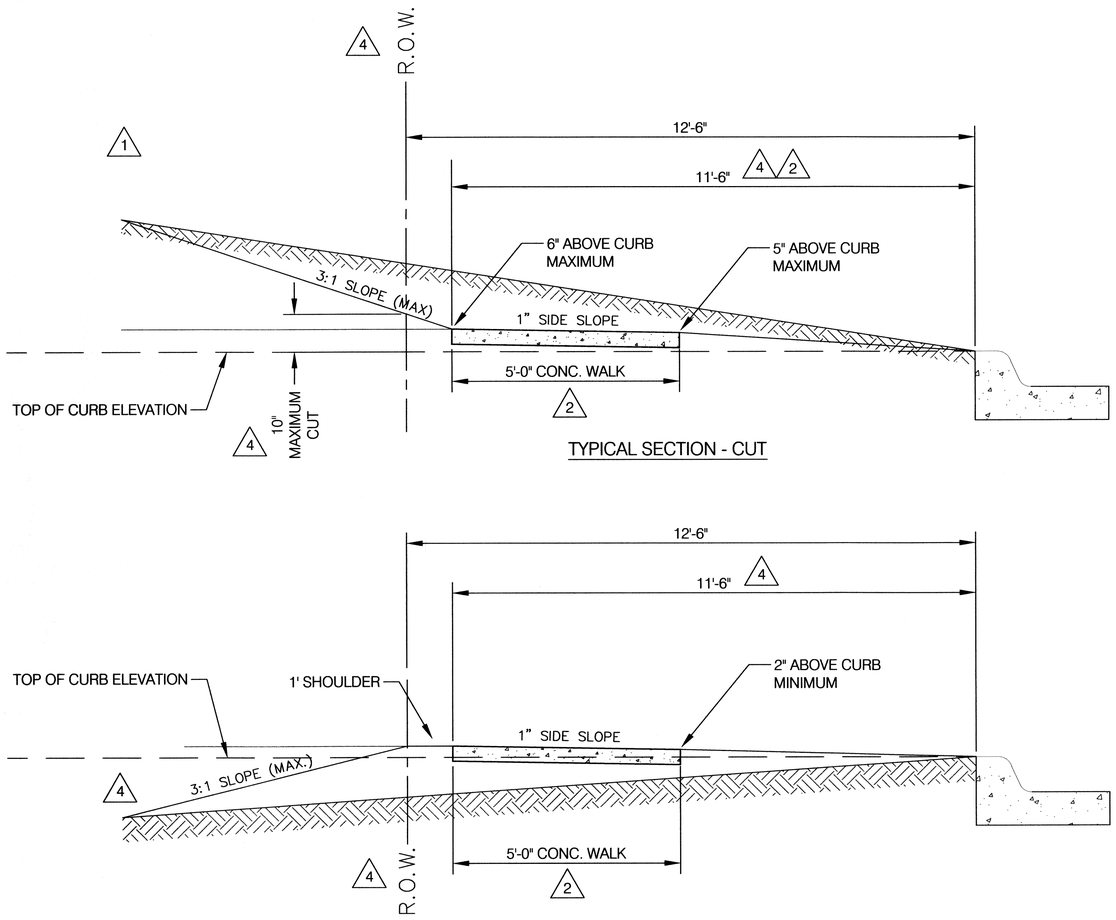

TYPICAL SECTION - CUT

TYPICAL SECTION - FILL

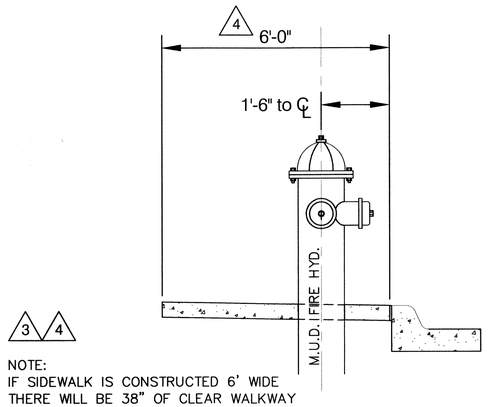

3 4

NOTE:
IF SIDEWALK IS CONSTRUCTED 6' WIDE
THERE WILL BE 38" OF CLEAR WALKWAY

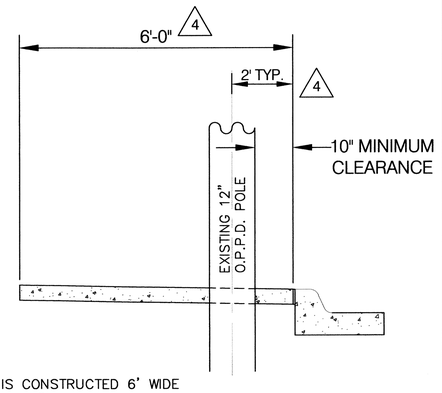

2

NOTE:
IF SIDEWALK IS CONSTRUCTED 6' WIDE
THERE WILL BE 38" OF CLEAR WALKWAY

DETAIL SHOWING UTILITY PLACEMENT

4	REVISION 02/12/2009
3	REVISION 04/07/2008
2	REVISION 02/01/2008
1	REVISION 03/01/1970

DESIGN ENGINEER

CITY ENGINEER

CITY OF OMAHA PUBLIC WORKS DEPARTMENT

SIDEWALK LOCATION PLATE

STANDARD PLATE 321

SHEET 1 / 1

ISSUE DATE: ..... NOVEMBER 13, 1959

WALL STEP DETAIL

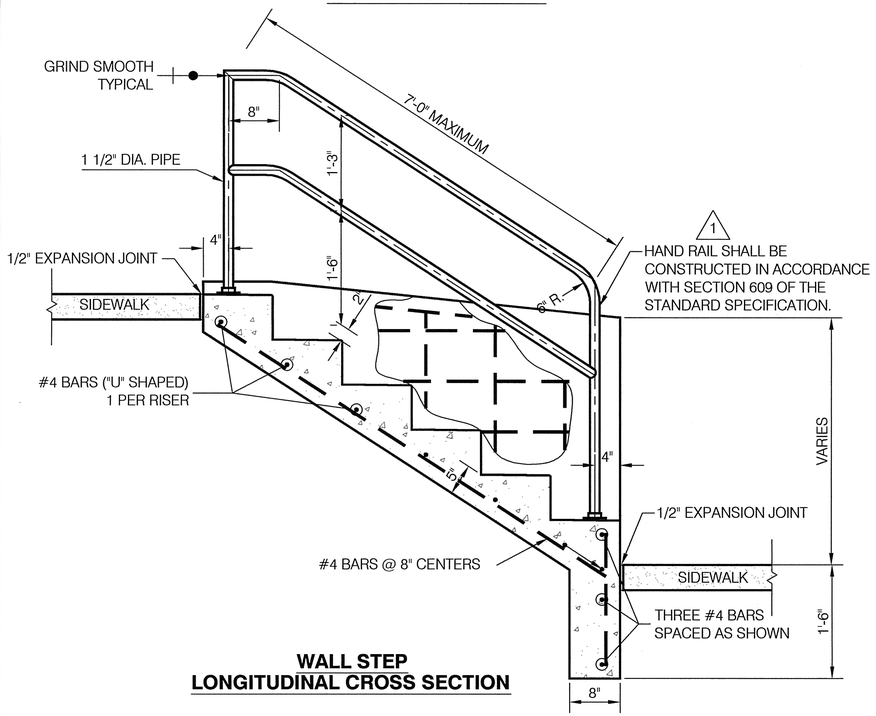

WALL STEP LONGITUDINAL CROSS SECTION

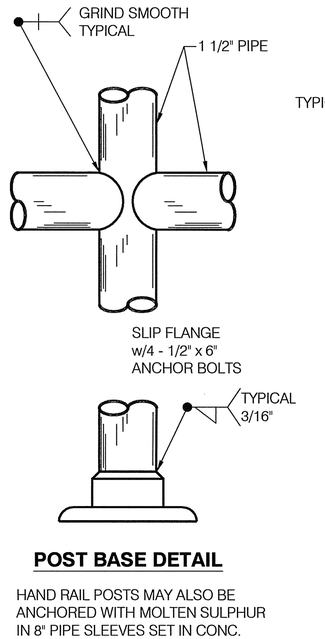

POST BASE DETAIL

HAND RAIL POSTS MAY ALSO BE ANCHORED WITH MOLTEN SULPHUR IN 8" PIPE SLEEVES SET IN CONC.

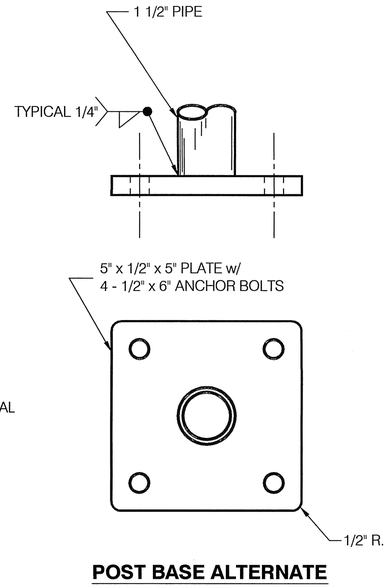

POST BASE ALTERNATE

TERRACE STEP DETAIL

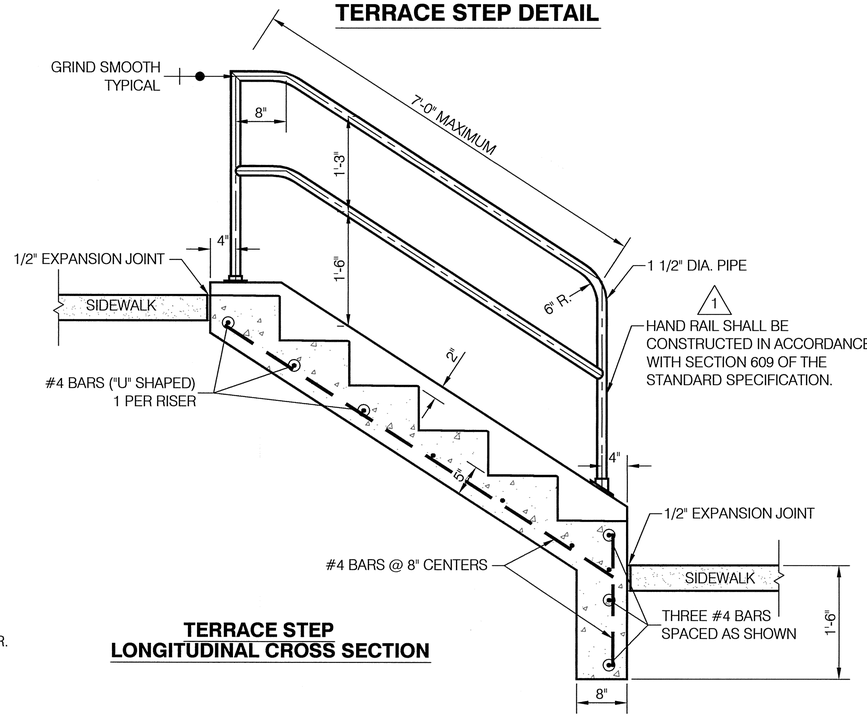

TERRACE STEP LONGITUDINAL CROSS SECTION

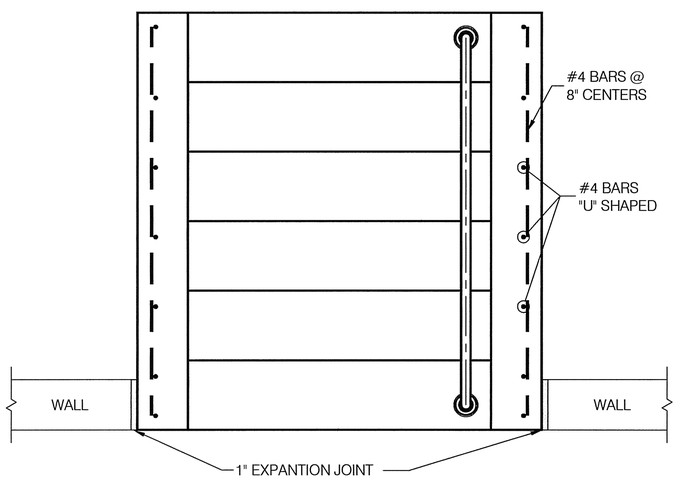

WALL STEP PLAN VIEW

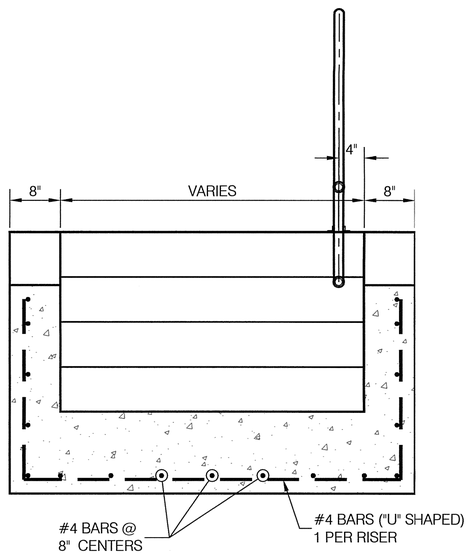

WALL STEP TYPICAL CROSS SECTION

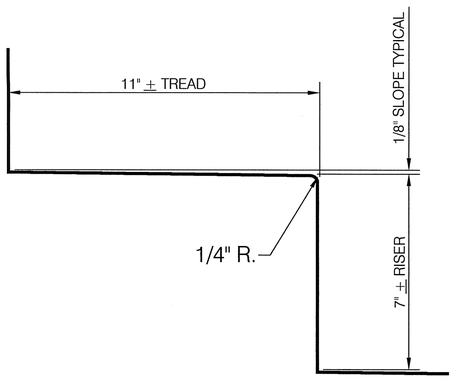

TYPICAL RISER SECTION

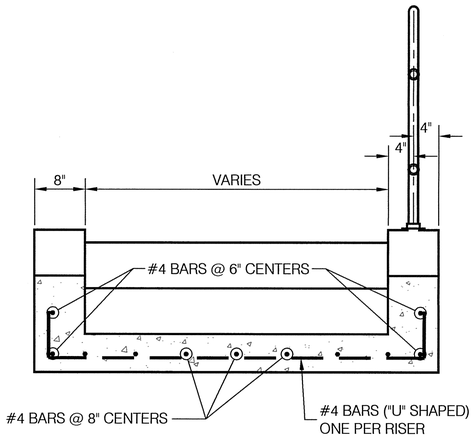

TERRACE STEP TYPICAL CROSS SECTION

NOTES

1. CONCRETE SHALL BE SG 65 AE OR L6AE.
2. WIDTH OF STEPS SHALL BE AS SHOWN ON THE PLANS OR AS DIRECTED BY THE ENGINEER
3. TREADS SHALL BE GIVEN A WOOD FLOAT FINISH AND ALL OTHER EXPOSED CONCRETE SHALL BE FINISHED SMOOTH.
4. ALL EXPOSED CONCRETE EDGES SHALL BE CHAMFERED.
5. REINFORCING STEEL SHALL BE PLACED AS SHOWN WITH 2" (MINIMUM) CLEARANCE.
6. STEPS SHALL BE LIMITED TO 18 RISERS PER FLIGNT.
7. ALL STEPS OF FOUR RISERS OR MORE SHALL REQUIRE A HAND RAIL AS SHOWN. (TO BE INCLUDED IN STEP COST)
8. HAND RAIL INTERMEDIATE POSTS, IF REQUIRED, SHALL BE EQUALLY SPACED BETWEEN END POSTS.

1	REVISION 02/01/2008	Kyle R. Fath DESIGN ENGINEER Charles Krajewski CITY ENGINEER	CITY OF OMAHA PUBLIC WORKS DEPARTMENT **WALL STEP DETAILS** STANDARD PLATE **401** SHEET 1/1 ISSUE DATE: ... OCTOBER 9, 2002

CURB WALL AND PAVEMENT

4 THE OUTSIDE FACE OF ALL WALLS SHALL HAVE A HORIZONTAL SIMULATED BRICK PATTERN

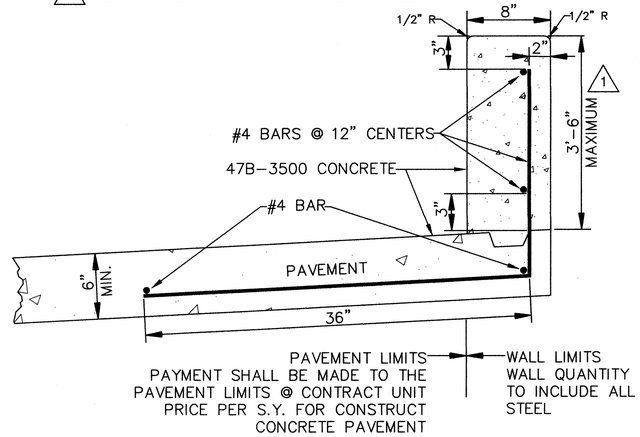

WALL SITUATION DETAIL

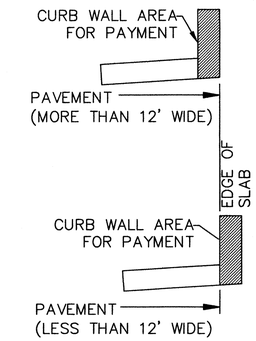

SIDEWALK CURBWALL 1

2 SIDEWALK PAY ITEM SQ. FT.
CURBWALL PAY ITEM SQ. FT.

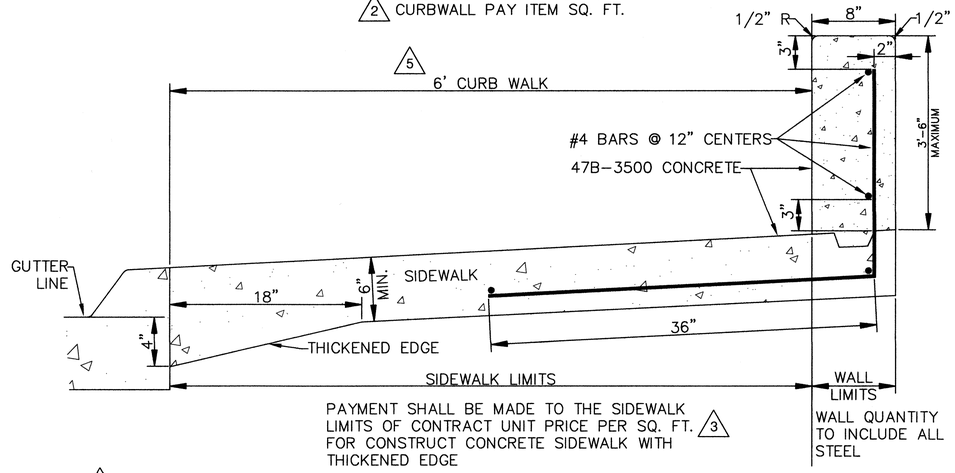

4 THE OUTSIDE FACE OF ALL WALLS SHALL HAVE A HORIZONTAL SIMULATED BRICK PATTERN.

NOTES:

1. ALL REINFORCING STEEL SHALL BE PLACED AS SHOWN WITH 2" (MINIMUM) CLEARANCE.
2. KEY WAY SHALL BE 1.5" X3.5" AND BEVELED AS SHOWN.
3. ALL WORK AND MATERIALS SHALL CONFORM TO SECTION 6:01 OF THE STANDARD SPECIFICATIONS EXCEPT AS FOLLOWS:
   a. SUBGRADE REQUIREMENTS NOT APPLICABLE.
   b. SEPARATION JOINTS SHALL BE PLACED IN LINE WITH EVERY SECOND TRANSVERSE JOINT IN THE ADJOINING SLAB USING THE SPECIFIED STEEL TEMPLATE.
   c. EXPANSION JOINTS IN THE ADJOINING PAVEMENT SHALL BE CARRIED CONTINUOUSLY THROUGH THE WALL.
   d. PAYMENT SHALL BE MADE AT THE CONTRACT UNIT PRICE PER SQ. FT. FOR CONSTRUCT CURB WALL

1	REVISION 03/1970	4	REVISION 03/1973	DESIGN ENGINEER 12/24/11 DATE	CITY OF OMAHA PUBLIC WORKS DEPARTMENT
2	REVISION 05/1971	5	REVISION 12/2011	CITY ENGINEER 1/3/12 DATE	CURB WALL DETAIL
3	REVISION 09/1971				STANDARD PLATE 684 SHEET 1/1
					ISSUE DATE: ... MARCH 12, 1970

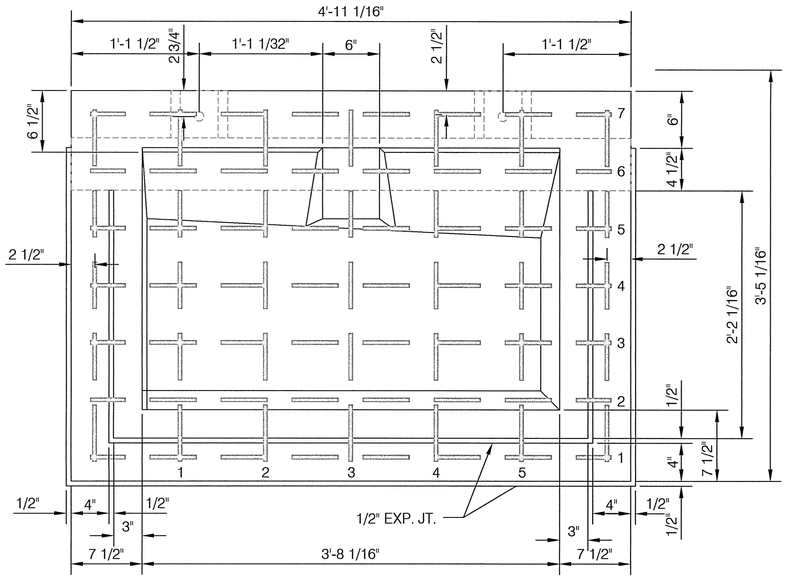

PLAN

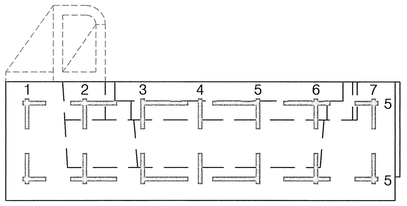

END

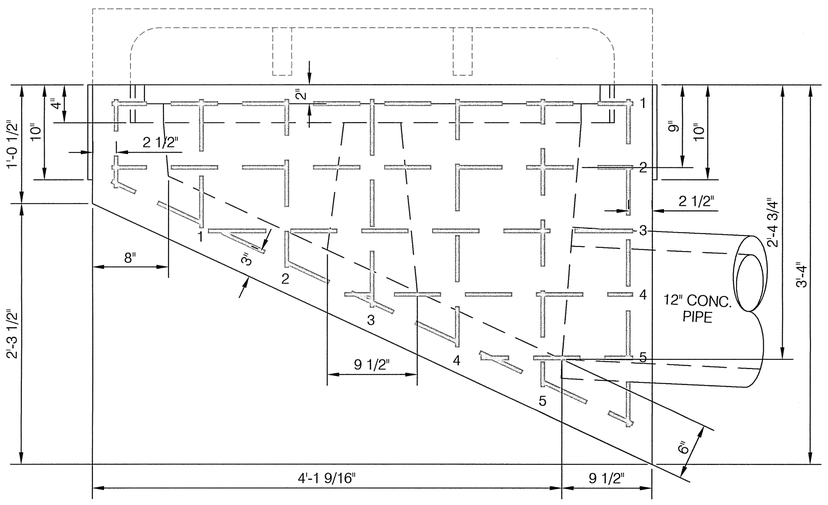

ELEVATION

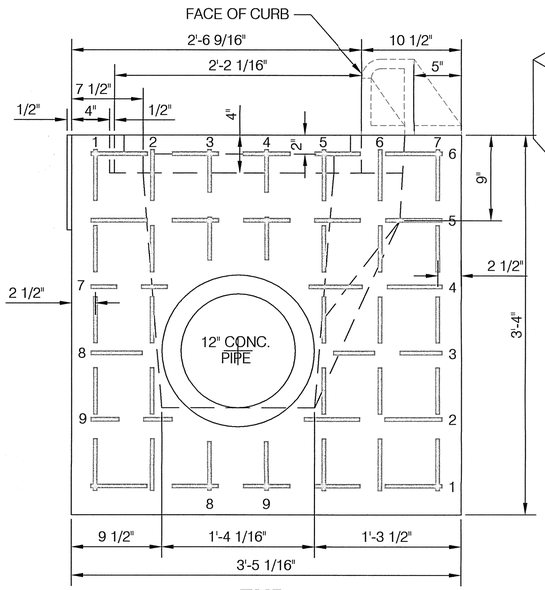

END

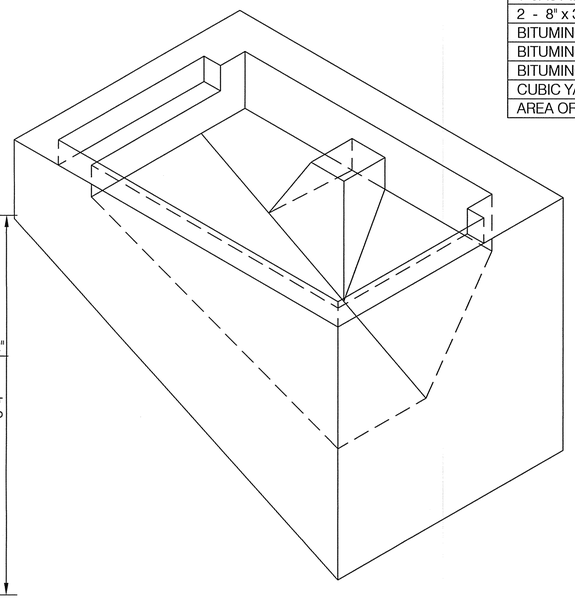

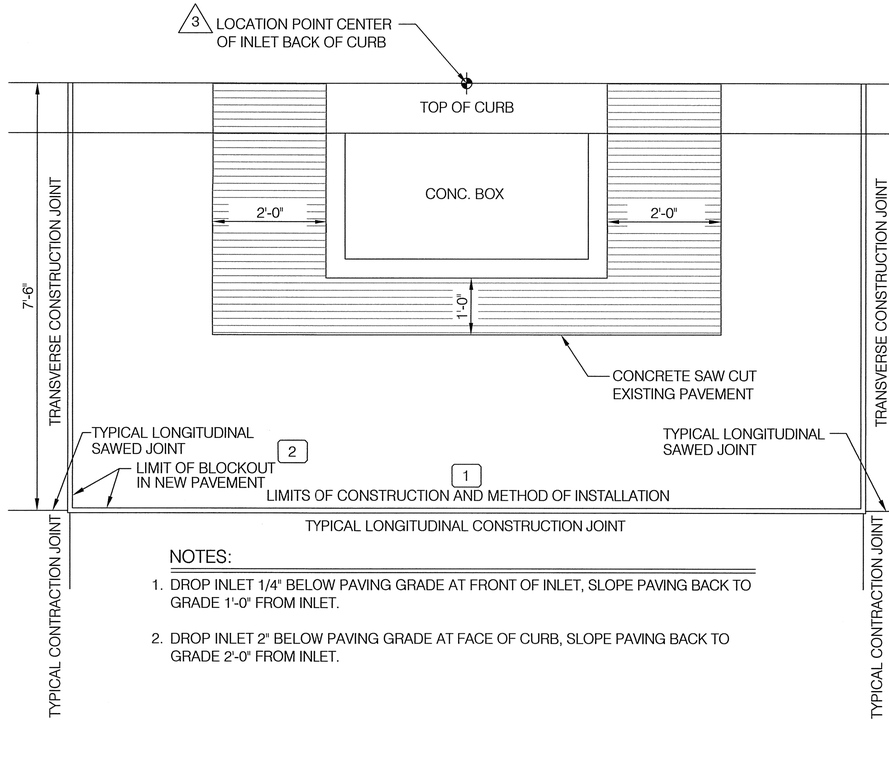

NOTES:

1. DROP INLET 1/4" BELOW PAVING GRADE AT FRONT OF INLET, SLOPE PAVING BACK TO GRADE 1'-0" FROM INLET.
2. DROP INLET 2" BELOW PAVING GRADE AT FACE OF CURB, SLOPE PAVING BACK TO GRADE 2'-0" FROM INLET.

APPROXIMATE QUANTITIES

REINFORCING STEEL

BAR	NO.	SIZE	LENGTH	DESCRIPTION	SPACED
1 to 5	5	NO. 4	3'-0"	TRANSVERSE FOOTING	9" CC
1 to 7	7	NO. 4	4'-6"	LONGITUDINAL FOOTING	6" CC
1	2	NO. 4	4'-6"	LONGITUDINAL SIDE WALL	6 5/8"
2	2	NO. 4	4'-6"	LONGITUDINAL SIDE WALL	6 5/8"
3	2	NO. 4	3'-8"	LONGITUDINAL SIDE WALL	6 5/8"
4	2	NO. 4	2'-5"	LONGITUDINAL SIDE WALL	6 5/8"
5	2	NO. 4	1'-3"	LONGITUDINAL SIDE WALL	6 5/8"
1	2	NO. 4	1'-1"	VERTICAL SIDE WALLS	9" CC
2	2	NO. 4	1'-5"	VERTICAL SIDE WALLS	9" CC
3	2	NO. 4	1'-9"	VERTICAL SIDE WALLS	9" CC
4	2	NO. 4	2'-1"	VERTICAL SIDE WALLS	9" CC
5	2	NO. 4	2'-6"	VERTICAL SIDE WALLS	9" CC
1	1	NO. 4	2'-11"	VERTICAL END WALLS	6" CC
2	1	NO. 4	2'-11"	VERTICAL END WALLS	6" CC
3	1	NO. 4	1'-2"	VERTICAL END WALLS	6" CC
4	1	NO. 4	1'-2"	VERTICAL END WALLS	6" CC
5	1	NO. 4	2'-11"	VERTICAL END WALLS	6" CC
6	1	NO. 4	2'-11"	VERTICAL END WALLS	6" CC
7	1	NO. 4	2'-11"	VERTICAL END WALLS	6" CC
8	1	NO. 4	0'-6"	VERTICAL END WALLS	6" CC
9	1	NO. 4	0'-6"	VERTICAL END WALLS	6" CC
1	1	NO. 4	3'-0"	LONGITUDINAL END WALLS	6 5/8"
2	1	NO. 4	1'-5"	LONGITUDINAL END WALLS	6 5/8"
3	1	NO. 4	1'-2"	LONGITUDINAL END WALLS	6 5/8"
4	1	NO. 4	1'-7"	LONGITUDINAL END WALLS	6 5/8"
5	1	NO. 4	3'-0"	LONGITUDINAL END WALLS	6 5/8"
6	1	NO. 4	3'-0"	LONGITUDINAL END WALLS	6 5/8"
7	1	NO. 4	1'-2"	LONGITUDINAL END WALLS	6 5/8"
8	1	NO. 4	0'-7"	LONGITUDINAL END WALLS	6 5/8"
9	1	NO. 4	0'-10"	LONGITUDINAL END WALLS	6 5/8"
1 to 7	7	NO. 4	0'-9"	VERTICAL END WALL	6" CC
1&2	2	NO. 4	3'-0"	LONGITUDINAL END WALL	6" CC
				TOTAL LENGTH 141.67 FT.	
				TOTAL WEIGHT 94.92 LBS.	

1 CAST IRON GRATE	APPROX. 365 LBS.
1 CAST IRON FRAME	APPROX. 292 LBS.
1 CAST IRON CURB INLET	APPROX. 290 LBS.
2 - 8" x 3/4" ANCHOR BOLTS W/3/4" WASHERS & HEX NUTS	
BITUMINOUS EXP. JT. MATERIAL 1/2" x 10" x 11' (PAVING DEPTH)	
BITUMINOUS EXP. JT. MATERIAL 1/2" x 4" x 8'-9" (FRAME DEPTH)	
BITUMINOUS EXP. JT. MATERIAL 1/2" x 8" x 11" (CURB DEPTH)	
CUBIC YARDS CONCRETE	.9 C.Y.
AREA OF BLOCKOUT (EXISTING PAVEMENT ONLY)	4.4 S.Y.

1 NOTES:

3 1. CONCRETE SHALL BE CLASS L6AE.

2. REINFORCING STEEL SHALL BE DEFORMED BARS.

3. REINFORCING BARS WILL BE TIE WIRED AT ALL POINTS OF INTERSECTION

3 4. STANDARD DRAWING OF CAST IRON CURB INLET AND FLAT GRATE AND FRAME. STANDARD PLATE NO. 3-92.

5. INLET PIPE MAY BE INSTALLED AT END OR EITHER SIDE.

3	REVISION 01/17/2008
2	REVISION 02/01/1970
1	REVISION 01/01/1968

DESIGN ENGINEER

CITY ENGINEER

CITY OF OMAHA PUBLIC WORKS DEPARTMENT

GRATE INLET TYPE "A"

STANDARD PLATE **703**

SHEET 1/1

ISSUE DATE: ... NOVEMBER 30, 1998

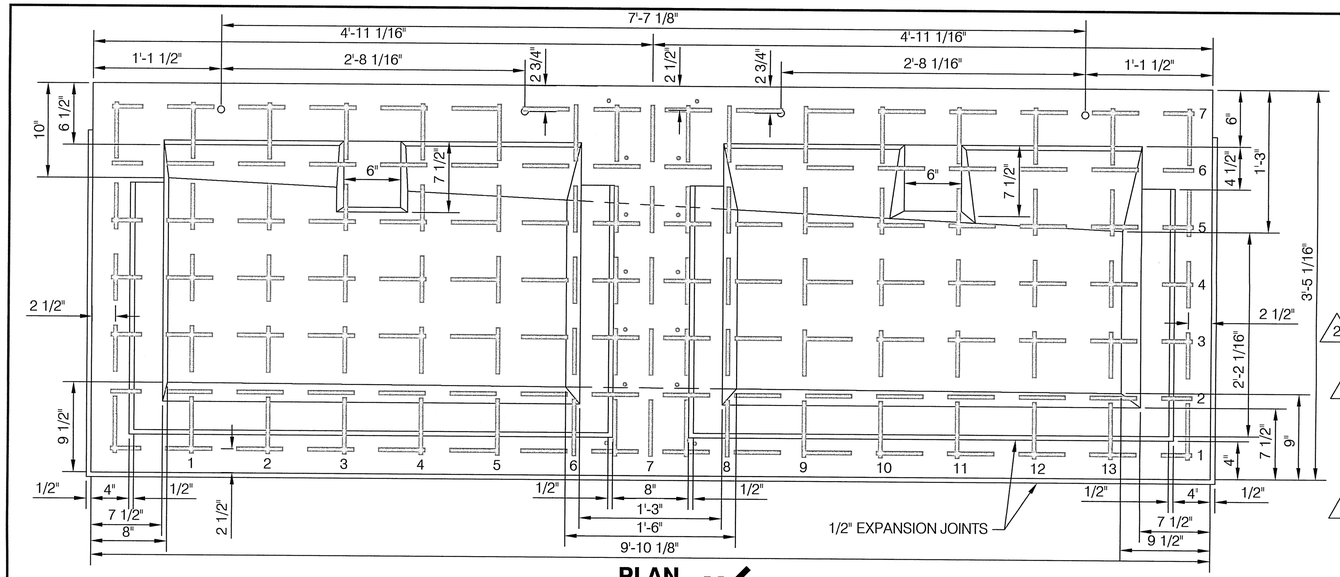

PLAN

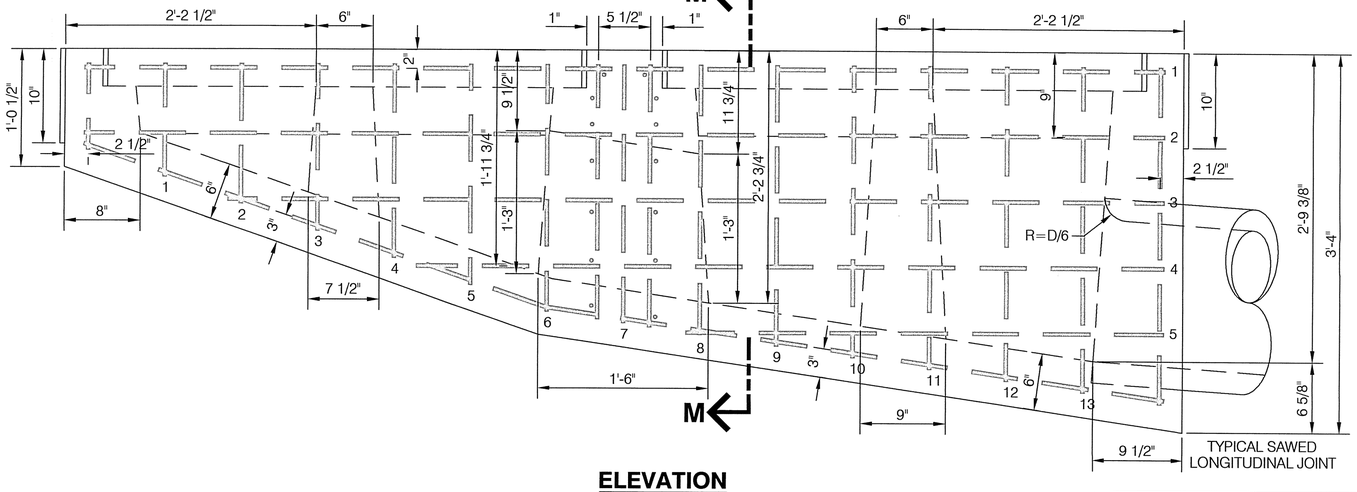

ELEVATION

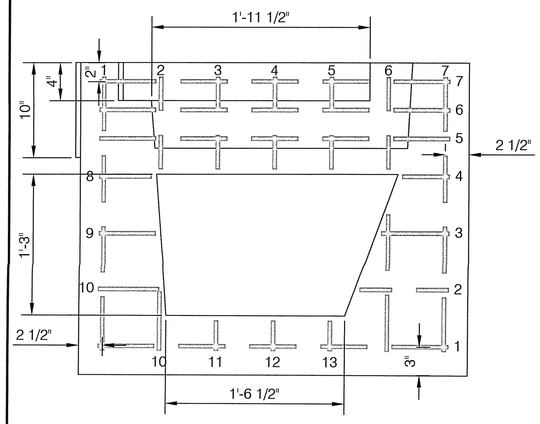

SECTION "M-M"

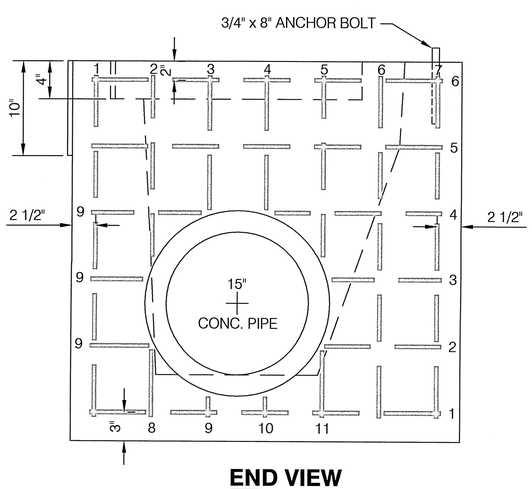

END VIEW

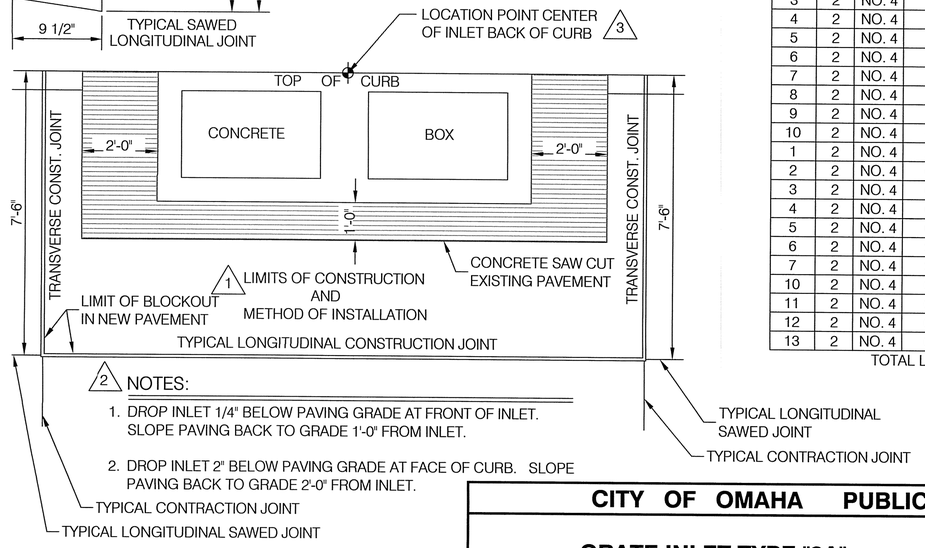

2 CAST IRON GRATE	APPROX. 365 LBS. EA. = 730 LBS.
2 CAST IRON FRAME	APPROX. 292 LBS. EA. = 584 LBS.
2 CAST IRON CURB INLET	APPROX. 290 LBS. EA. = 580 LBS.
4 - 8" x 3/4" ANCHOR BOLTS W/3/4" WASHERS & HEX NUTS	
BITUMINOUS EXP. JT. MATERIAL 1/2" x 10" x 16'-0" (PAVING DEPTH)	
BITUMINOUS EXP. JT. MATERIAL 1/2" x 4" x 16'-0" (FRAME DEPTH)	
BITUMINOUS EXP. JT. MATERIAL 1/2" x 8" x 0'-11" (CURB DEPTH)	
CUBIC YARDS CONCRETE	2.5 C.Y.
AREA OF BLOCK-OUT (EXISTING PAVEMENT ONLY)	6.8 S.Y.

2

1 NOTES:

3 1. CONCRETE SHALL BE CLASS L6AE.

2. REINFORCING STEEL SHALL BE DEFORMED BARS.

3. REINFORCING BARS WILL BE TIE WIRED AT ALL POINTS OF INTERSECTION

3 4. STANDARD DRAWING OF CAST IRON CURB INLET AND FLAT GRATE AND FRAME. SEE STANDARD PLATE NO. 3-92.

5. INLET PIPE MAY BE INSTALLED AT END OR EITHER SIDE.

2 NOTES:

1. DROP INLET 1/4" BELOW PAVING GRADE AT FRONT OF INLET. SLOPE PAVING BACK TO GRADE 1'-0" FROM INLET.

2. DROP INLET 2" BELOW PAVING GRADE AT FACE OF CURB. SLOPE PAVING BACK TO GRADE 2'-0" FROM INLET.

APPROXIMATE QUANTITIES

REINFORCING STEEL

BAR	NO.	SIZE	LENGTH	DESCRIPTION	SPACED
1to13	13	NO. 4	3'-1/4"	TRANSVERSE FOOTING	8 1/16"
1 to 7	7	NO. 4	9'-9"	LONGITUDINAL FOOTING	6" CC
1	2	NO. 4	0'-11 1/4"	VERTICAL SIDE WALLS	8 1/16"
2	2	NO. 4	1'-2 1/4"	VERTICAL SIDE WALLS	8 1/16"
3	2	NO. 4	1'-5 1/4"	VERTICAL SIDE WALLS	8 1/16"
4	2	NO. 4	1'-8"	VERTICAL SIDE WALLS	8 1/16"
5	2	NO. 4	1'-10 3/4"	VERTICAL SIDE WALLS	8 1/16"
6	2	NO. 4	2'-1 3/4"	VERTICAL SIDE WALLS	8 1/16"
7	2	NO. 4	2'-3 3/4"	VERTICAL SIDE WALLS	8 1/16"
8	2	NO. 4	2'-4"	VERTICAL SIDE WALLS	8 1/16"
9	2	NO. 4	2'-5 1/4"	VERTICAL SIDE WALLS	8 1/16"
10	2	NO. 4	2'-6 1/4"	VERTICAL SIDE WALLS	8 1/16"
11	2	NO. 4	2'-7 1/2"	VERTICAL SIDE WALLS	8 1/16"
12	2	NO. 4	2'-8 1/2"	VERTICAL SIDE WALLS	8 1/16"
13	2	NO. 4	2'-9 3/4"	VERTICAL SIDE WALLS	8 1/16"
1	2	NO. 4	9'-5 1/2"	LONGITUDINAL SIDE WALL	7" CC
2	2	NO. 4	9'-5 1/2"	LONGITUDINAL SIDE WALL	7" CC
3	2	NO. 4	8'-1"	LONGITUDINAL SIDE WALL	7" CC
4	2	NO. 4	6'-4 3/4"	LONGITUDINAL SIDE WALL	7" CC
5	2	NO. 4	3'-10 1/2"	LONGITUDINAL SIDE WALLS	7" CC
	7	NO. 4	0'-8 1/2"	VERTICAL END WALLS (BACK)	6" CC
	2	NO. 4	3'-1/4"	TRANSVERSE END WALLS (BACK)	7" CC
1	1	NO. 4	2'-11"	VERTICAL END WALLS (FRONT)	6" CC
2	1	NO. 4	1'-6 1/2"	VERTICAL END WALLS (FRONT)	6" CC
3	1	NO. 4	1'-1 1/2"	VERTICAL END WALLS (FRONT)	6" CC
4	1	NO. 4	1'-1 1/2"	VERTICAL END WALLS (FRONT)	6" CC
5	1	NO. 4	1'-6 3/4"	VERTICAL END WALLS (FRONT)	6" CC
6	1	NO. 4	2'-11"	VERTICAL END WALLS (FRONT)	6" CC
7	1	NO. 4	2'-11"	VERTICAL END WALLS (FRONT)	6" CC
8	1	NO. 4	0'-7 1/2"	VERTICAL END WALLS (FRONT)	6" CC
9	1	NO. 4	0'-2 1/2"	VERTICAL END WALLS (FRONT)	6" CC
10	1	NO. 4	0'-2 1/2"	VERTICAL END WALLS (FRONT)	6" CC
11	1	NO. 4	0'-7 1/2"	VERTICAL END WALLS (FRONT)	6" CC
1	2	NO. 4	3'-0"	LONGITUDINAL END WALLS (FRONT)	7" CC
2	1	NO. 4	1'-1/2"	LONGITUDINAL END WALLS (FRONT)	7" CC
3	1	NO. 4	0'-11 1/2"	LONGITUDINAL END WALLS (FRONT)	7" CC
4	1	NO. 4	1'-4 1/2"	LONGITUDINAL END WALLS (FRONT)	7" CC
5	1	NO. 4	3'-0"	LONGITUDINAL END WALLS (FRONT)	7" CC
6	1	NO. 4	3'-0"	LONGITUDINAL END WALLS (FRONT)	7" CC
7	1	NO. 4	0'-10 1/2"	LONGITUDINAL END WALLS (FRONT)	7" CC
8	1	NO. 4	0'-5 1/2"	LONGITUDINAL END WALLS (FRONT)	7" CC
9	1	NO. 4	0'-6 1/2"	LONGITUDINAL END WALLS (FRONT)	7" CC
1	2	NO. 4	3'-0"	LONGITUDINAL CENTER WALL	6" CC
2	2	NO. 4	0'-9"	LONGITUDINAL CENTER WALL	6" CC
3	2	NO. 4	0'-9"	LONGITUDINAL CENTER WALL	6" CC
4	2	NO. 4	0'-9"	LONGITUDINAL CENTER WALL	6" CC
5	2	NO. 4	3'-0"	LONGITUDINAL CENTER WALL	4" CC
6	2	NO. 4	3'-0"	LONGITUDINAL CENTER WALL	3" CC
7	2	NO. 4	3'-0"	LONGITUDINAL CENTER WALL	3" CC
8	2	NO. 4	0'-4 1/2"	LONGITUDINAL CENTER WALL	6" CC
9	2	NO. 4	0'-4 1/2"	LONGITUDINAL CENTER WALL	6" CC
10	2	NO. 4	0'-6 1/2"	LONGITUDINAL CENTER WALL	6" CC
1	2	NO. 4	2'-4 1/2"	VERTICAL CENTER WALL	6" CC
2	2	NO. 4	0'-7"	VERTICAL CENTER WALL	6" CC
3	2	NO. 4	0'-7"	VERTICAL CENTER WALL	6" CC
4	2	NO. 4	0'-7"	VERTICAL CENTER WALL	6" CC
5	2	NO. 4	0'-7"	VERTICAL CENTER WALL	6" CC
6	2	NO. 4	2'-4 1/2"	VERTICAL CENTER WALL	6" CC
7	2	NO. 4	2'-4 1/2"	VERTICAL CENTER WALL	6" CC
10	2	NO. 4	0'-10"	VERTICAL CENTER WALL	6" CC
11	2	NO. 4	0'-3"	VERTICAL CENTER WALL	6" CC
12	2	NO. 4	0'-3"	VERTICAL CENTER WALL	6" CC
13	2	NO. 4	0'-3"	VERTICAL CENTER WALL	6" CC

TOTAL LENGTH 338.19 FT. TOTAL WEIGHT 225.91 LBS.

3	REVISION 02/01/2008	Kirk R Pfeil — DESIGN ENGINEER
2	REVISION 01/02/1970	
1	REVISION 01/01/1968	Glenn Krajicek — CITY ENGINEER

CITY OF OMAHA PUBLIC WORKS DEPARTMENT

GRATE INLET TYPE "2A"

STANDARD PLATE **704** SHEET 1/1

ISSUE DATE: ... DECEMBER 2, 1998

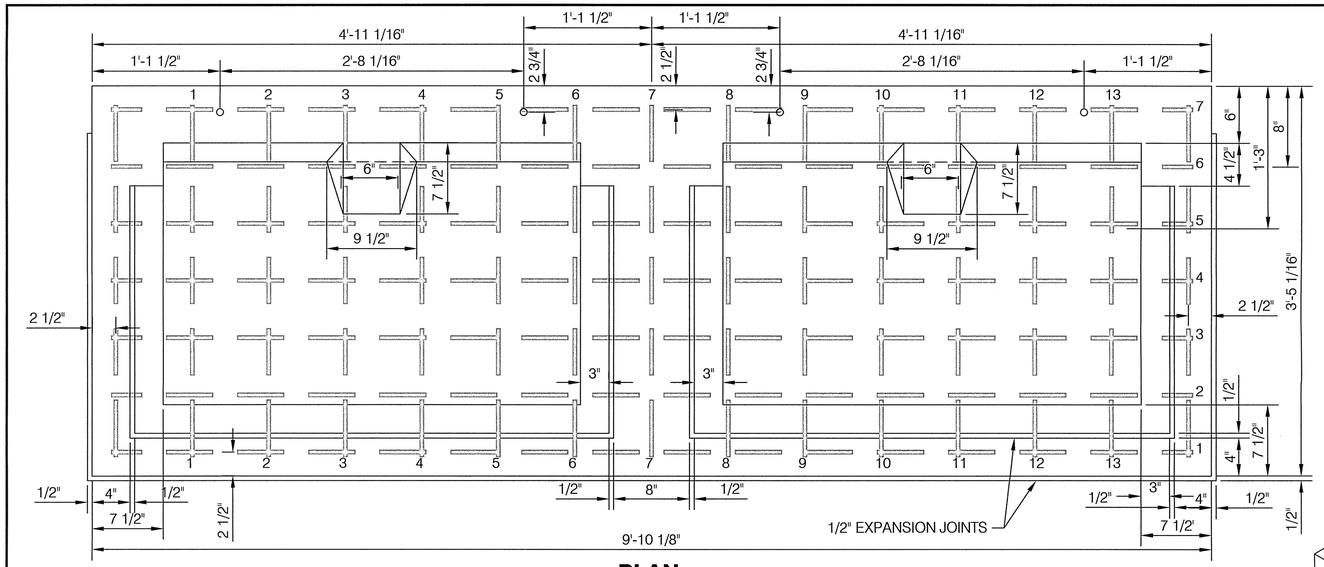

PLAN

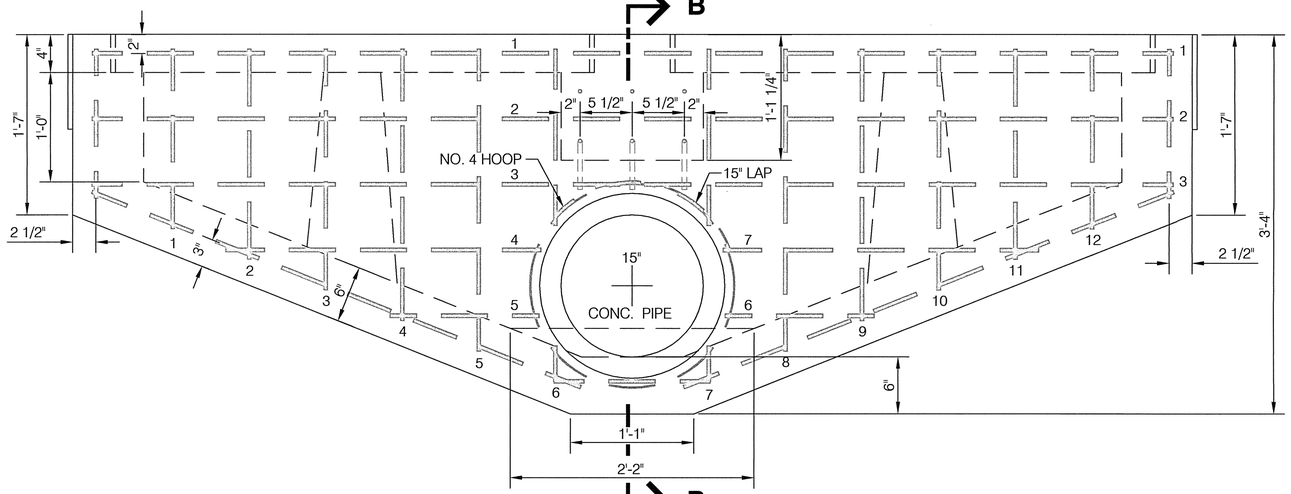

ELEVATION

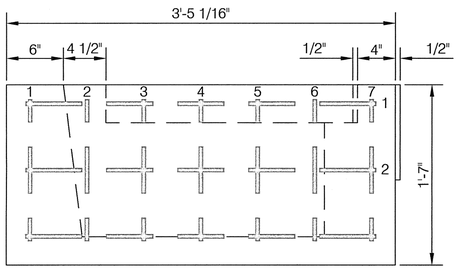

END VIEW

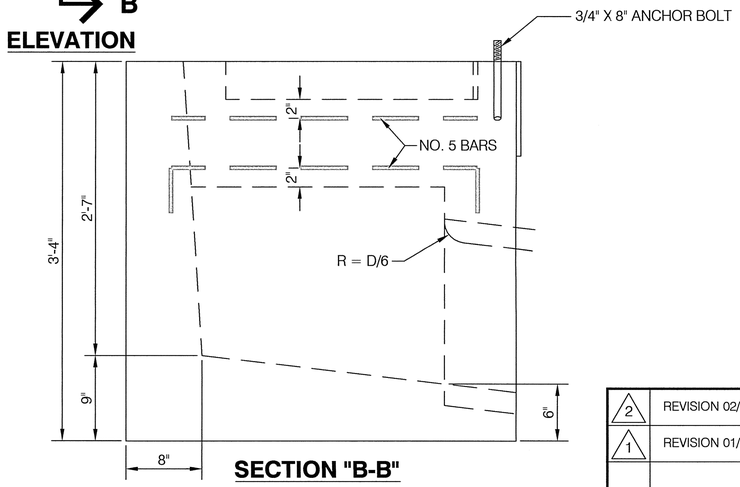

SECTION "B-B"

APPROXIMATE QUANTITIES

REINFORCING STEEL

BAR	NO.	SIZE	LENGTH	DESCRIPTION	SPACED
1 - 13	13	NO. 4	3'-1"	TRANSVERSE FOOTING	8 1/16"
1 - 7	7	NO. 4	9'-6"	TRANSVERSE FOOTING	6" CC
1 - 12	2	NO. 4	1'-7"	VERTICAL SIDE WALLS	8" CC
2 - 11	2	NO. 4	1'-11"	VERTICAL SIDE WALLS	8" CC
3 - 10	2	NO. 4	2'-2"	VERTICAL SIDE WALLS	8" CC
4 - 9	2	NO. 4	2'-5"	VERTICAL SIDE WALLS	8" CC
5 - 8	2	NO. 4	2'-8"	VERTICAL SIDE WALLS	8" CC
6 - 7	2	NO. 4	2'-11"	VERTICAL SIDE WALLS	8" CC
13	1	NO. 4	3'-0"	VERTICAL SIDE WALLS	8" CC
	1	NO. 4	HOOP	15" LAP-2" CLEAR OF PIPE	
1 - 3	6	NO. 4	9'-6"	LONGITUDINAL SIDE WALL	7" CC
4	2	NO. 4	7'-0"	LONGITUDINAL SIDE WALL	7" CC
5	2	NO. 4	4'-2"	LONGITUDINAL SIDE WALL	7" CC
1 - 7	14	NO. 4	1'-3"	VERTICAL END WALL	6" CC
1 - 2	4	NO. 4	3'-1"	LONGITUDINAL END WALL	7" CC
	3	NO. 4	2'-9"	BEAM THRU BOX	5 1/2"
	3	NO. 4	3'-9"	BEAM THRU BOX	5 1/2"

TOTAL LENGTH 265.56 FT.
TOTAL WEIGHT 165.14 LBS.

2 CAST IRON GRATE	APPROX. 365 LBS. EA. = 730 LBS.
2 CAST IRON FRAME	APPROX. 292 LBS. EA. = 584 LBS.
2 CAST IRON CURB INLET	APPROX. 290 LBS. EA. = 580 LBS.
4 - 8" x 3/4" ANCHOR BOLTS W/3/4" WASHERS & HEX NUTS	
BITUMINOUS EXP. JT. MATERIAL 1/2" x 10" x 17'-0" (PAVING DEPTH)	
BITUMINOUS EXP. JT. MATERIAL 1/2" x 4" x 17'-6" (FRAME DEPTH)	
BITUMINOUS EXP. JT. MATERIAL 1/2" x 8" x 0'-11" (CURB DEPTH)	
CUBIC YARDS CONCRETE	2.07 C.Y.
AREA OF BLOCK-OUT (EXISTING PAVEMENT ONLY)	6.8 S.Y.

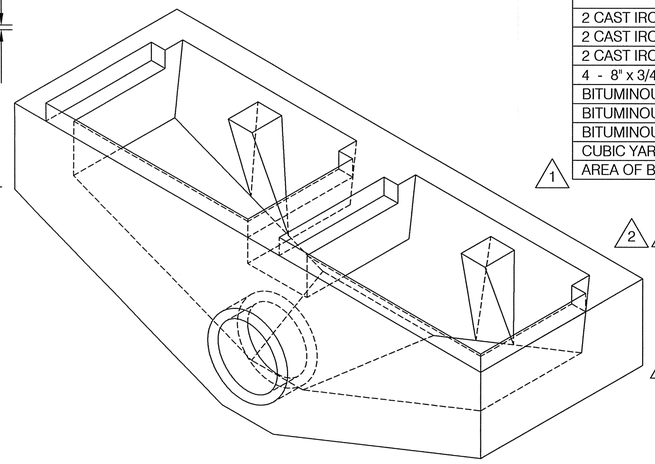

△1

NOTES:

△2 △1 1. CONCRETE SHALL BE CLASS L6AE.

2. REINFORCING STEEL SHALL BE DEFORMED BARS.

3. REINFORCING BARS WILL BE TIE WIRED AT ALL POINTS OF INTERSECTION

△2 4. STANDARD DRAWING OF CAST IRON CURB INLET AND FLAT GRATE AND FRAME. SEE STANDARD PLATE NO. 3-92.

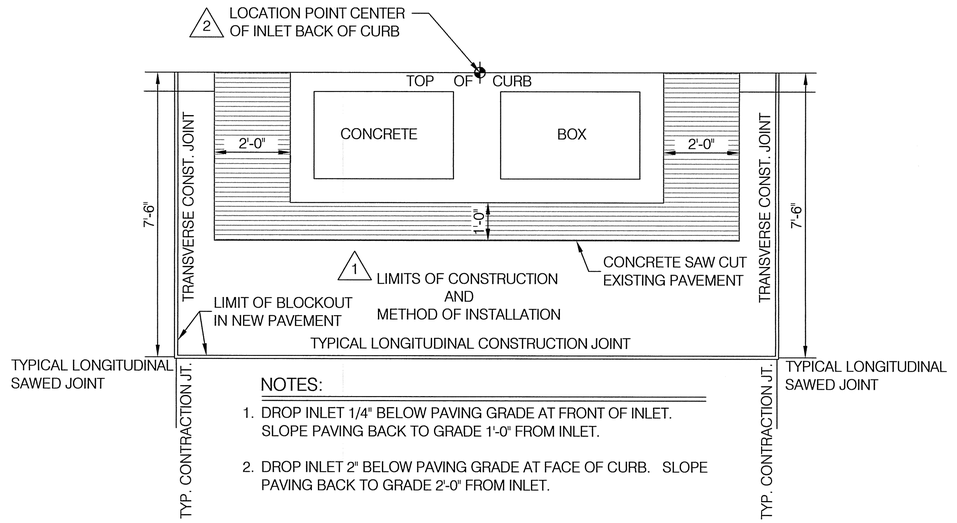

NOTES:

1. DROP INLET 1/4" BELOW PAVING GRADE AT FRONT OF INLET. SLOPE PAVING BACK TO GRADE 1'-0" FROM INLET.

2. DROP INLET 2" BELOW PAVING GRADE AT FACE OF CURB. SLOPE PAVING BACK TO GRADE 2'-0" FROM INLET.

△2	REVISION 02/01/2008	DESIGN ENGINEER
△1	REVISION 01/01/1968	CITY ENGINEER

CITY OF OMAHA PUBLIC WORKS DEPARTMENT

GRATE INLET TYPE "2A"

STANDARD PLATE 705 SHEET 1/1

ISSUE DATE: ... JANUARY 1, 1968

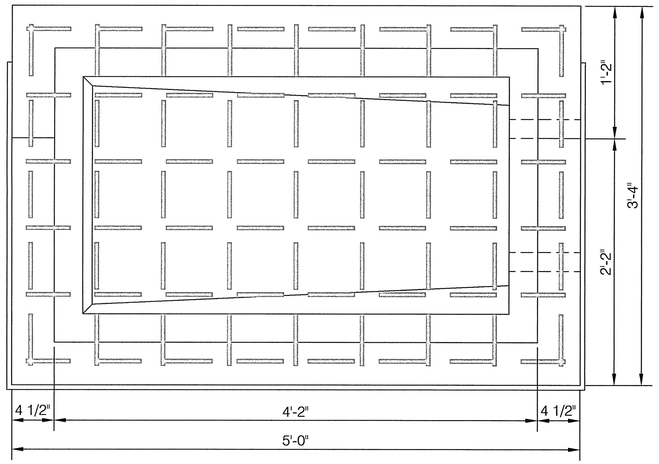

TOP VIEW

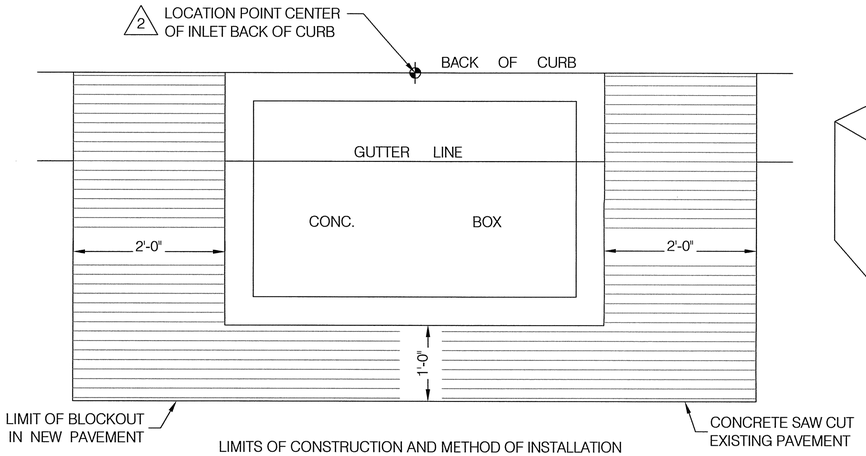

LIMITS OF CONSTRUCTION AND METHOD OF INSTALLATION

NOTES:

1. DROP INLET 1/4" BELOW PAVING GRADE AT FRONT OF INLET. SLOPE PAVING BACK TO GRADE 1'-0" FROM INLET.
2. DROP INLET 1" BELOW PAVING GRADE AT GUTTER LINE. SLOPE PAVING BACK TO GRADE 2'-0" FROM INLET.
3. WITHIN THE LIMITS SHOWN, CONSTRUCT OR REMOVE AND REPLACE PAVEMENT TO BE INCLUDED IN THE COST OF THE INLET.

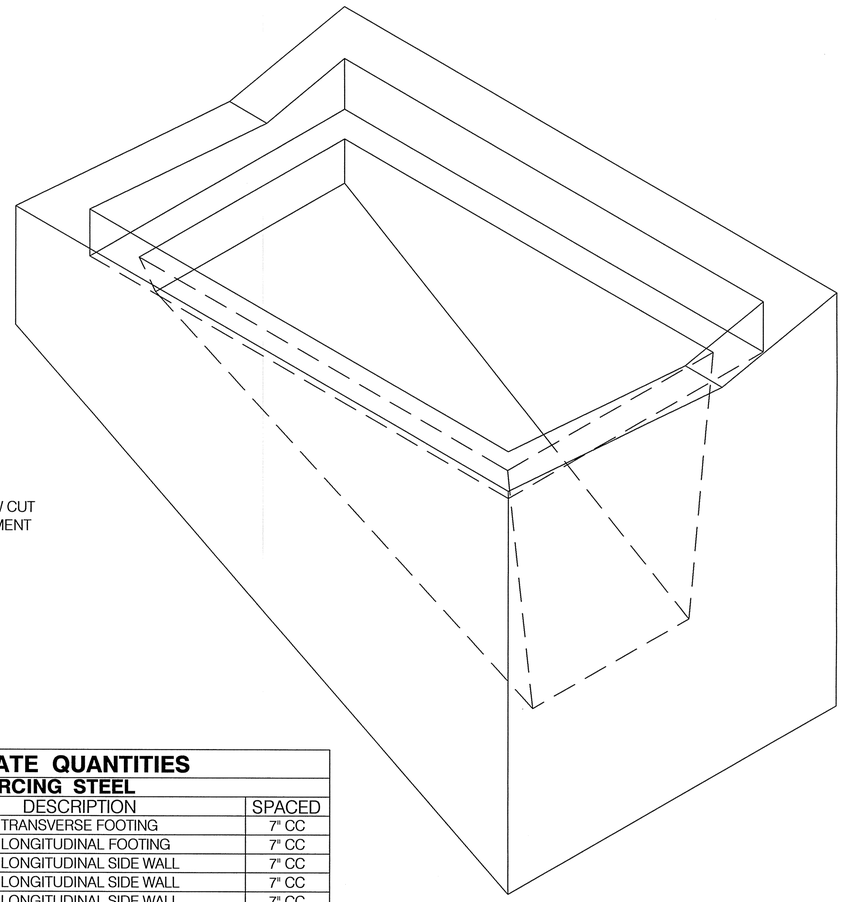

ISOMETRIC DETAIL

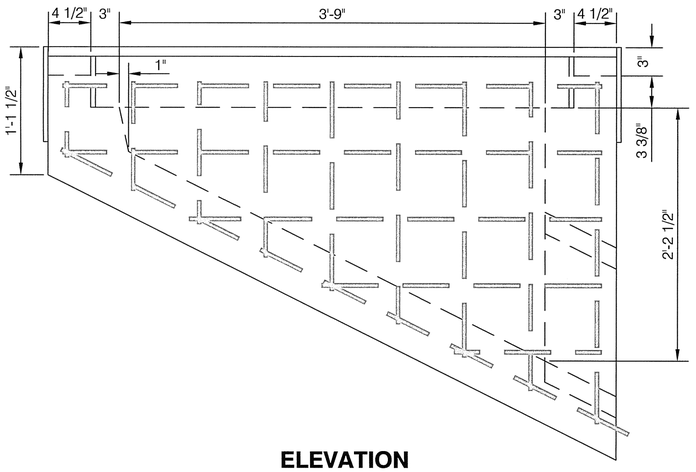

ELEVATION

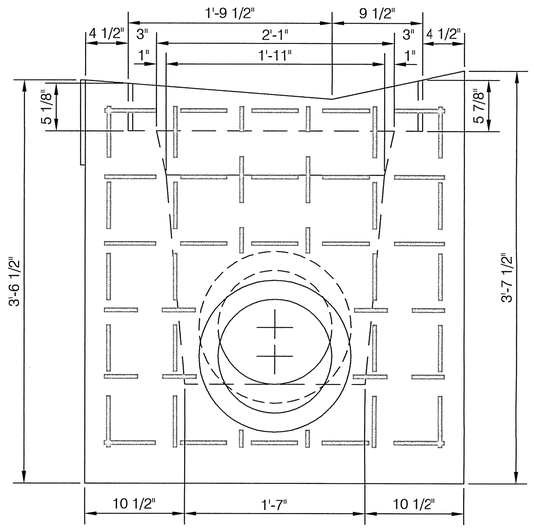

FRONT VIEW

APPROXIMATE QUANTITIES

REINFORCING STEEL

BAR	NO.	SIZE	LENGTH	DESCRIPTION	SPACED
1 to 9	9	NO. 4	3'-0"	TRANSVERSE FOOTING	7" CC
1 to 6	6	NO. 4	5'-3"	LONGITUDINAL FOOTING	7" CC
1	2	NO. 4	4'-8"	LONGITUDINAL SIDE WALL	7" CC
2	2	NO. 4	4'-7"	LONGITUDINAL SIDE WALL	7" CC
3	2	NO. 4	3'-6"	LONGITUDINAL SIDE WALL	7" CC
4	2	NO. 4	2'-3"	LONGITUDINAL SIDE WALL	7" CC
5	2	NO. 4	1'-1"	LONGITUDINAL SIDE WALL	7" CC
1	2	NO. 4	11"	VERTICAL SIDE WALL	7" CC
2	2	NO. 4	1'-2"	VERTICAL SIDE WALL	7" CC
3	2	NO. 4	1'-5"	VERTICAL SIDE WALL	7" CC
4	2	NO. 4	1'-9"	VERTICAL SIDE WALL	7" CC
5	2	NO. 4	2'-0"	VERTICAL SIDE WALL	7" CC
6	1	NO. 4	2'-4"	VERTICAL SIDE WALL	7" CC
7	1	NO. 4	2'-8"	VERTICAL SIDE WALL	7" CC
1 to 3	1	NO. 4	3'-0"	LONGITUDINAL END WALL (FRONT)	7" CC
4	1	NO. 4	11"	LONGITUDINAL END WALL (FRONT)	7" CC
5	1	NO. 4	11"	LONGITUDINAL END WALL (FRONT)	7" CC
1 to 2	1	NO. 4	2'-11"	VERTICAL END WALL (FRONT)	7" CC
3	1	NO. 4	1'-6"	VERTICAL END WALL (FRONT)	7" CC
4	1	NO. 4	1'-6"	VERTICAL END WALL (FRONT)	7" CC
5 to 6	1	NO. 4	2'-11"	VERTICAL END WALL (FRONT)	7" CC
1	1	NO. 4	3'-0"	LONGITUDINAL END WALL (REAR)	7" CC
1 to 6	1	NO. 4	7"	VERTICAL END WALL (REAR)	7" CC

TOTAL LENGTH 150 FT.
TOTAL WEIGHT 100 LBS.

1 CAST IRON TYPE SADDLE CREEK GRATE	APPROX. 340 LBS.
1 CAST IRON TYPE SADDLE CREEK FRAME	APPROX. 390 LBS.
BITUMINOUS EXP. JT. MATERIAL 1/2" x 9" x 10'-4" (PAVING DEPTH)	
BITUMINOUS EXP. JT. MATERIAL 1/2" x 6" x 13'-8" (FRAME DEPTH)	
CUBIC YARDS CONCRETE	.92 C.Y.
AREA OF BLOCKOUT (EXISTING PAVEMENT ONLY)	4.33 S.Y.

1 NOTES:

2 1. CONCRETE SHALL BE CLASS L6AE.
REINFORCING STEEL SHALL BE DEFORMED BARS.
2. REINFORCING BARS WILL BE TIE WIRED AT ALL POINTS OF
3. INTERSECTION
STANDARD DRAWING OF CAST IRON TYPE SADDLE CREEK GRATE
2 4. AND FRAME. SEE STANDARD PLATE NO. 3-94.
INLET PIPE MAY BE INSTALLED AT END OR EITHER SIDE.
5.

2	REVISION 02/01/2008	Kirk R Pfeiff DESIGN ENGINEER	CITY OF OMAHA PUBLIC WORKS DEPARTMENT
1	REVISION 01/01/1968	Charles Krajicek CITY ENGINEER	GRATE INLET TYPE SC
			STANDARD PLATE 707 — SHEET 1/1
			ISSUE DATE: ... JANUARY 1, 1968

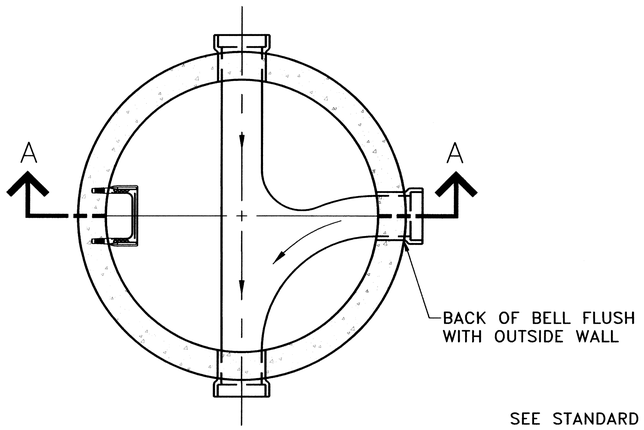

STANDARD 54" MANHOLE

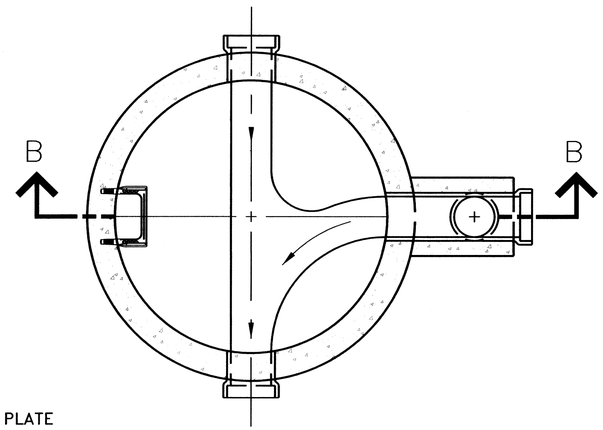

SEE STANDARD PLATE

MANHOLE DROP CONNECTION

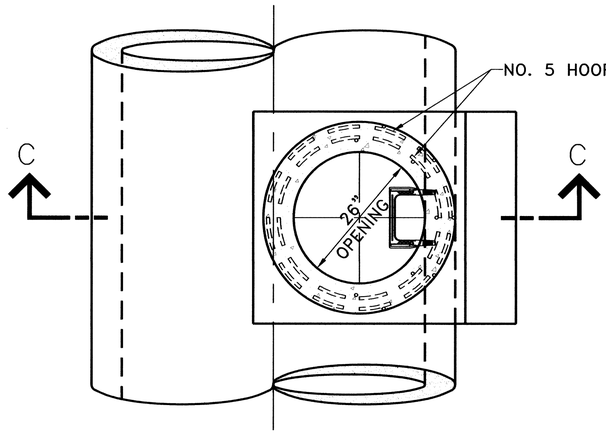

SIDEWALL TYPE MANHOLE

(48" PIPE OR LARGER)

NOTE:
1 FIELD CONSTRUCTION AS SHOWN OR SHOP FABRICATE BY REMOVING FRESH CONCRETE, CUTTING AND CONNECTING REINFORCING STEEL IN THE BARREL TO THE STEEL IN THE MANHOLE RISER. THEN GROUT THE STEEL TO FORM A NEAT, SMOOTH CONNECTION. SUBMIT DETAIL ON REQUEST.

GENERAL NOTES:

1. MANHOLES MAY BE CONSTRUCTED OF BRICK, MASONRY, OR CONCRETE. ALL MANHOLES ARE TO BE CONSTRUCTED CIRCULAR IN PLAN SIMILAR TO DRAWING. CONCRETE INMANHOLES SHALL BE CLASS L6AE OR SG65AE. THE INVERT OF THE MANHOLE SHALL BE MONOLITHICALLY POURED CONCRETE. (2)
2. ON BRICK MANHOLES ALL JOINTS SHALL BE A SHOVED JOINT CAREFULLY STRUCK WHEN LAID, AND ON THE OUTSIDE SHALL BE FILLED WITH MORTAR, FLUSH WITH THE OUTSIDE OF THE BRICK. BRICK MANHOLES SHALL BE FINISHED WITH ONE-HALF INCH PLASTER COAT ON THE OUTSIDE COMPOSED OF CEMENT MORTAR, ONE PART PORTLAND CEMENT AND THREE PARTS SAND BY VOLUME.
3. WHEN PRE-CAST CONCRETE MANHOLE SECTION ARE USED, EACH SECTION SHALL BE SET IN A FRESH BED OF MORTAR TO MAKE A MORTAR JOINT ONE-EIGHTH INCH THICK, AND SHALL BE POINTED UP INSIDE AND OUT AFTER THE SECTION IS IN PLACE.
4. THE CAST IRON MANHOLE RING SHALL SET IN A BED OF MORTAR AND CAREFULLY ADJUSTED TO THE EXISTING GRADE. MANHOLE RING AND COVER SHALL BE CITY OF OMAHA STANDARDS, AS PER STANDARD PLATE NO. 3-90. MANHOLE STEPS SHALL BE CITY OF OMAHA STANDARD, AS PER STANDARD PLATE NO. 3-90.
5. DROPS ARE REQUIRED FOR SANITARY SEWERS AND COMBINED SEWERS WHEN IT IS NECESSARY THAT SANITARY FLOW ENTER A MANHOLE AT A HEIGHT OF MORE THAN TWO FT. ABOVE IT'S FLOWLINE.
6. ON LARGE DIAMETER PIPE THE INVERT SHALL BE FORMED WHEN POURED TO THE THREE QUARTER POINT OF THE PIPE, BRICK THEN SHALL BE USED TO COMPLETE THE MANHOLE TO A POINT WHERE PRE-CAST MANHOLE SECTIONS CAN BE USED, OR TO THE TOP OF THE MANHOLE.
7. FOR MANHOLES LESS THAN 7'-0" HIGH THE 54" DIA WILL BE CARRIED TO THE SURFACE-COVER WITH 66" DIA. ROUND SLAB WITH STD. M.H. RING & COVER. THE SLAB SHALL BE REINFORCED WITH NO. 5 BARS 12" CENTER TO CENTER BOTH WAYS. ALSO 4-NO. 5 BARS TO BE PLACED DIAGONALLY AROUND THE OPENING. THE COST OF THE FLAT COVER IS TO BE INCLUDED IN THE COST OF THE MANHOLE.

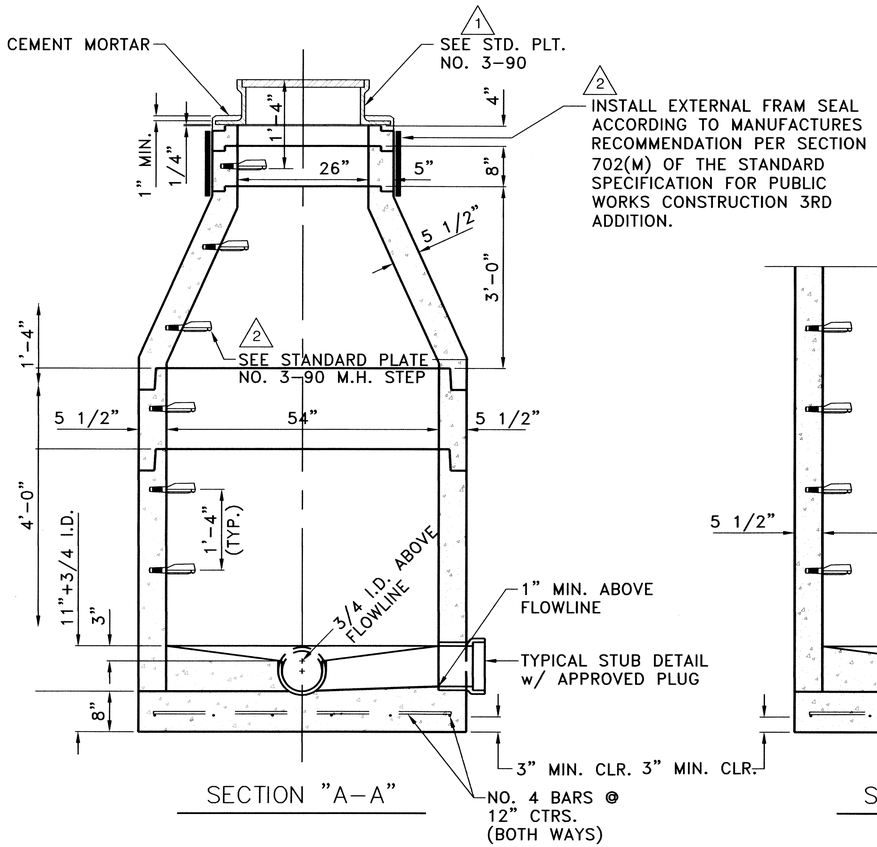

SECTION "A-A"

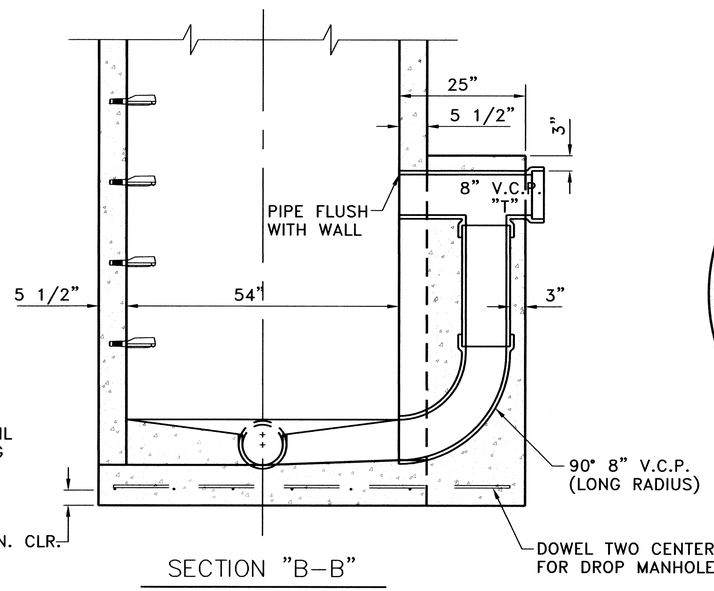

SECTION "B-B"

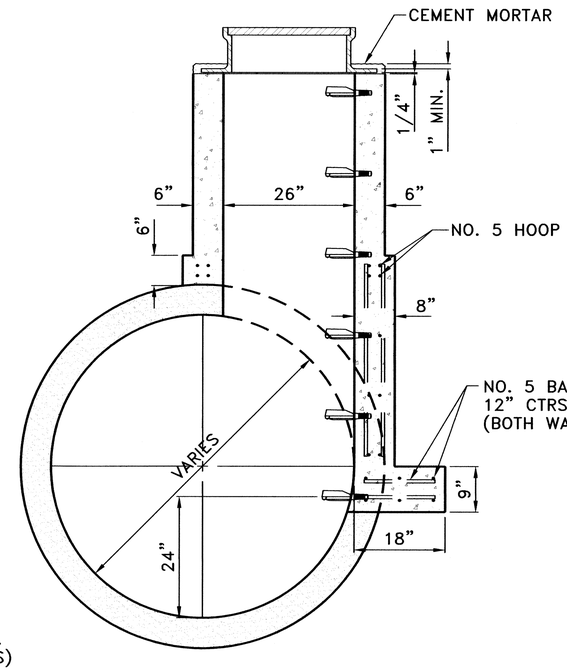

SECTION "C-C"

2	REVISION 08/31/2007	DESIGN ENGINEER	CITY OF OMAHA PUBLIC WORKS DEPARTMENT	
1	REVISION 01/01/1968	CITY ENGINEER	**STANDARD DETAIL OF MANHOLE**	**STANDARD PLATE 708** SHEET 1/1
				ISSUE DATE: ... JANUARY 1, 1968

Delete trim line

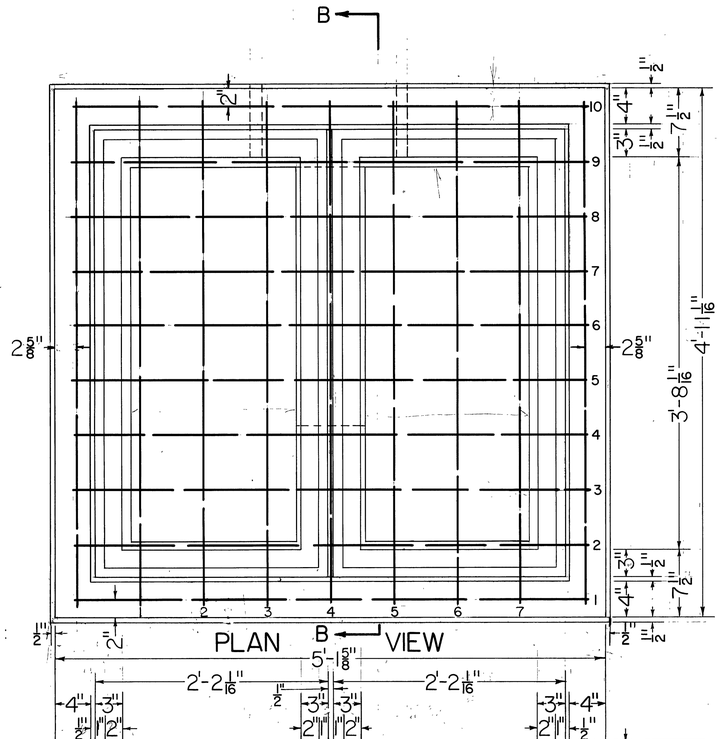

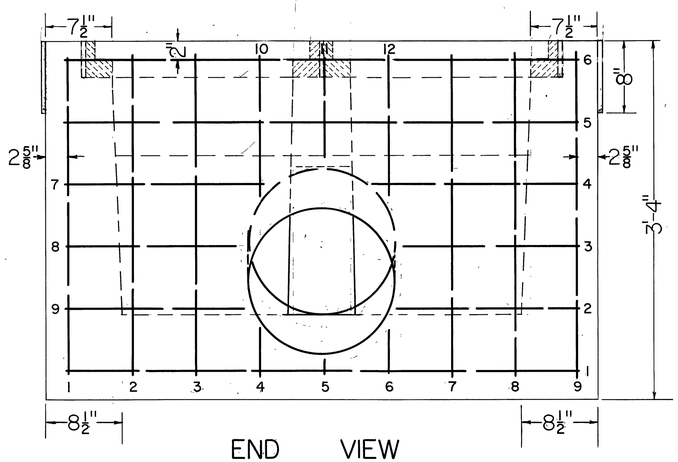

END VIEW

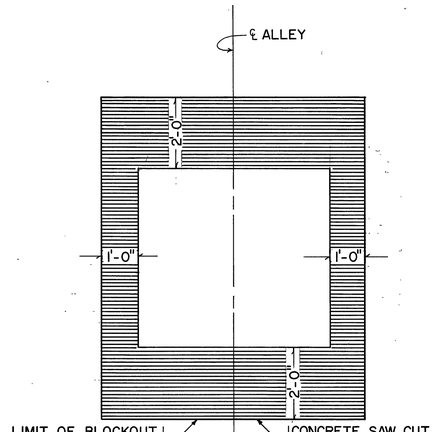

LIMITS OF CONSTRUCTION AND METHOD OF INSTALLATION

NOTE:
DROP INLET 1/4" BELOW PAVING GRADE AT THE CORNERS OF THE INLET. SLOPE PAVING BACK TO GRADE 1'-0" FROM INLET.
DROP INLET 3/4" BELOW PAVING GRADE AT CENTERLINE OF ALLEY. SLOPE PAVING BACK TO GRADE 2'-0" FROM INLET.
WITHIN THE LIMITS SHOWN, CONSTRUCT OR REMOVE AND REPLACE PAVEMENT TO BE INCLUDED IN THE COST OF THE INLET.

APPROXIMATE QUANTITIES

REINFORCING STEEL

BAR	NO.	SIZE	LENGTH	DESCRIPTION	SPACE
1-7	7	NO.4 ϕ	4'-9"	TRANSVERSE FOOTING	7 1/8" C.
1-10	10	" "	4'-10"	" " " "	6 1/8" C
1	2	NO.4	1'-3"	VERTICAL SIDE WALL	6" C
2	2	" "	1'-5"	" " "	"
3	2	" "	1'-9"	" " "	"
4	2	" "	1'-10"	" " "	"
5	2	" "	2'-1"	" " "	"
6	2	" "	2'-4"	" " "	"
7	2	" "	2'-6"	" " "	"
8	2	" "	2'-8"	" " "	"
1	2	" "	1'-4"	LONGITUDINAL SIDE WALL	7 1/8" C.
2	2	" "	2'-9"	" " " "	"
3	2	" "	4'-2"	" " " "	"
4-5	4	" "	4'-8"	" " " "	"
1-9	9	NO.4 ϕ	1'-0"	VERTICAL END WALL	7 1/8" C
1-3	3	" "	4'-9"	LONGITUDINAL END WALL	5 3/4" C
1-3	3	NO.4 ϕ	3'-0"	VERTICAL END WALL	7 1/8" C
4-6	2	" "	0'-6"	" " "	"
5	1	" "	0'-3"	" " "	"
7-8	3	" "	3'-0"	" " "	"
10-12	2	" "	1'-4"	" " "	"
11	1	" "	1'-0"	" " "	"
1	1	NO.4 ϕ	4'-10"	LONGITUDINAL END WALL	7" CT
2-3	3	" "	1'-8"	" " "	"
4	1	" "	1'-11"	" " "	"
5-6	2	" "	4'-10"	" " "	"
7	1	" "	1'-11"	" " "	"
8	1	" "	1'-7"	" " "	"
1-2	2	NO.4 ϕ	4'-9"	LONGITUDINAL CENTER WALL	7" CT.
4-8	4	NO.4 ϕ	0'-9"	VERTICAL CENTER WALL	6" CT.
3	1	" "	1'-3"	" " "	"
2	1	" "	1'-1"	" " "	"
1	1	" "	0'-11"	" " "	"

TOTAL LENGTH 228.9 FT.
TOTAL WEIGHT 153.37 LBS.

2 CAST IRON GRATES	365 LBS. X 2 = 730 LBS.
2 CAST IRON FRAMES	292 LBS. X 2 = 584 LBS.
BITUMINOUS EXP. JT.	1/2" X 4" X 20'-6 3/16"
" " " "	1/2" X 6" X 20'-1 5/8" ALLEY
" " " "	1/2" X 8" X 20'-1 5/8" STREET

CUBIC YARDS CONCRETE 20 C.Y. | AREA OF BLOCK-OUT 7.0 S.Y.

NOTE:
CONCRETE SHALL BE CLASS FL60AE ON SG65AE.
REINFORCING STEEL SHALL BE DEFORMED BARS.
REINFORCING STEEL SHALL BE TIE WIRED AT ALL POINTS OF INTERSECTION.

STANDARD DRAWING OF CAST IRON FLAT GRATE AND FRAME SEE STANDARD PLATE NO. 701.

INLET PIPE MAY BE INSTALLED AT END OR EITHER SIDE.

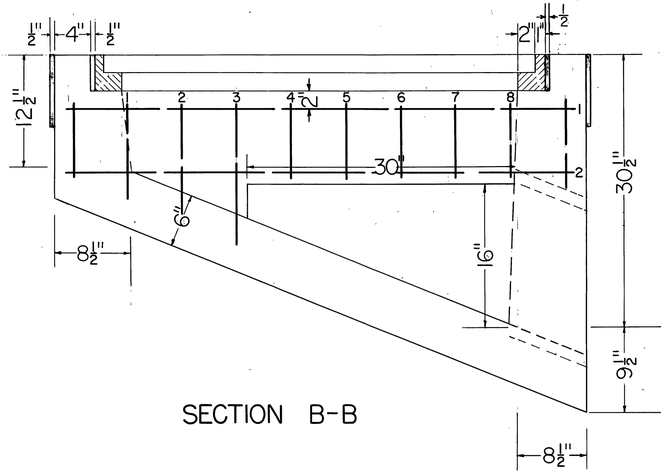

SECTION B-B

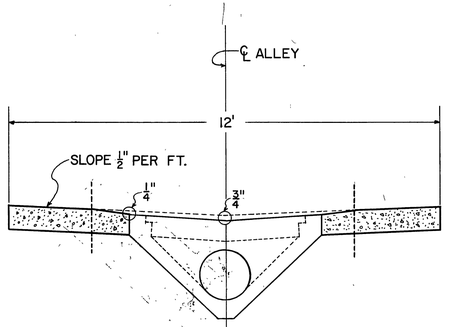

TYPICAL ALLEY SECTION

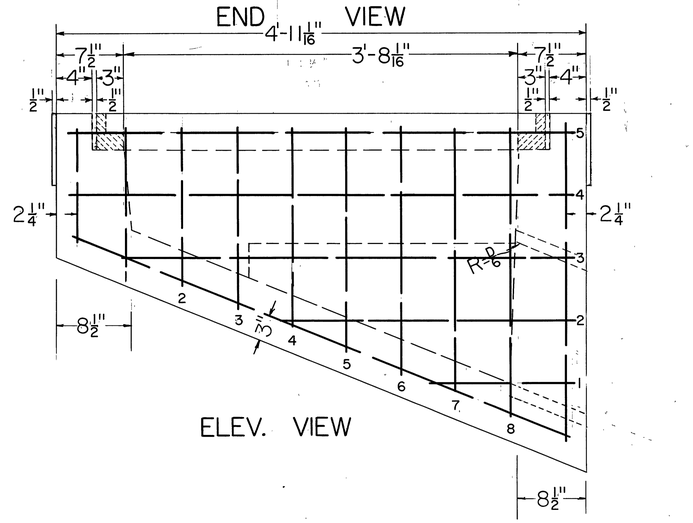

ELEV. VIEW

CITY OF OMAHA
PUBLIC WORKS DEPARTMENT

APPROVED 3-20-59
SEWER ENGINEER

APPROVED 4-3-59
CITY ENGINEER

APPROVED
DIRECTOR OF PUBLIC WORKS

STANDARD DETAIL OF TYPE "C" DOUBLE INLET WITH DOUBLE CAST IRON FLAT GRATE AND FRAME.

REVISED BY P.J.V. 1/68	DESIGNED BY- G.E.E.	DETAILED BY: W.R.S.	CHECKED BY: J.B	FILE NO. 1010-109

STANDARD PLATE NO. 710

Reduce to 10.5"

Delete trim line

STANDARD BLUE PRINT, OMAHA 28116

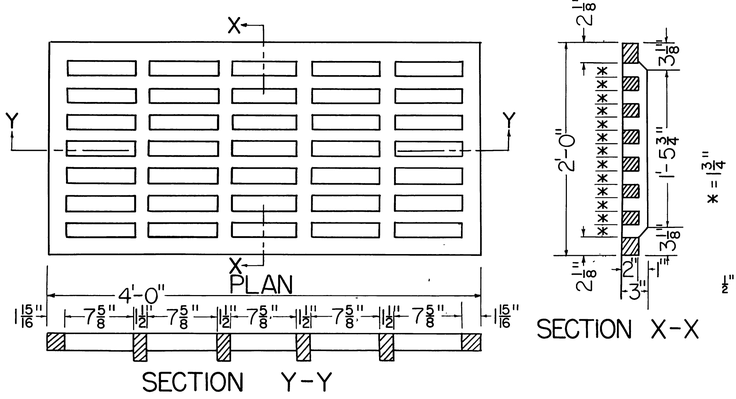

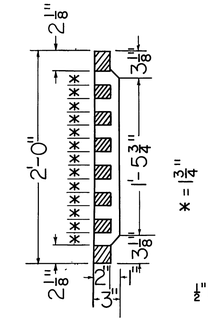

DETAIL OF CAST IRON GRATE

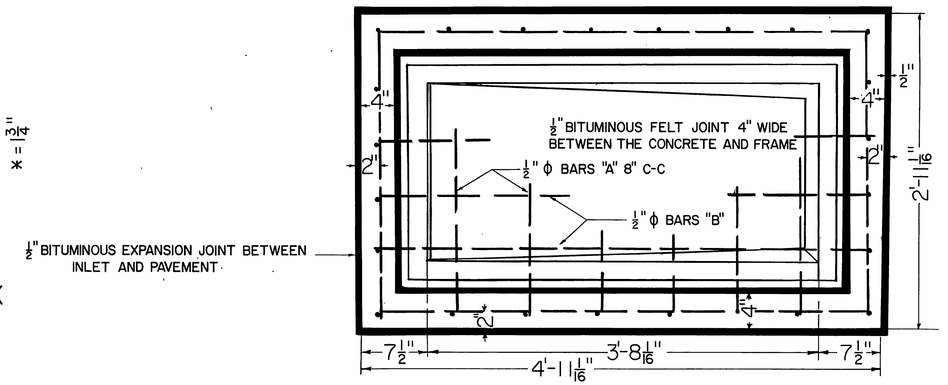

PLAN

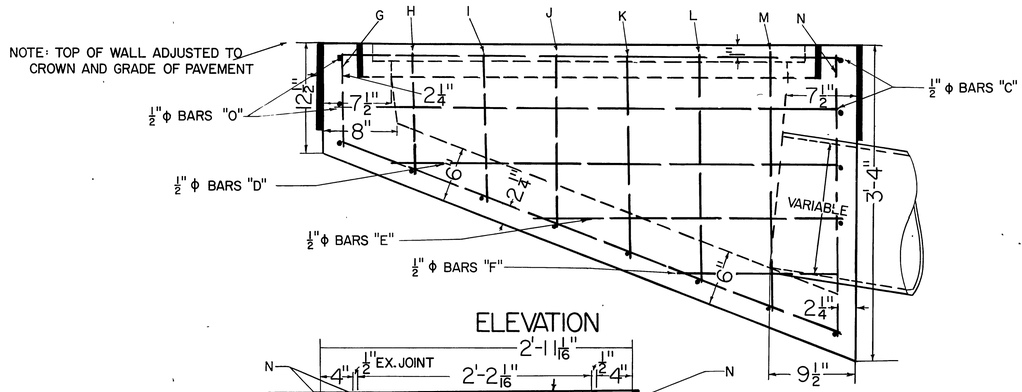

ELEVATION

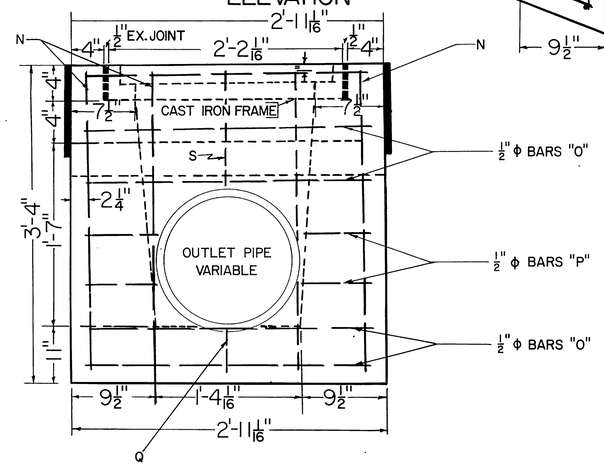

SIDE VIEW

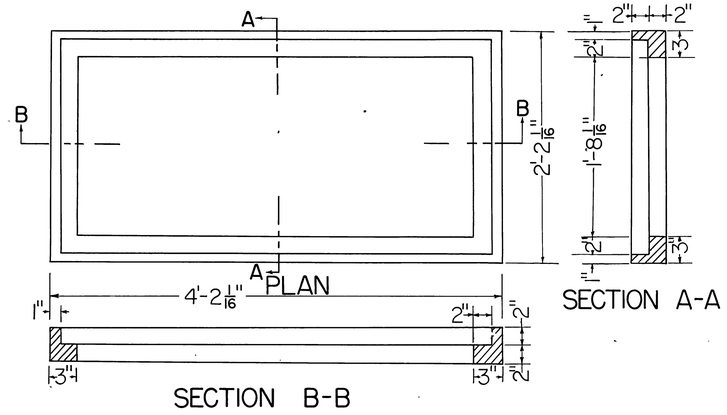

DETAIL OF CAST IRON FRAME

QUANTITIES					
REINFORCING STEEL					
BARS	NO	SIZE	LENGTH	DESCRIPTION	SPACING
A	8	1/2"ϕ	2'-8"	TRANSVERSE FOOTINGS	8"C-C
B	5	"	5'-1"	LONGITUDINAL	8"C-C
C	4	"	4'-8"	" SIDE WALLS	6" "
D	2	"	4'-3"	" " "	6" "
E	2	"	3'-0"	" " "	6" "
F	2	"	1'-6"	" " "	6" "
G	5	"	0'-11"	VERTICAL END WALLS	8" "
H	2	"	1'-2"	" SIDE WALLS	8" "
I	2	"	1'-5"	" " "	8" "
J	2	"	1'-8"	" " "	8" "
K	2	"	1'-11"	" " "	8" "
L	2	"	2'-2"	" " "	8" "
M	2	"	2'-5"	" " "	8" "
N	4	"	2'-8"	" SIDES & END WALLS	8" "
O&O	5	"	2'-8"	LONGITUDINAL " "	6" "
P	4	"	0'-8"	" " "	6" "
Q	1	"	0'-5"	" " "	8" "
R	1	"	0'-9"	" " "	8" "
S	1	"	1'-0"	VERTICAL " "	8" "
T	1	"	1'-2"	" " "	8" "
TOTAL WEIGHT OF 1/2" ϕ BARS					92.9 LBS.
CAST IRON GRATE				CALC. 356	LBS.
" " FRAME				" 251	"
1/2" BITUMINOUS EXPANSION JOINT MATERIAL 4" WIDE LIN.FT. 13'-0"					
1/2" " " " " 8" " " " 15'-10"					
CUBIC YARDS CONCRETE					.62 CU. YDS.

⚠ NOTE:
CONCRETE SHALL BE CLASS FL60AE OR SG65AE.
REINFORCING STEEL SHALL BE DEFORMED BARS.
REINFORCING SHALL BE TIE WIRED AT ALL POINTS OF INTERSECTION.

⚠ REVISED BY P.J.V. 1/68

CITY OF OMAHA
DEPARTMENT OF PUBLIC IMPROVEMENTS

STANDARD DRAWING
SINGLE BASIN GRATE INLET
TYPE "B-B"

DESIGNED BY	SCALE:	CHECKED BY	DRAWING NO.
J. M. B.	1 1/2" = 1'-0"	D. E. F.	145163

STANDARD PLATE NO. 712

STANDARD BLUE PRINT, OMAHA, NEBR 97309

Delete Trim Line 2

(J/R)

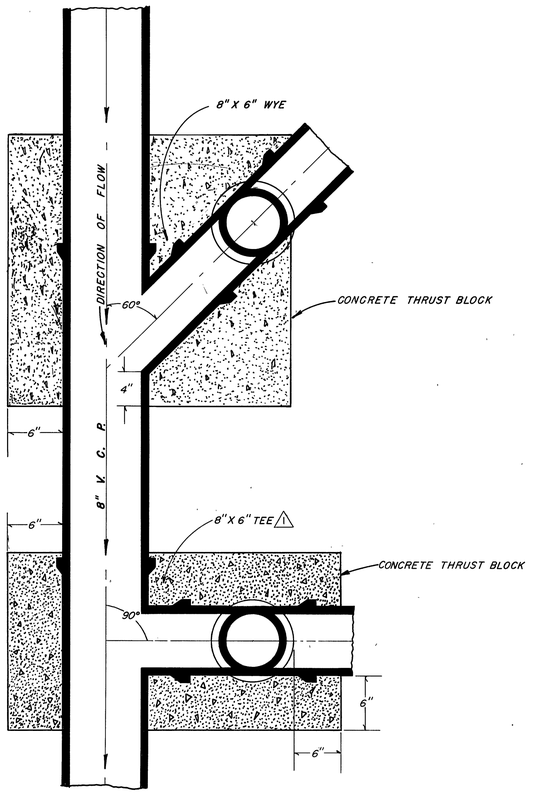

PLAN

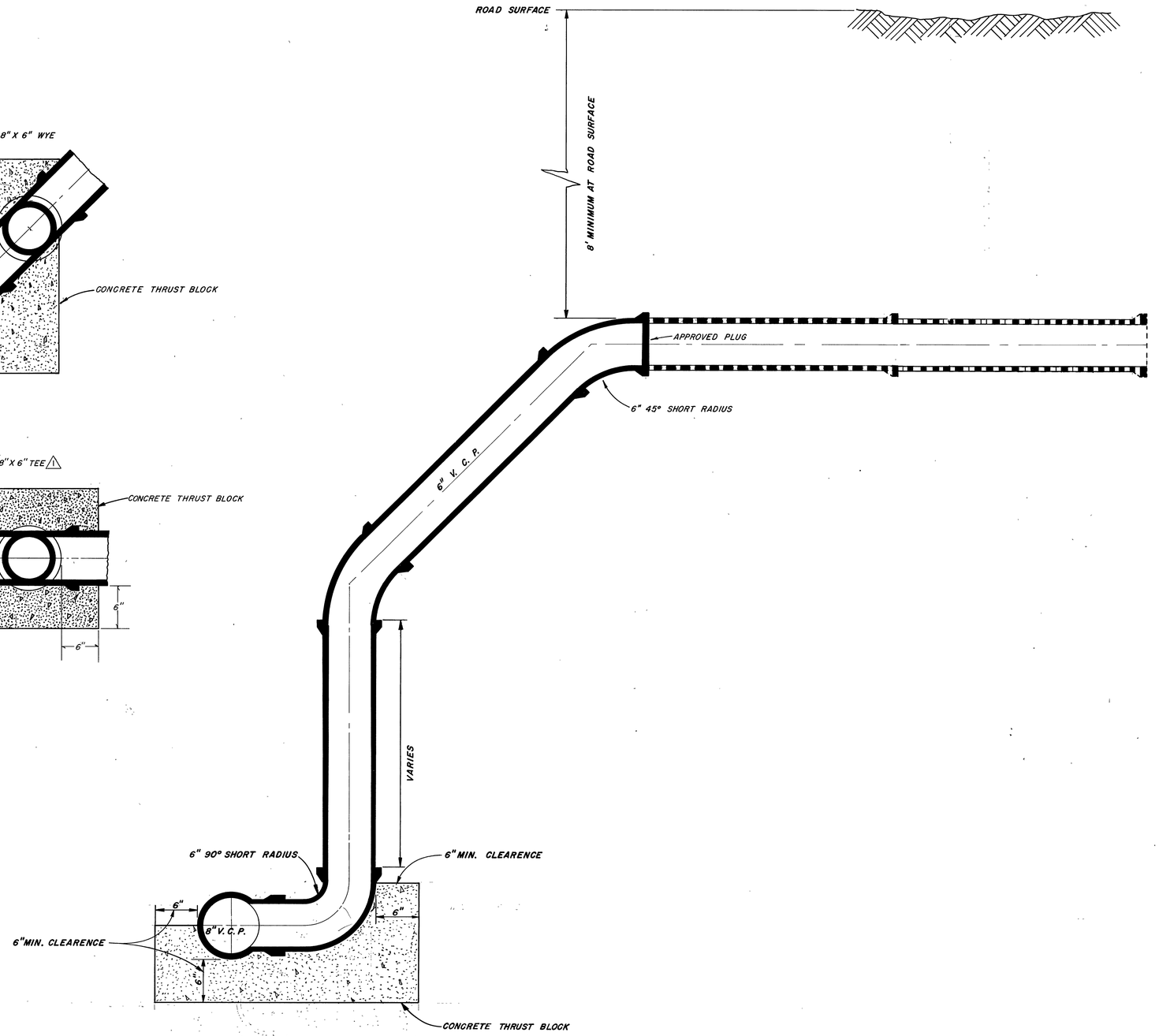

ELEVATION
WYE OR TEE

CITY OF OMAHA
PUBLIC WORKS DEPARTMENT

TYPICAL RISER DETAIL

	Drawn by:	Checked by:	Scale:	
2 REVISED BY S.E.H. 12/74 1 REVISED BY PJV 1/68	W.R.S	S.R. BALES, P.E.	1 1/2" = 1'-0"	1010 - 114

STANDARD PLATE NO. 715

AT ASH INC. OF OMAHA

Delete Trim Line

Reduce to 10.5"

APPROVED:
DESIGN ENGINEER DATE 5/24/68
CITY ENGINEER DATE 5/27/68
PUBLIC WORKS DIRECTOR DATE 5/27/68

CITY of OMAHA
PUBLIC WORKS DEPARTMENT

RING & BEEHIVE GRATE

REVISION DATES	
	5-1-68
11-14-69	

STANDARD PLATE NO. 716

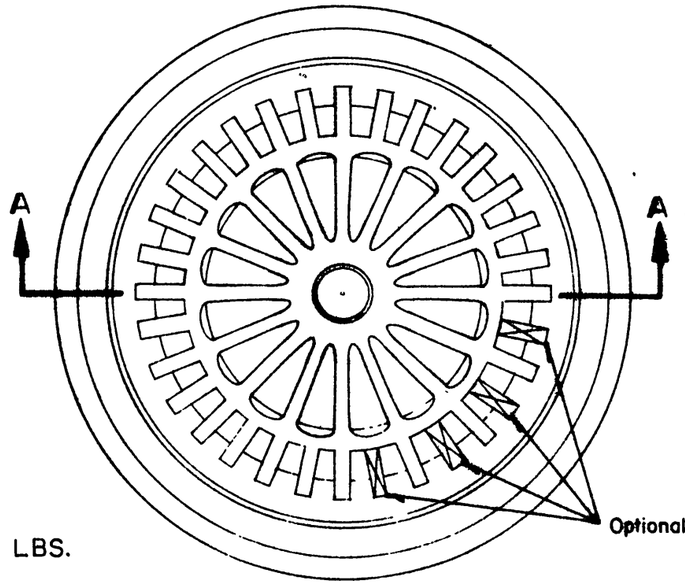

APPROX. WT. 160 LBS.

TOP VIEW

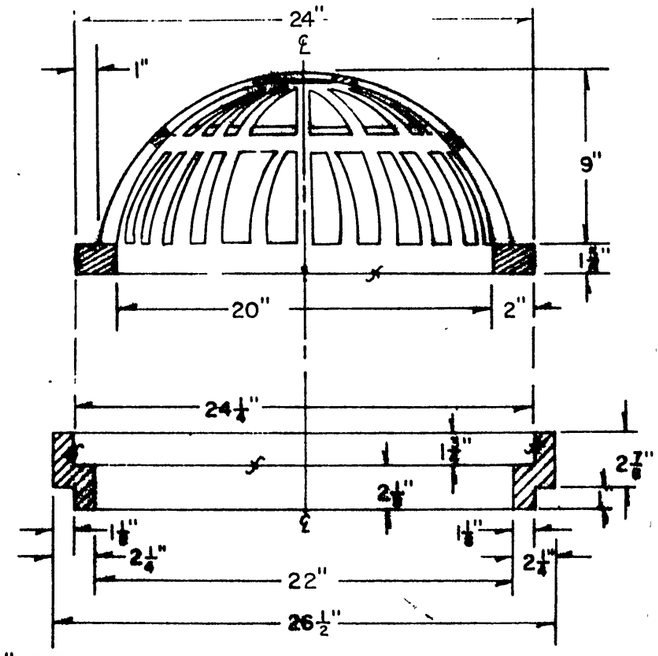

ALTERNATE: TOP 4" OF CITY OF OMAHA STANDARD M.H. RING—APPROX. WT. 70 LBS.

SECTION A-A

℘ - Finished Surface

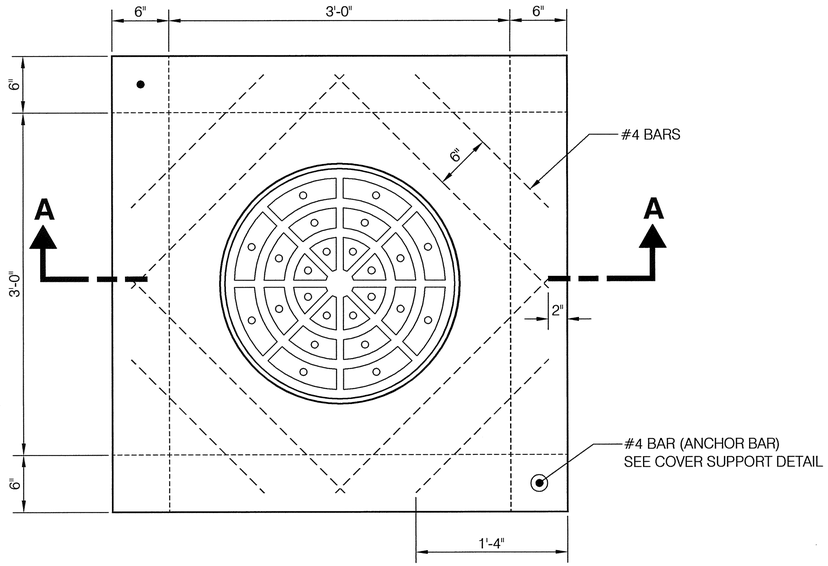

PLAN VIEW

SCALE : 1 1/2" = 1'-0"

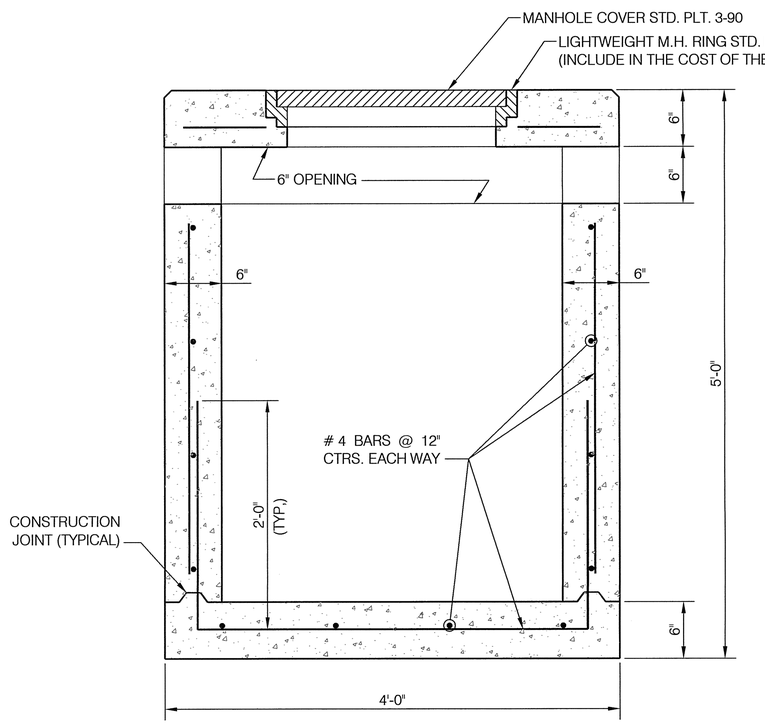

SECTION A-A

SCALE : 1 1/2" = 1'-0"

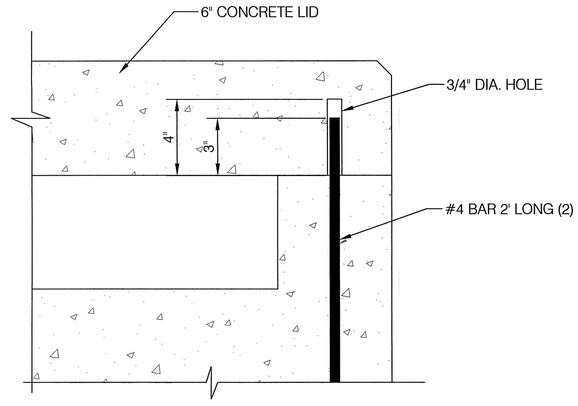

COVER SUPPORT DETAIL

SCALE : 1 1/2" = 1'-0"

NOTES:

1. LEAD PIPE - ANY SIZE UP TO 30" MAY BE INSTALLED IN ANY WALL.
2. OPENINGS - NUMBER & LOCATION TO FIT FIELD CONDITIONS.
3. ALL EXPOSED EDGES OF BOX TO BE CAMFERED.
4. ALL REINFORCING STEEL SHALL CLEAR ALL SURFACES A MINIMUM OF 2".

1	REVISION 02/01/2008	DESIGN ENGINEER	CITY OF OMAHA PUBLIC WORKS DEPARTMENT
		CITY ENGINEER	**AREA INLET TYPE 1**
			STANDARD PLATE **717** SHEET 1/2
			ISSUE DATE: ... NOVEMBER 22,1976

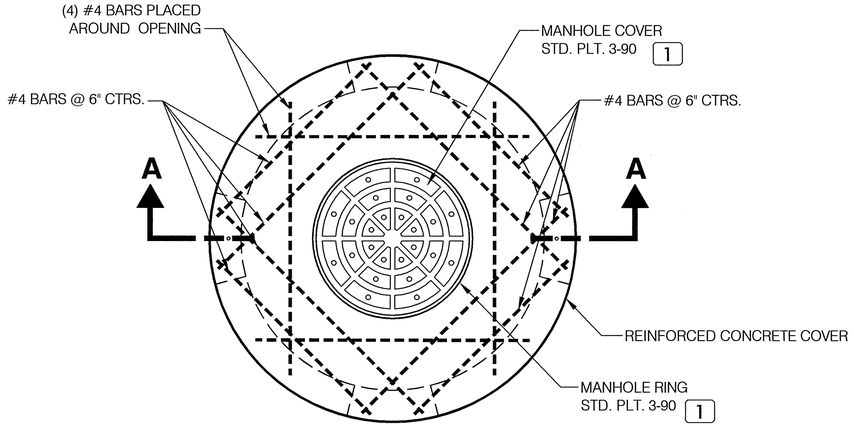

PLAN VIEW

SCALE : 1" = 1'-0"

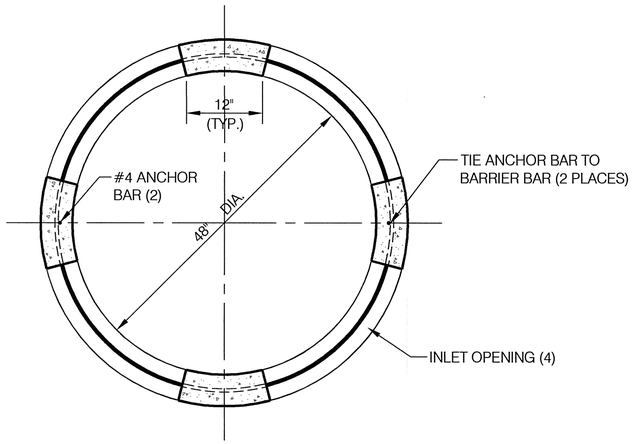

SECTION B-B

SCALE : 1" = 1'-0"

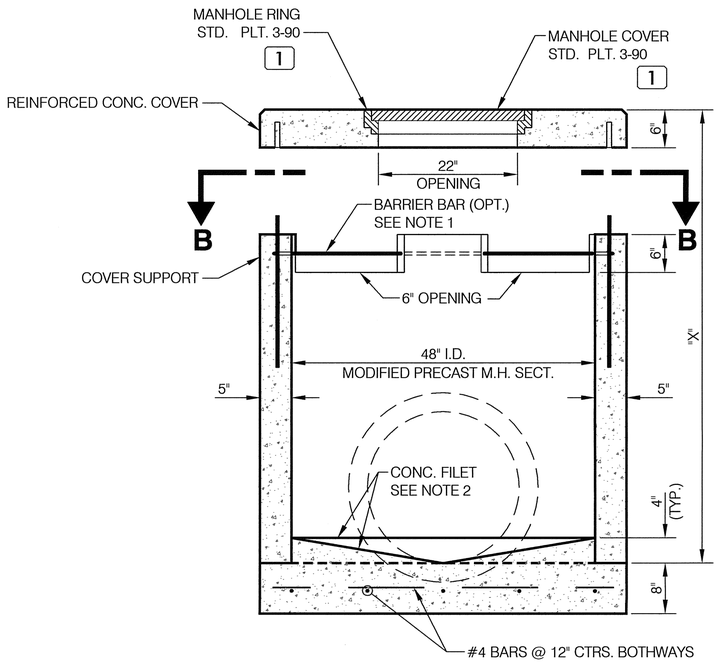

SECTION A-A

SCALE : 1" = 1'-0"

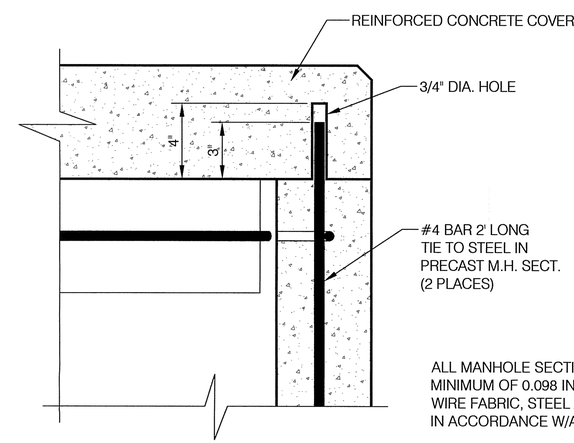

ALL MANHOLE SECTIONS ARE REINFORCED WITH A MINIMUM OF 0.098 IN. 2/VERT. FT. W/WELDED STEEL WIRE FABRIC, STEEL AREAS WILL ALSO BE FURNISHED IN ACCORDANCE W/ASTM C-478 WHEN SPECIFIED.

COVER SUPPORT DETAIL

SCALE : 3" = 1'-0"

NOTES:

1. BARRIER BAR SHALL BE #4 SMOOTH BAR COMPLYING W/ASTM A-36, FULLY GALVANIZED IN ACCORDANCE W/ASTM A-123.
2. WHERE TWO LEAD PIPES ARE USED, FILET SHALL BE BROUGHT P TO SPRING LINE OF LARGER PIPE.
3. ALL REINFORCING STEEL SHALL CLEAR ALL SURFACES A MINIMUM OF 2".
4. ALL EXPOSED EDGES OF AREA INLET SHALL BE CHAMFERED.

1	REVISION 02/01/2008	DESIGN ENGINEER CITY ENGINEER	CITY OF OMAHA PUBLIC WORKS DEPARTMENT **AREA INLET TYPE 2**	**STANDARD PLATE 717** SHEET 2/2 ISSUE DATE: ... NOVEMBER 22, 1976

CURB INLET DATA w/7" PAVEMENT

DIA. OF PIPE	DIMENSIONS X MIN.	DIMENSIONS D	CONCRETE CU. YDS.	CONCRETE CU. YDS. DEDUCT FOR EACH PIPE OPENING
12"	3'-2"	1'-10"	3.289	.034
15"	3'-6"	1'-10"	3.416	.051
18"	3'-9"	1'-10"	3.512	.071
24"	4'-3"	1'-10"	3.703	.121

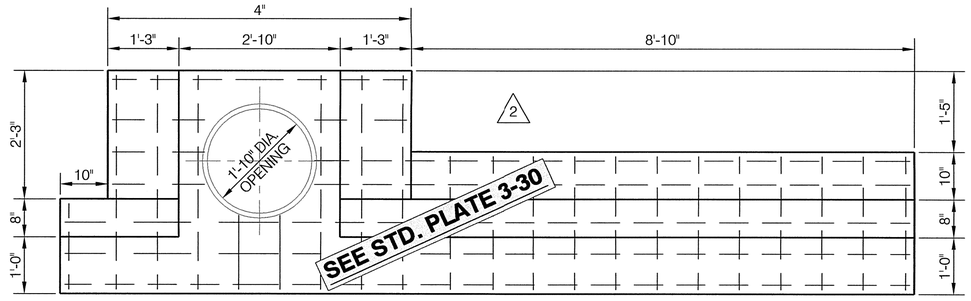

REINFORCED CONCRETE COVER

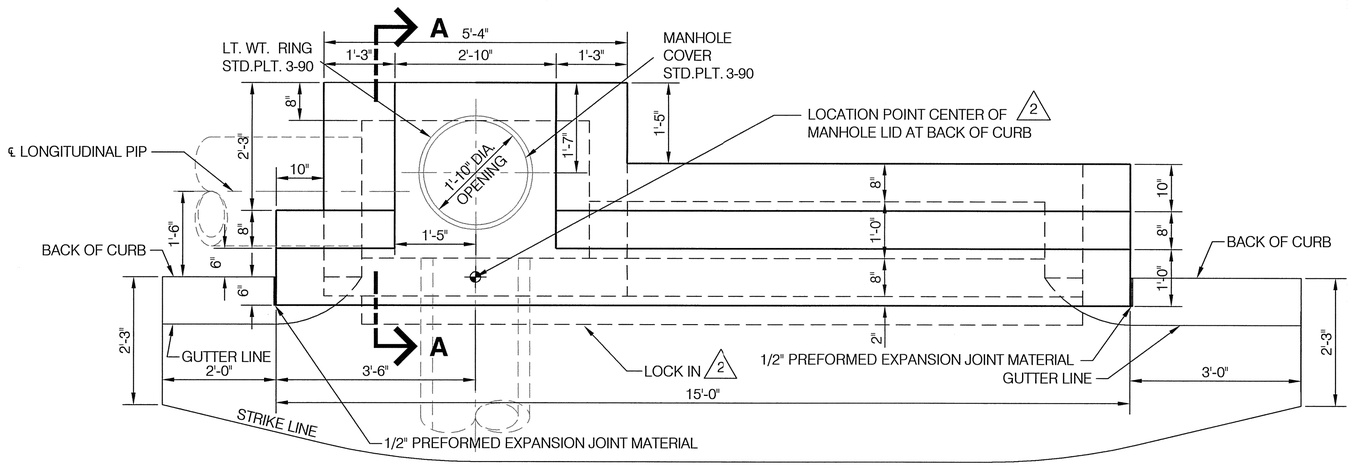

PLAN VIEW

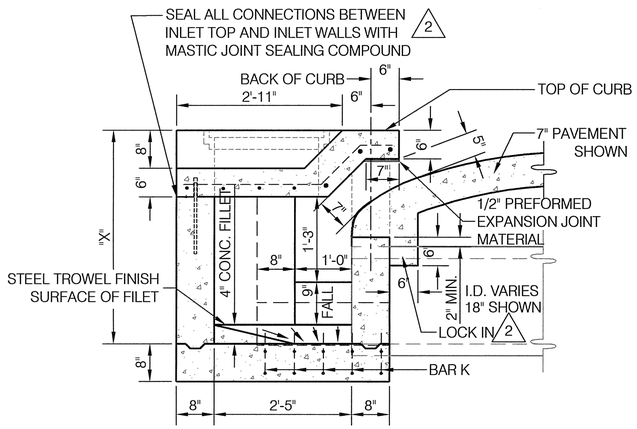

SECTION "A-A"

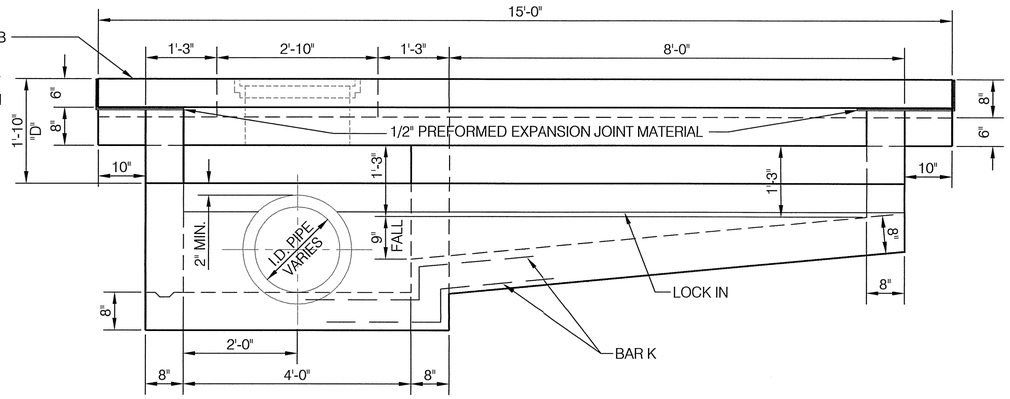

FRONT ELEVATION

NOTES:

1. INLET DESIGN FOR OUTLET THROUGH FRONT, BACK OR END WALL. FOR OTHER LAYOUTS SEE SHEETS 2 AND 3.
2. (2) ALL CONCRETE SHALL BE CLASS L6AE.
3. ALL EXPOSED EDGES OF CONCRETE SHALL BE CHAMFERED.
4. (2) THE CONCRETE COVER MAY BE CAST IN PLACE OR PRECAST, WITH LT. WT. RING AND COVER (STD. PLT. 3-90).
5. REINFORCING STEEL SHALL BE DEFORMED BARS. THE MINIMUM COVERING, MEASURED FROM THE FACE OF CONCRETE TO THE SURFACE OF ANY REINFORCING BAR SHALL BE 1 1/2 INCHES.
6. "D" AND "X" ARE DESIGNED FOR INLET USE WITH 7" THICK PAVEMENT. INCREASE "D" AND "X" 1" FOR EVERY 1" INCREASE OF PAVEMENT THICKNESS.
7. FOR INLET BLOCKOUT DETAILS SEE SHEET 5.
8. CONTRACTOR SHALL USE A GUTTER DEPRESSION TEMPLATE TO ASSURE PROPER INLET OPENING. CONTRACTOR SHALL FURNISH A TEMPLATE AS PER DETAIL SHEET 5, OR ONE AS APPROVED BY THE ENGINEER.

(2) REINFORCING BAR BENDING DIAGRAM FOR CURB INLET

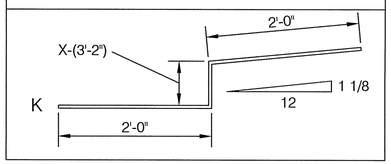

(2)

REINFORCING BAR SCHEDULE

BAR	SIZE	SHAPE	QUANT.	LENGTH
K	4	BENT	10	VARIES

(1)	REVISION 04/20/1983	Kirk R Pfeiff DESIGN ENGINEER
	REVISION 06/29/1972	
	REVISION 02/29/1972	Charles Krajicek CITY ENGINEER
(2)	REVISION 02/01/2008	

CITY OF OMAHA PUBLIC WORKS DEPARTMENT

CURB OPENING INLET TYPE I
WITH TRANSVERSE PIPE

STANDARD PLATE **721**

SHEET 1/5

ISSUE DATE: ... JANUARY 29, 2007

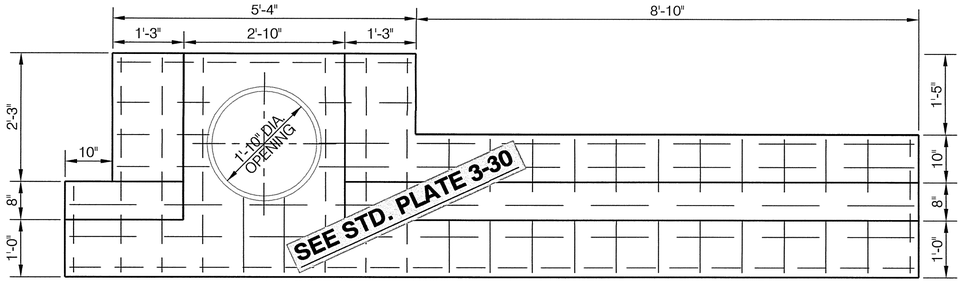

REINFORCED CONCRETE COVER

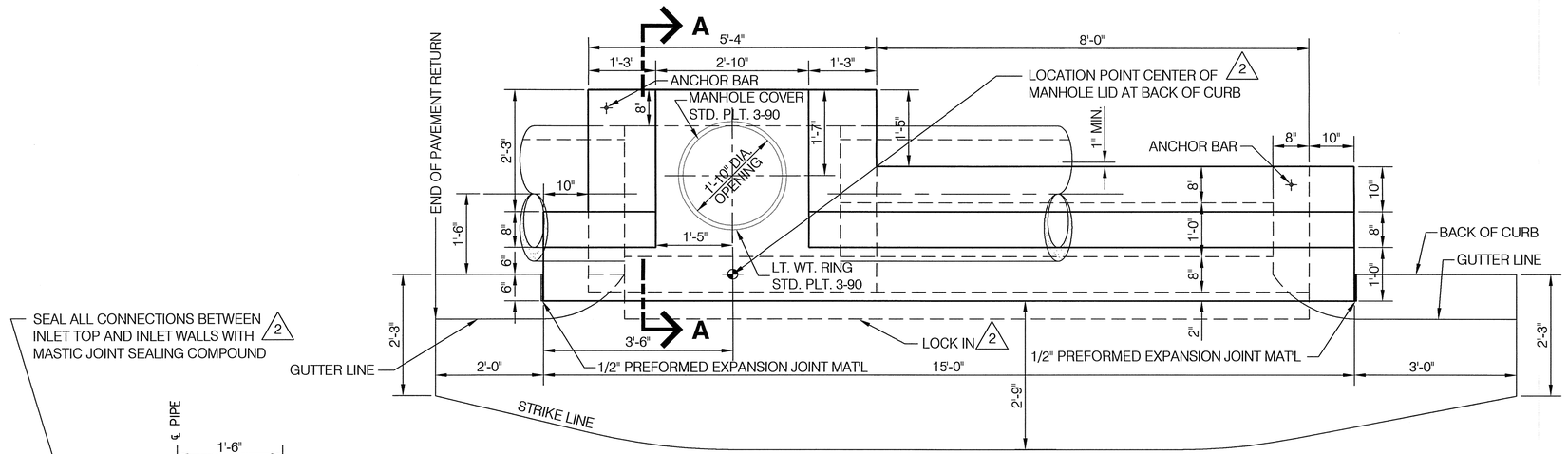

PLAN VIEW

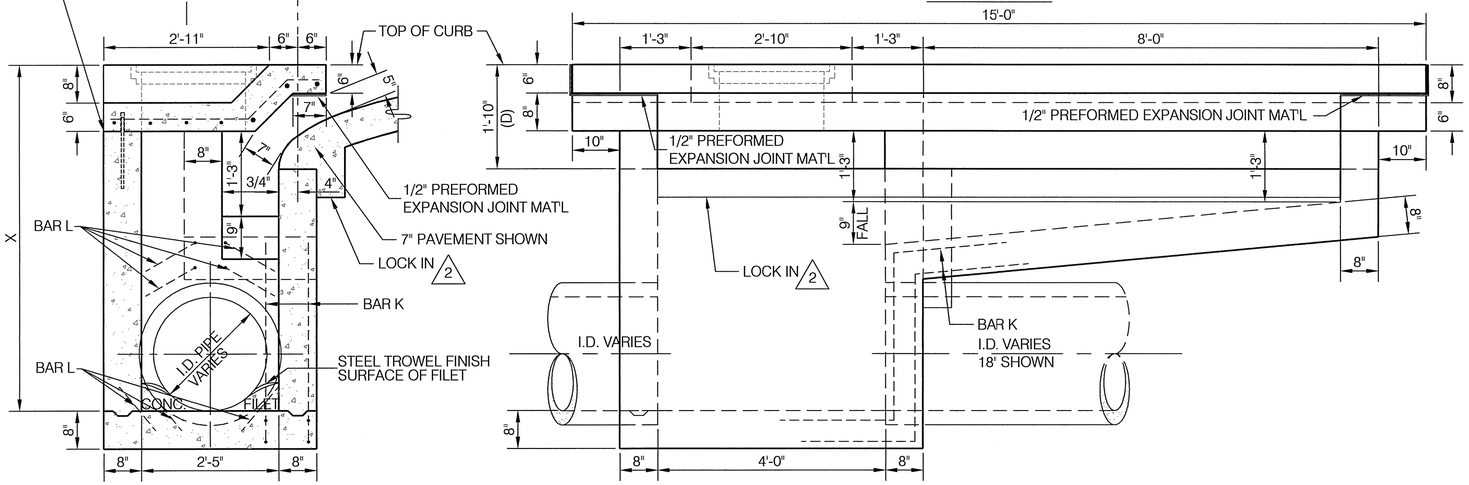

SECTION "A-A"

FRONT ELEVATION

CURB INLET DATA w/7" PAVEMENT					
DIA. OF PIPE	DIMENSIONS X MIN.		D	*CONCRETE CU. YDS.	CONCRETE CU. YDS. DEDUCT FOR EACH PIPE OPENING
12"	5'-0"		1'-10"	3.990	.034
15"	5'-4"		1'-10"	4.118	.051
18"	5'-7"		1'-10"	4.213	.071
24"	6'-1"		1'-10"	4.405	.121
30"	6'-8"		1'-10"	4.628	.185

* ADD .383 CU. YDS. CONCRETE FOR ONE FOOT INCREASE OF "X"

** GALVANIZED OR EPOXY COATED FACE BAR (1)

*** FOR 30" PIPE ONLY, USE 2 K BARS W/6 L BARS IN THE TROUGH AND 4 L BARS IN THE FLOOR.

REINFORCING BAR BENDING DIAGRAM FOR CURB INLET

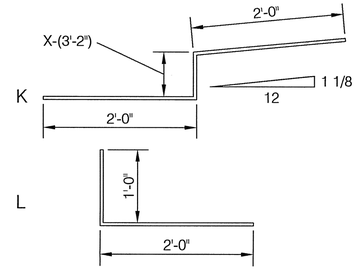

NOTES:

1. INLET DESIGN FOR OUTLET IN STORM SEWER BELOW INLET TROUGH. OTHER INLET LEADS-CONNECT AS SHOWN ON PLANS. FOR OTHER LAYOUTS SEE SHEETS 1 AND 3.
2. ALL CONCRETE SHALL BE CLASS L6AE.
3. ALL EXPOSED EDGES OF CONCRETE SHALL BE CHAMFERED.
4. THE CONCRETE COVER MAY BE CAST IN PLACE OR PRECAST, WITH LT. WT. RING AND COVER (STD. PLT. 3-90).
5. REINFORCING STEEL SHALL BE DEFORMED BARS. THE MINIMUM COVERING, MEASURED FROM THE FACE OF CONCRETE TO THE SURFACE OF ANY REINFORCING BAR SHALL BE 1 1/2 INCHES.
6. "D" AND "X" ARE DESIGNED FOR INLET USE WITH 7" THICK PAVEMENT. INCREASE "D" 1" FOR EVERY 1" INCREASE OF PAVEMENT THICKNESS.
7. FOR INLET BLOCKOUT DETAILS SEE SHEET 5.
8. CONTRACTOR SHALL USE A GUTTER DEPRESSION TEMPLATE TO ASSURE PROPER INLET OPENING. CONTRACTOR SHALL FURNISH A TEMPLATE AS PER DETAIL SHEET 5, OR ONE AS APPROVED BY THE ENGINEER.

REINFORCING BAR SCHEDULE				
BAR	SIZE	SHAPE	QUANT.	LENGTH
K	4	BENT	10	VARIES

2	REVISION 02/01/2008
1	REVISION 04/20/1983
	REVISION 06/29/1972
	REVISION 02/29/1972

Kirk R Pfaff
DESIGN ENGINEER
Charlie Krajicek
CITY ENGINEER

CITY OF OMAHA PUBLIC WORKS DEPARTMENT

CURB OPENING INLET TYPE II
WITH LONGITUDINAL PIPE
PLACED BELOW INLET TROUGH

STANDARD PLATE 721

SHEET 2/5

ISSUE DATE: ... JANUARY 29, 2007

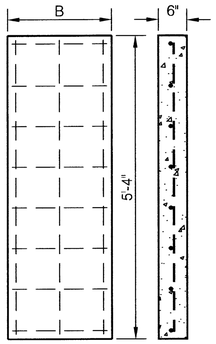

REINF. CONCRETE COVER

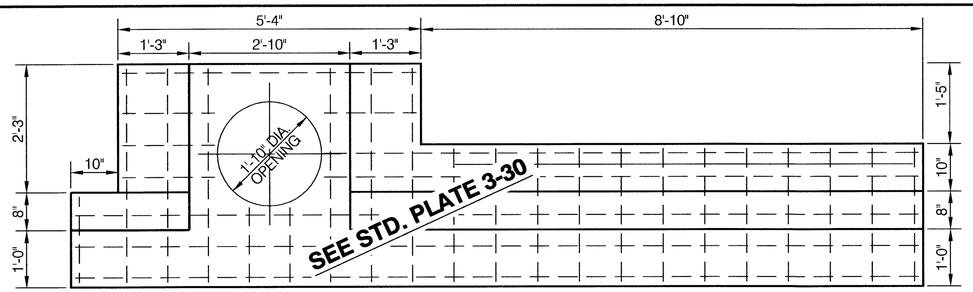

REINFORCED CONCRETE COVER

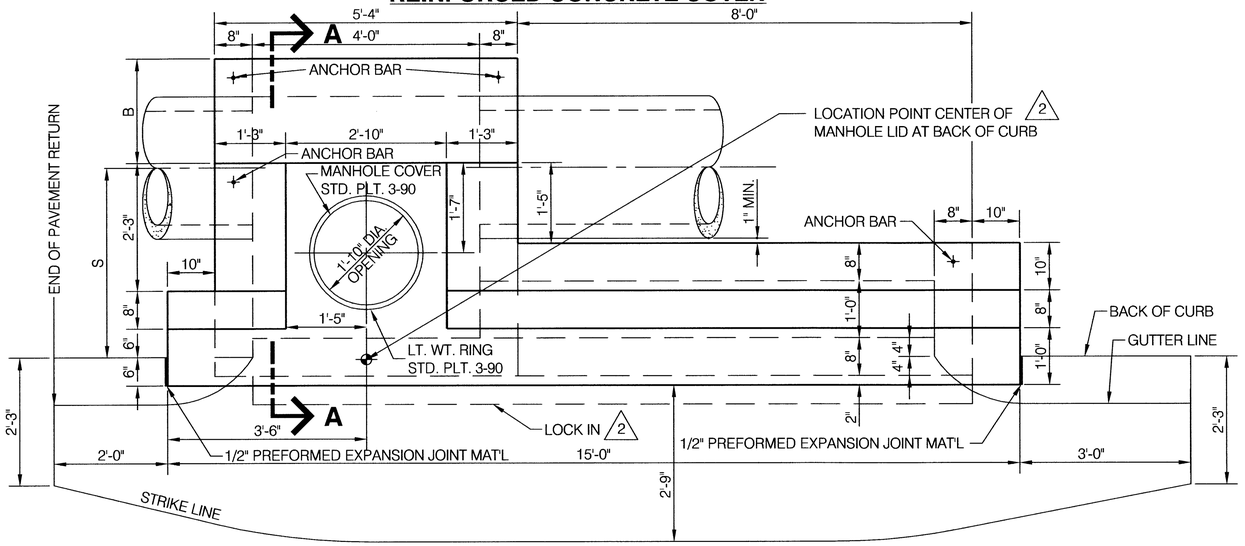

PLAN VIEW

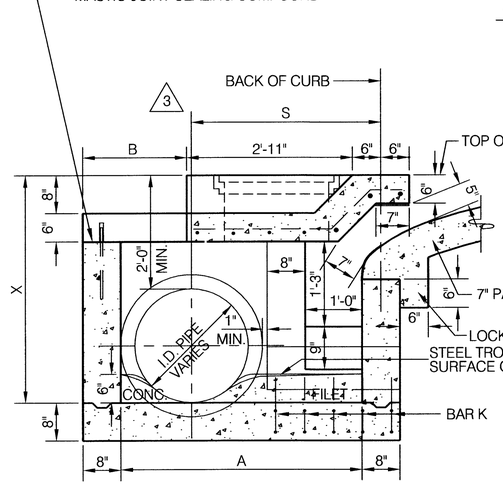

SECTION "A-A"

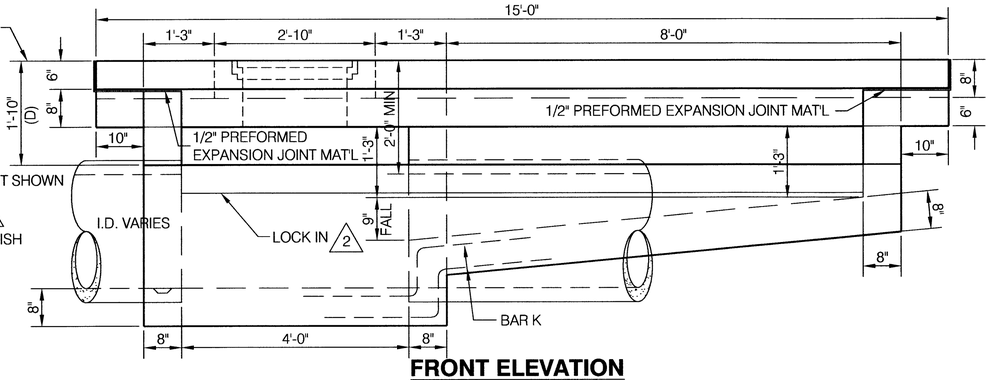

FRONT ELEVATION

REINFORCING BAR BENDING DIAGRAM FOR CURB INLET

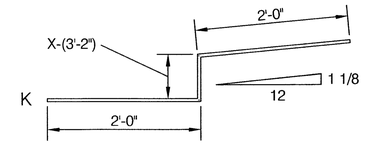

NOTES:

1. INLET DESIGN FOR OUTLET THROUGH FRONT, BACK OR END WALL. FOR OTHER LAYOUTS SEE SHEETS 1 AND 2.
2. 2 ALL CONCRETE SHALL BE CLASS L6AE.
3. ALL EXPOSED EDGES OF CONCRETE SHALL BE CHAMFERED.
4. 2 THE CONCRETE COVER MAY BE CAST IN PLACE OR PRECAST, WITH LT. WT. RING AND COVER (STD. PLT. 3-90).
5. REINFORCING STEEL SHALL BE DEFORMED BARS. THE MINIMUM COVERING, MEASURED FROM THE FACE OF CONCRETE TO THE SURFACE OF ANY REINFORCING BAR SHALL BE 1 1/2 INCHES.
6. "D" AND "X" ARE DESIGNED FOR INLET USE WITH 7" THICK PAVEMENT. INCREASE "D" 1" FOR EVERY 1" INCREASE OF PAVEMENT THICKNESS.
7. FOR INLET BLOCKOUT DETAILS SEE SHEET 5.
8. CONTRACTOR SHALL USE A GUTTER DEPRESSION TEMPLATE TO ASSURE PROPER INLET OPENING. CONTRACTOR SHALL FURNISH A TEMPLATE AS PER DETAIL SHEET 5, OR ONE AS APPROVED BY THE ENGINEER.

CURB INLET DATA w/7" PAVEMENT

DIA. OF PIPE	DIMENSIONS X MIN.	A	B	D	S	*CONCRETE CU. YDS.	CONCRETE CU. YDS. DEDUCT FOR EACH PIPE OPENING	CONCRETE CU. YDS. ADD FOR ONE FOOT INCREASE "X"
18"	3'-6"	3'-8"	1'-3"	1'-10"	3'-1"	3.848	.071	.444
24"	4'-0"	4'-3"	1'-10"	1'-10"	3'-4"	4.286	.121	.473
30"	4'-6"	4'-10"	2'-5"	1'-10"	3'-8"	4.754	.185	.502
36"	5'-0"	5'-5"	3'-0"	1'-10"	3'-11"	5.249	.262	.531
42"	5'-6"	6'-0"	3'-7"	1'-10"	4'-3"	5.774	.352	.560
48"	6'-0"	6'-7"	4'-2"	1'-10"	4'-6"	6.327	.453	.589
54"	6'-6"	7'-2"	4'-9"	1'-10"	4'-10"	6.910	.569	.617
60"	7'-0"	7'-9"	5'-4"	1'-10"	5'-1"	7.521	.698	.646

1 GALVANIZED OR EPOXY COATED BAR

REINFORCING BAR SCHEDULE

BAR	SIZE	SHAPE	QUANT.	LENGTH
K	4	BENT	10	VARIES

3	REVISION 9/23/2010
2	REVISION 02/01/2008
1	REVISION 04/20/1983

DESIGN ENGINEER

PUBLIC WORKS DIRECTOR

CITY OF OMAHA PUBLIC WORKS DEPARTMENT

CURB OPENING INLET TYPE III
WITH LONGITUDINAL PIPE
PLACED BEHIND INLET TROUGH

STANDARD PLATE 721

SHEET 3/5

ISSUE DATE: ... JANUARY 29, 2007

CURB INLET DATA w/7" PAVEMENT

DIA. OF PIPE	DIMENSIONS X MIN.	DIMENSIONS D	*(1) CONCRETE CU. YDS.	CONCRETE CU. YDS. DEDUCT FOR EACH PIPE OPENING
12"	3'-2"	1'-10"	1.768	.034
15"	3'-6"	1'-10"	1.896	.051
18"	3'-9"	1'-10"	1.992	.071
24"	4'-0"	1'-10"	2.183	.121

(1) * ADD. 0.383 CU. YDS. CONCRETE FOR ONE FOOT INCREASE OF "X"

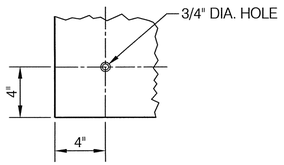

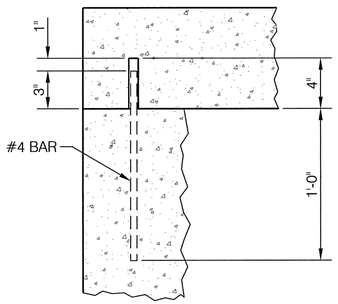

ANCHOR BAR DETAIL

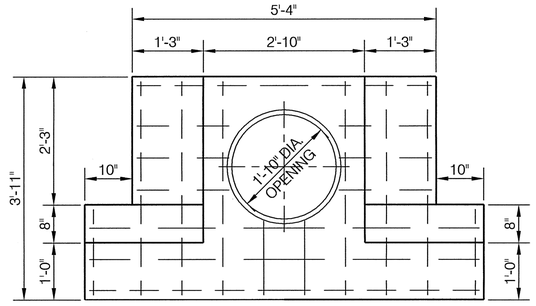

REINFORCED CONCRETE COVER

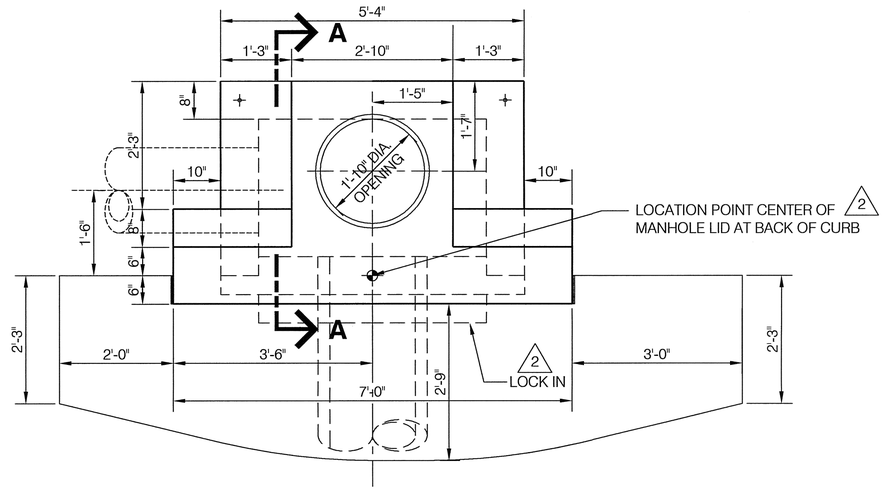

PLAN VIEW

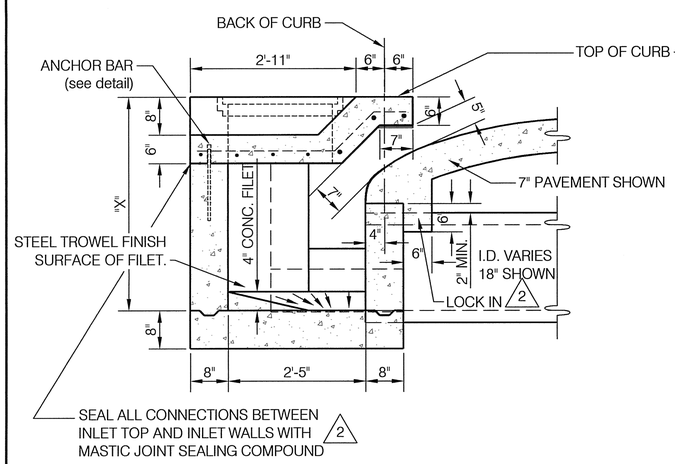

SECTION "A-A"

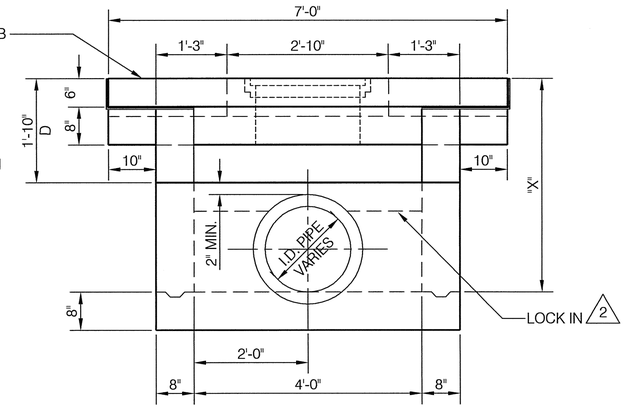

FRONT ELEVATION

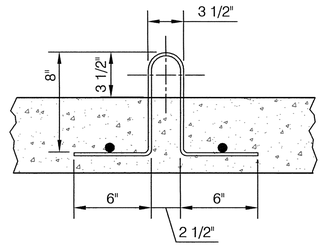

LIFT BAR DETAIL
NO SCALE

NOTES:

1. INLET DESIGN FOR OUTLET THROUGH FRONT, BACK OR END WALL. MINIMUM DEPTH (X) IS REQUIRED TO PLACE PIPE THROUGH FRONT WALL OF INLET.
2. (2) ALL CONCRETE SHALL BE CLASS L6AE.
3. ALL EXPOSED EDGES OF CONCRETE SHALL BE CHAMFERED.
4. (2) THE REINFORCED CONCRETE COVER MAY BE CAST IN PLACE OR PRECAST, WITH LT. WT. RING AND COVER (STD. PLT. 3-90).
5. REINFORCING STEEL SHALL BE DEFORMED BARS. THE MINIMUM COVERING, MEASURED FROM THE FACE OF CONCRETE TO THE SURFACE OF ANY REINFORCING BAR SHALL BE 1 1/2 INCHES.
6. "D" AND "X" ARE DESIGNED FOR INLET USE WITH 7" THICK PAVEMENT. FOR PAVEMENT GREATER THAN 7", INCREASE "D" AND "X" BY 1" FOR EVERY 1" INCREASE OF PAVEMENT THICKNESS.
7. FOR INLET BLOCKOUT DETAILS SEE SHEET 5.
8. CONTRACTOR SHALL USE A GUTTER DEPRESSION TEMPLATE TO ASSURE PROPER INLET OPENING. THE CONTRACTOR SHALL FURNISH A TEMPLATE AS PER DETAIL SHEET 5, OR ONE AS APPROVED BY THE ENGINEER.

(2)	REVISION 02/01/2008	Kirk R Pfeiff — DESIGN ENGINEER
(1)	REVISION 04/20/1983	CITY ENGINEER

CITY OF OMAHA — PUBLIC WORKS DEPARTMENT

CURB OPENING INLET TYPE IV
WITHOUT TROUGH

STANDARD PLATE **721** — SHEET 4/5

ISSUE DATE: ... JANUARY 29, 2007

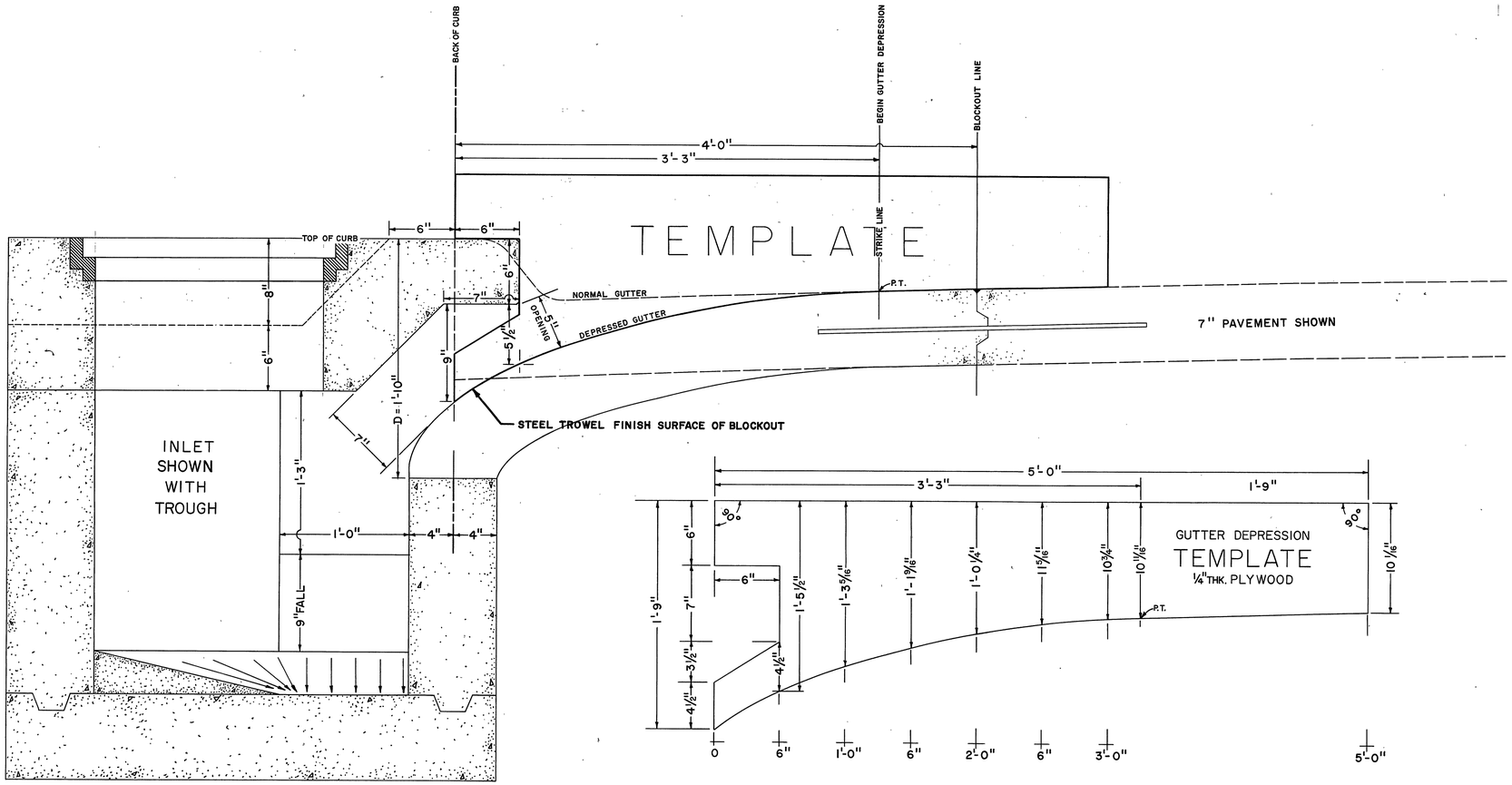

DEPRESSION **TEMPLATE** DETAILS

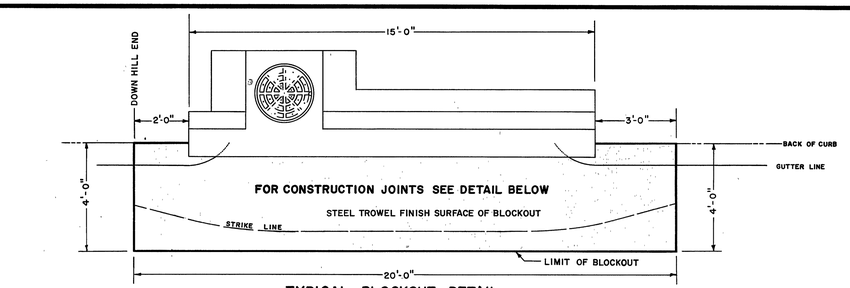

TYPICAL BLOCKOUT DETAIL

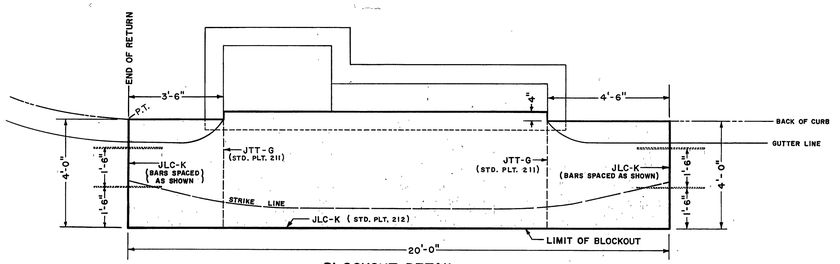

BLOCKOUT DETAIL
SHOWN WITHOUT INLET COVER

CURB INLETS - TYPES I, II & III

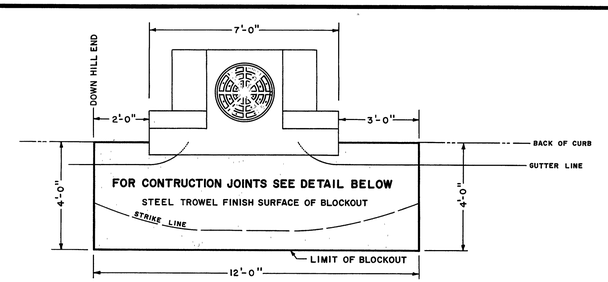

TYPICAL BLOCKOUT DETAIL

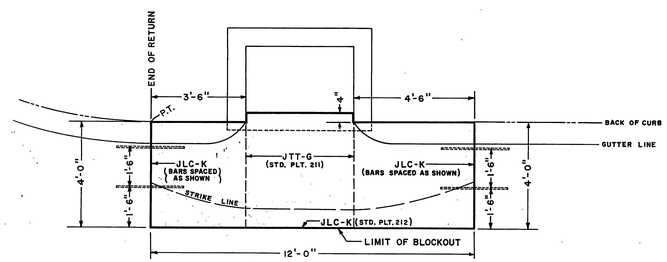

BLOCKOUT DETAIL
SHOWN WITHOUT INLET COVER

CURB INLET - TYPE IV

REVISED: 6-29-72

APPROVED:

DESIGN ENGINEER	2/10/72	DATE
CITY ENGINEER	2/10/72	DATE
PUBLIC WORKS DIRECTOR	2/10/72	DATE

CURB INLET

BLOCKOUT DETAILS
TEMPLATE DETAILS (GUTTER DEPRESSION)

CITY OF OMAHA
PUBLIC WORKS DEPARTMENT

STANDARD PLATE NO. 721

SCALE NO SCALE | Sheet 5 of 5

STANDARD BLUE PRINT, OMAHA 013069

APPROVED:

DESIGN ENGINEER DATE 3-12-20

CITY ENGINEER DATE 3/13/20

PUBLIC WORKS DIRECTOR DATE ——

CITY OF OMAHA
PUBLIC WORKS DEPARTMENT

Concrete Collar Sewer Tap

REVISION	DATE

STANDARD PLATE NO. 723

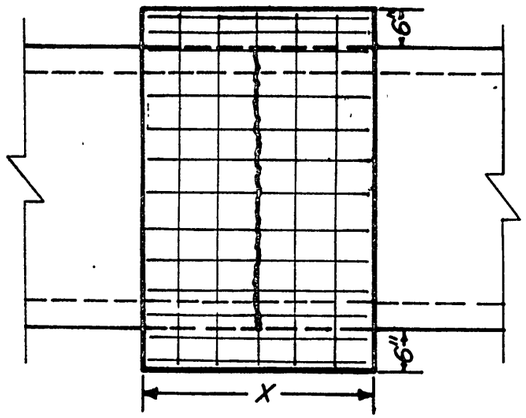

18" thru 30" pipe X = 1' 6"
30" thru 54" pipe X = 2' 0"
54" & larger pipe X = 3' 0"

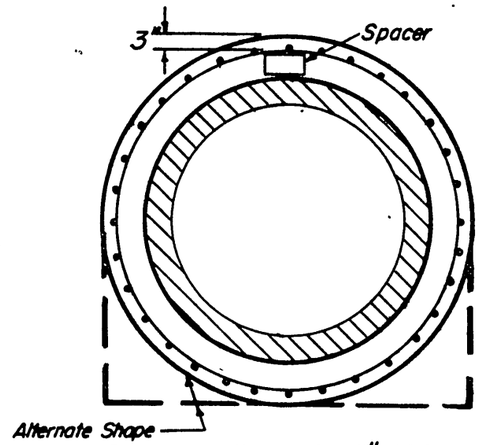

Concrete collar to be 6" thick. Reinforce w/6"x6", 6/6 wire mesh wrapped completely around the pipe and supported with approved spacer. Concrete shall be SG 65 AE or FL 60 AE.

Concrete Collar

D	X	Hoop Bars
18" or smaller	6"	# 3
larger than 18"	9"	# 4

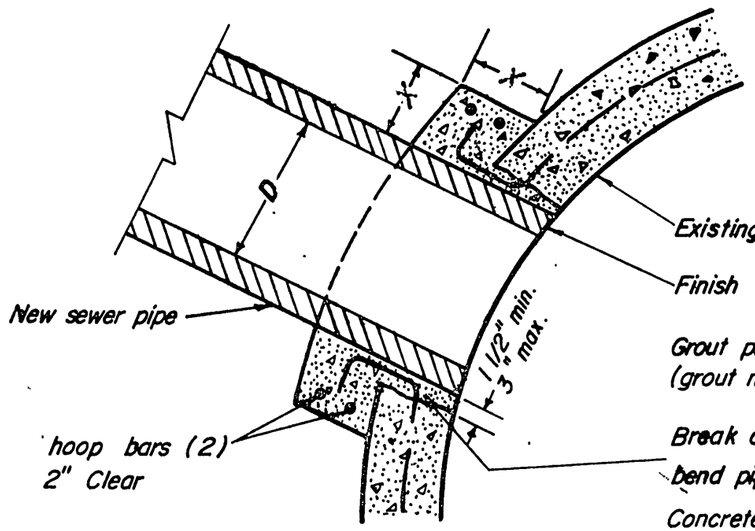

Sewer Tap

APPROVED:

DESIGN ENGINEER DATE 3-12-70

CITY ENGINEER DATE 3/13/70

PUBLIC WORKS DIRECTOR DATE ——

CITY OF OMAHA
PUBLIC WORKS DEPARTMENT

Pipe Plug Detail

REVISION	DATE

STANDARD PLATE NO. 724

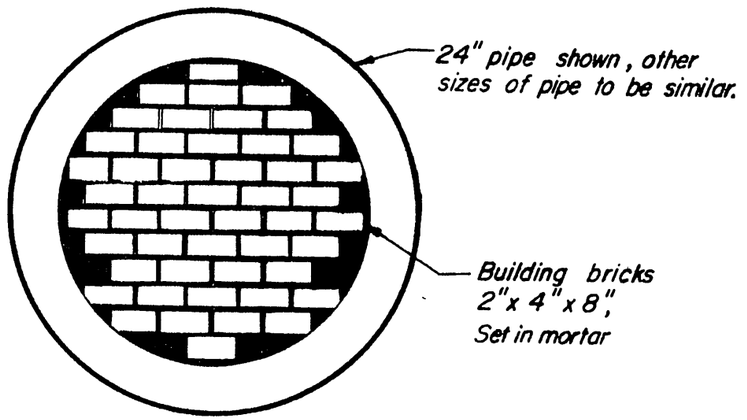

END VIEW
(no scale)

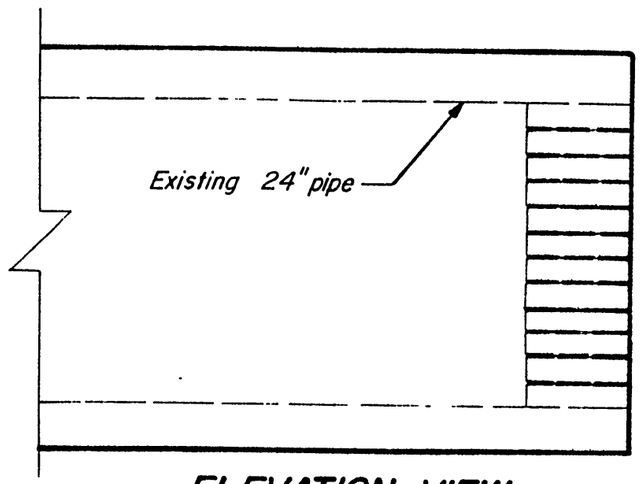

ELEVATION VIEW
(no scale)

12", 15", 18" and 24" pipe, plug with building bricks placed with longest dimension parallel to pipe.
30", 36" and 42" pipe, plug with 8"x8"x16" solid concrete blocks.
48" and larger pipe, plug with 8"x12"x16" solid concrete blocks.

APPROVED:

DESIGN ENGINEER — DATE 3-12-70

CITY ENGINEER — DATE 3/13/70

PUBLIC WORKS DIRECTOR — DATE ——

CITY OF OMAHA
PUBLIC WORKS DEPARTMENT

SANITARY SEWER WATER MAIN CROSSING

REVISION	DATE

STANDARD PLATE NO. 725

SEWER CROSSING OVER WATER MAIN
NO SCALE

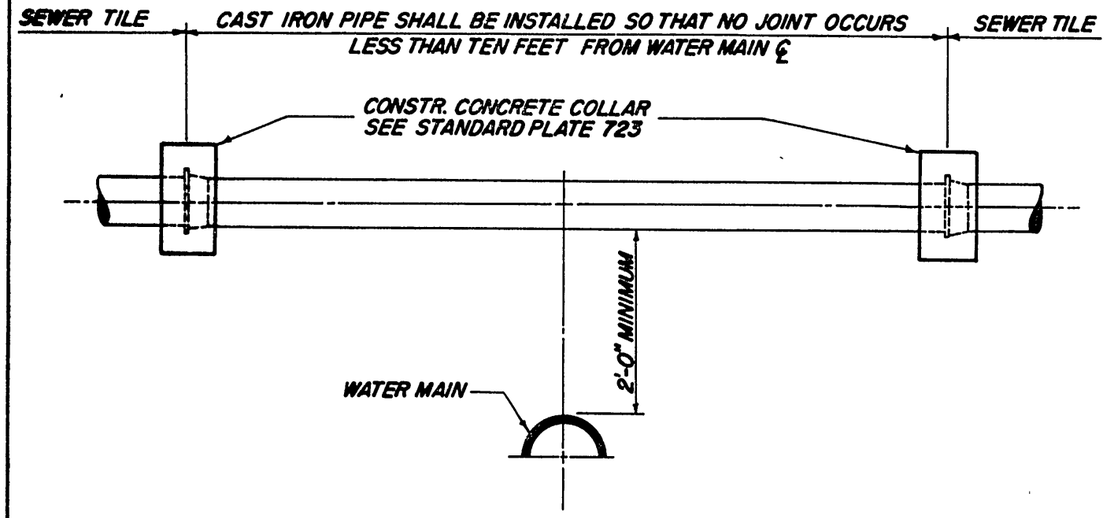

SEWER CROSSING UNDER WATER MAIN
NO SCALE

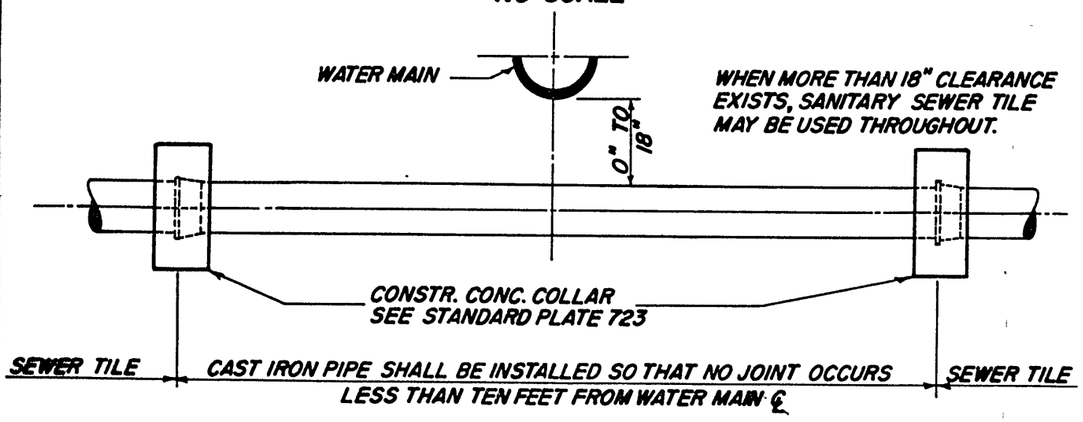

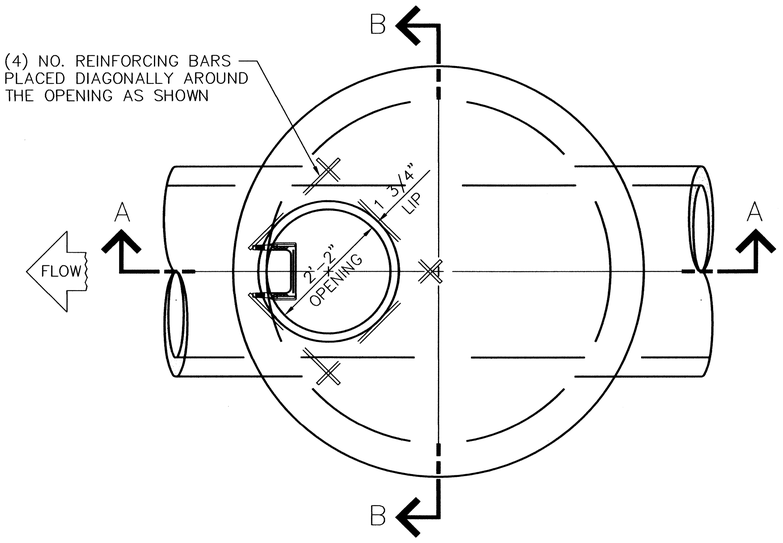

PLAN VIEW

SHOWN WITHOUT RISER SECTION

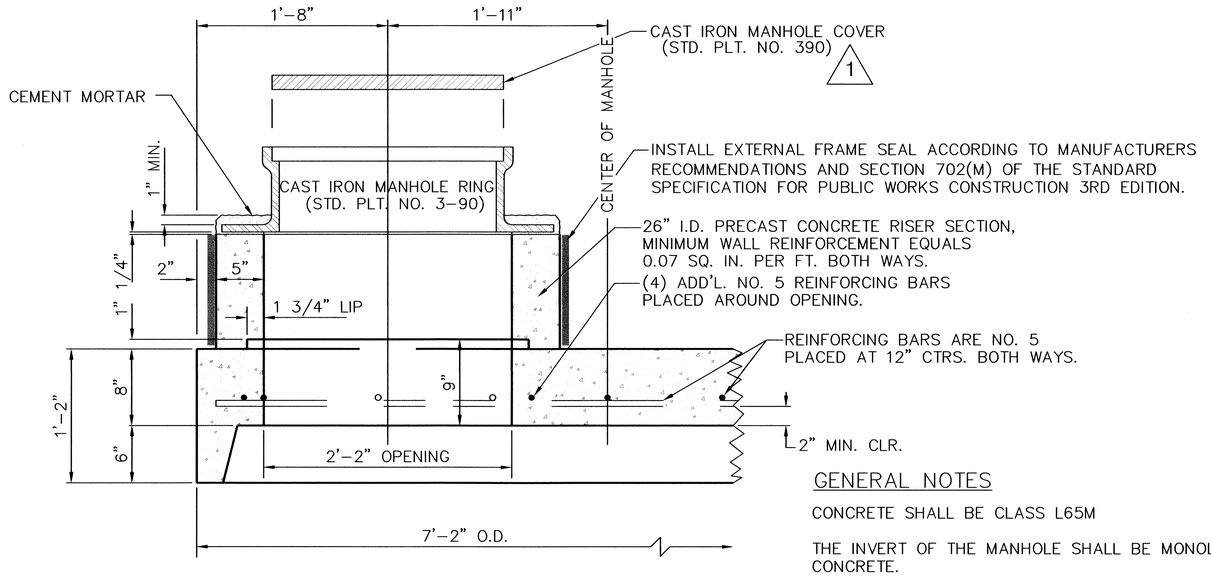

PARTIAL SECTION

REINF. CONCRETE TOP

GENERAL NOTES

CONCRETE SHALL BE CLASS L65M

THE INVERT OF THE MANHOLE SHALL BE MONOLITHICALLY POURED CONCRETE.

WHERE REINFORCING BARS ARE USED, THE STEEL SHALL BE DEFORMED BARS. THE MINIMUM COVERING, MEASURED FROM THE FACE OF CONCRETE TO THE SURFACE OF ANY REINFORCING BAR SHALL BE TWO INCHES UNLESS OTHERWISE NOTED.

PRECAST CONCRETE MANHOLE SECTIONS SHALL BE MANUFACTURED TO COMPLY WITH ALL THE REQUIREMENTS OF THE LATEST A.S.T.M. STANDARD SPECIFICATION, DESIGNATION C478-72, EXCEPT AS NOTED: USE WALL THICKNESS EQUALS SEVEN INCHES.

PRECAST CONCRETE MANHOLE SECTIONS SHALL BE SET IN A FRESH BED OF ORTAR TO MAKE A MORTAR JOINT ONE-EIGHTH INCH THICK, AND SHALL BE POINTED UP INSIDE AND OUT AFTER THE SECTION IS IN PLACE.

THE CAST IRON MANHOLE RING, COVER AND STEPS SHALL BE AS PER CITY OF OMAHA STANDARD PLATE NO. 3-90, UNLESS OTHERWISE NOTED ON THE PLANS. 1

THE CAST IRON MANHOLE RING SHALL BE SET IN BED OF MORTAR, AND CAREFULLY ADJUSTED TO THE EXISTING GRADE.

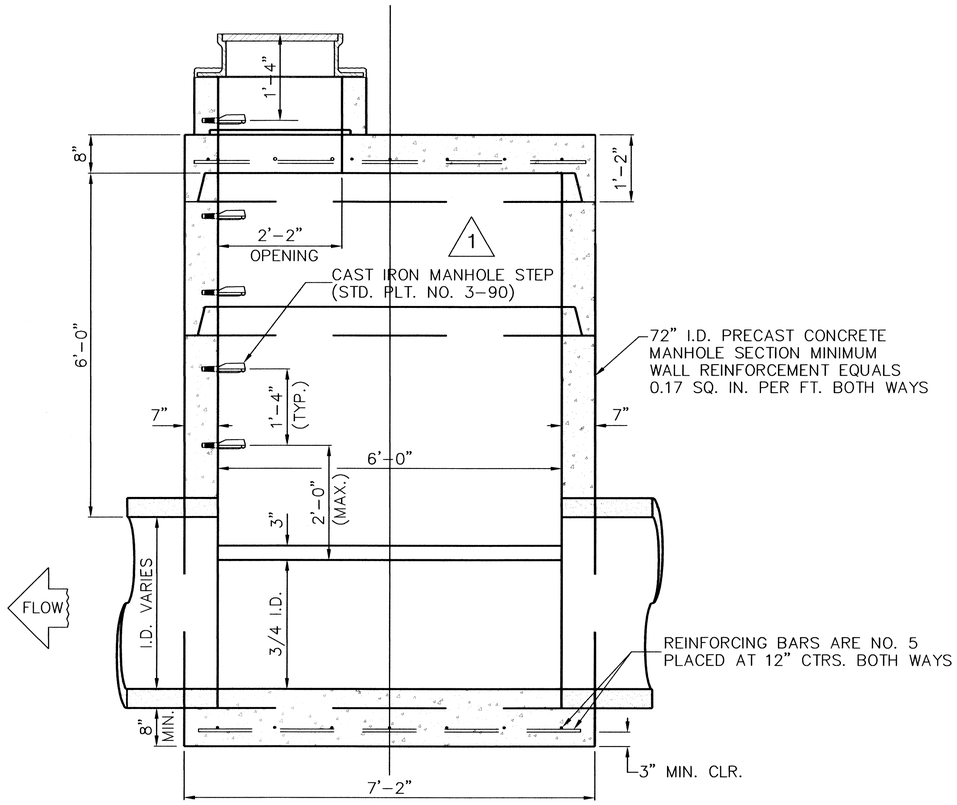

SECTION "A-A"

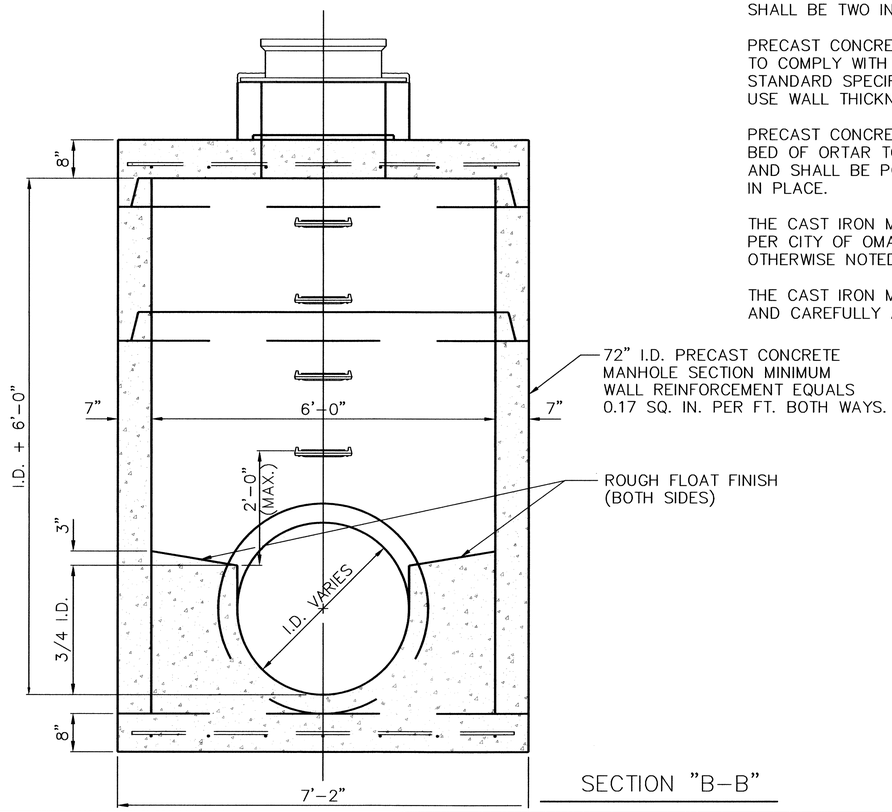

SECTION "B-B"

1	REVISION 02/01/2008	DESIGN ENGINEER / CITY ENGINEER	**CITY OF OMAHA — PUBLIC WORKS DEPARTMENT**
			SANITARY MANHOLE FOR SEWERS 24" THRU 48" (I.D.)
			STANDARD PLATE **739** — SHEET 1/1
			ISSUE DATE: ... FEBRUARY 19, 1973

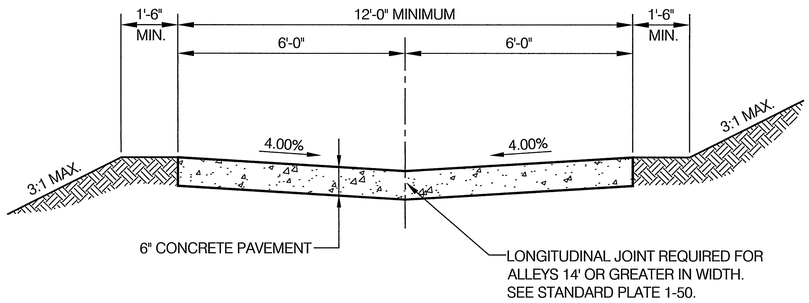

ALLEY PAVEMENT SECTION RESIDENTIAL TYPE

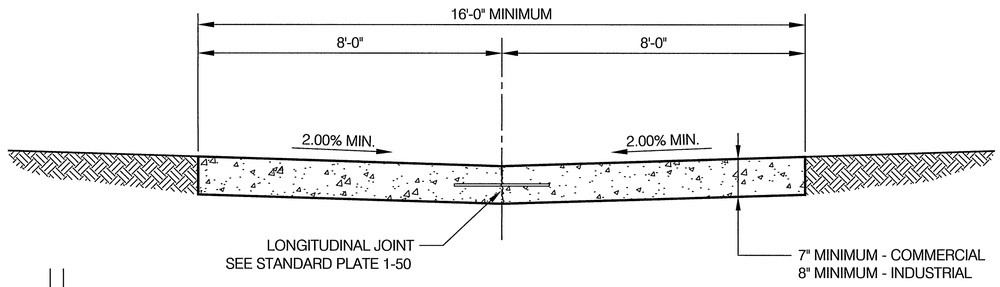

ALLEY PAVEMENT SECTION COMMERCIAL / INDUSTRIAL TYPE

ALLEY PLAN AT RETURN

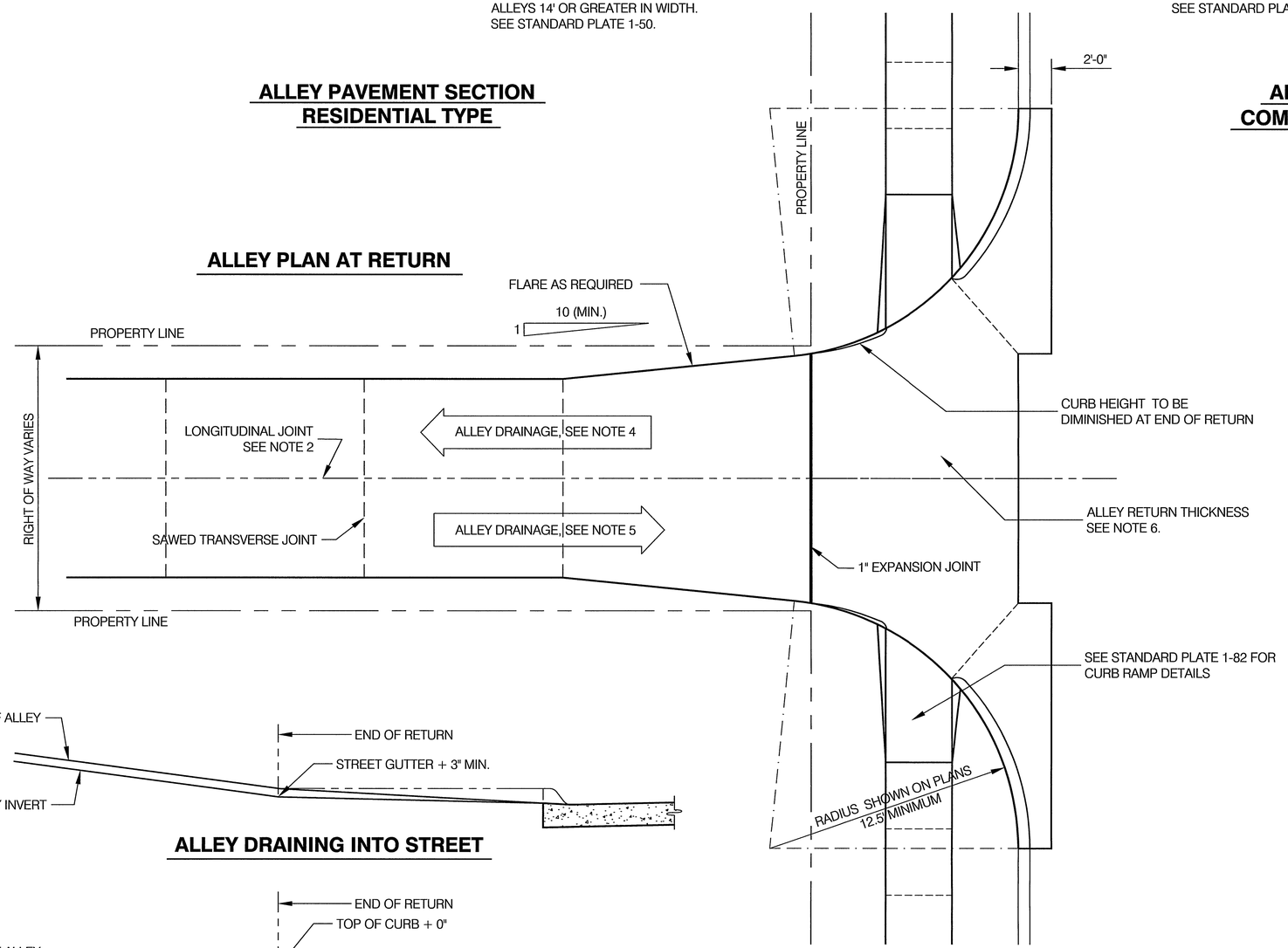

ALLEY DRAINING INTO STREET

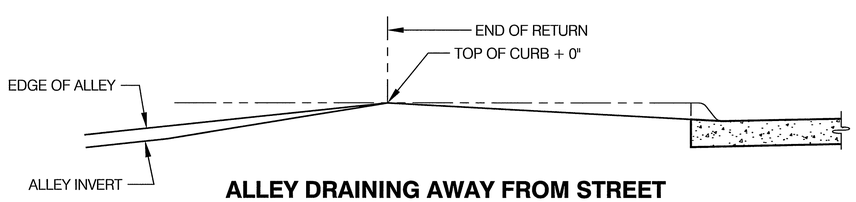

ALLEY DRAINING AWAY FROM STREET

NOTES

1. CONSTRUCT CONCRETE PAVEMENTS IN ACCORDANCE WITH SECTION 500 OF THE STANDARD SPECIFICATIONS.
2. A LONGITUDINAL JOINT IS REQUIRED ON PAVEMENTS 14' OR GREATER IN WIDTH. SEE STANDARD PLATES 1-50 FOR JOINT DETAILS.
3. SAWED TRANSVERSE JOINTS SHALL BE SPACED AS FOLLOWS:
   6" THICKNESS..... 12' MAXIMUM
   7" THICKNESS..... 15' MAXIMUM
   8" THICKNESS..... 15' MAXIMUM
4. ALLEYS DRAINING AWAY FROM THE STREET SHALL HAVE ALLEY RETURN CONSTRUCTED WITHOUT INVERT AND ELEVATION AT THE END OF RETURN SHALL EQUAL THE STREET GUTTER PLUS 6".
5. ALLEYS DRAINING INTO THE STREET SHALL HAVE ALLEY RETURN CONSTRUCTED WITH THE INVERT FLOW LINE AT THE END OF RETURN EQUAL TO THE STREET GUTTER PLUS 3" MINIMUM.
6. ALLEY RETURN THICKNESS SHALL MATCH THICKNESS OF PAVEMENT BUT SHALL NOT BE LESS THAN 7".

DESIGN ENGINEER

CITY ENGINEER

CITY OF OMAHA PUBLIC WORKS DEPARTMENT

CONCRETE ALLEY PAVEMENT

STANDARD PLATE **1-01**

SHEET 1/1

ISSUE DATE: ..... MARCH 26, 2003

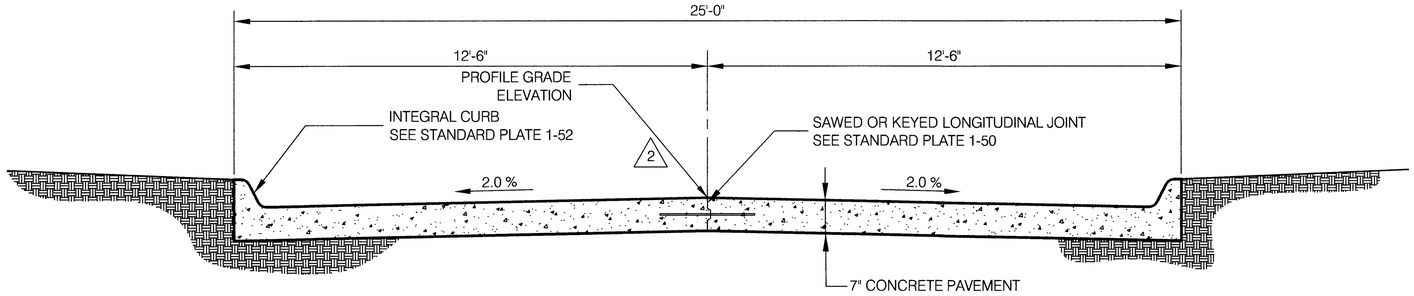

TYPICAL SECTION
25' RESIDENTIAL CONCRETE PAVEMENT

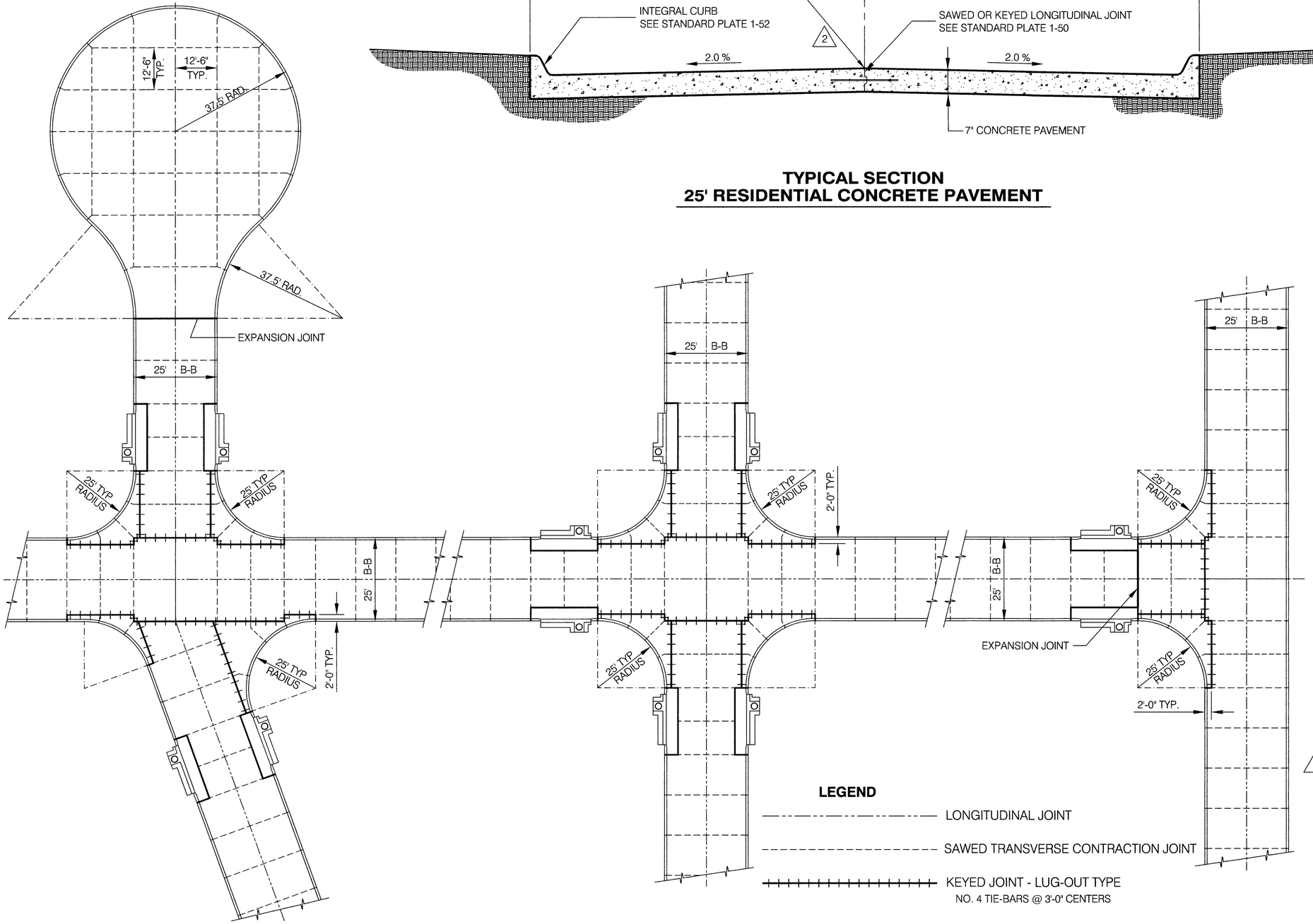

LEGEND

- LONGITUDINAL JOINT
- SAWED TRANSVERSE CONTRACTION JOINT
- KEYED JOINT - LUG-OUT TYPE
  NO. 4 TIE-BARS @ 3'-0" CENTERS

NOTES

1. CONSTRUCT CONCRETE PAVEMENT IN ACCORDANCE WITH SECTION 500 OF THE STANDARD SPECIFICATIONS.
2. SEE STANDARD PLATE 1-50 FOR JOINT DETAILS.
3. WHEN BOTH LANES ARE PLACED AT THE SAME TIME THE LONGITUDINAL JOINT SHALL BE THE SAWED TYPE. THE KEYED TYPE LONGITUDINAL JOINT SHALL BE USED WHEN AN ADJACENT LANE IS NOT PLACED AT THE SAME TIME.
4. (1) MAXIMUM SPACING FOR SAWED TRANSVERSE CONTRACTION JOINTS SHALL BE 12'.
5. TRANSVERSE JOINTS SHALL BE ALIGNED TO COINCIDE WITH THE CENTERLINE OF INTERSECTING SIDE STREETS WHEREVER POSSIBLE.
6. ALL SAWED TRANSVERSE JOINTS SHALL BE CONTINUOUS ACROSS THE PAVEMENT AND EXTEND THROUGH CURBS.

(1) **TYPICAL JOINT PLAN**

1	REVISION 02/01/2008	
2	REVISION 9/23/2010	

DESIGN ENGINEER

PUBLIC WORKS DIRECTOR

CITY OF OMAHA PUBLIC WORKS DEPARTMENT

25'-0" RESIDENTIAL CONCRETE PAVEMENT

STANDARD PLATE 1-10 SHEET 1/1

ISSUE DATE: ..... MARCH 27, 2006

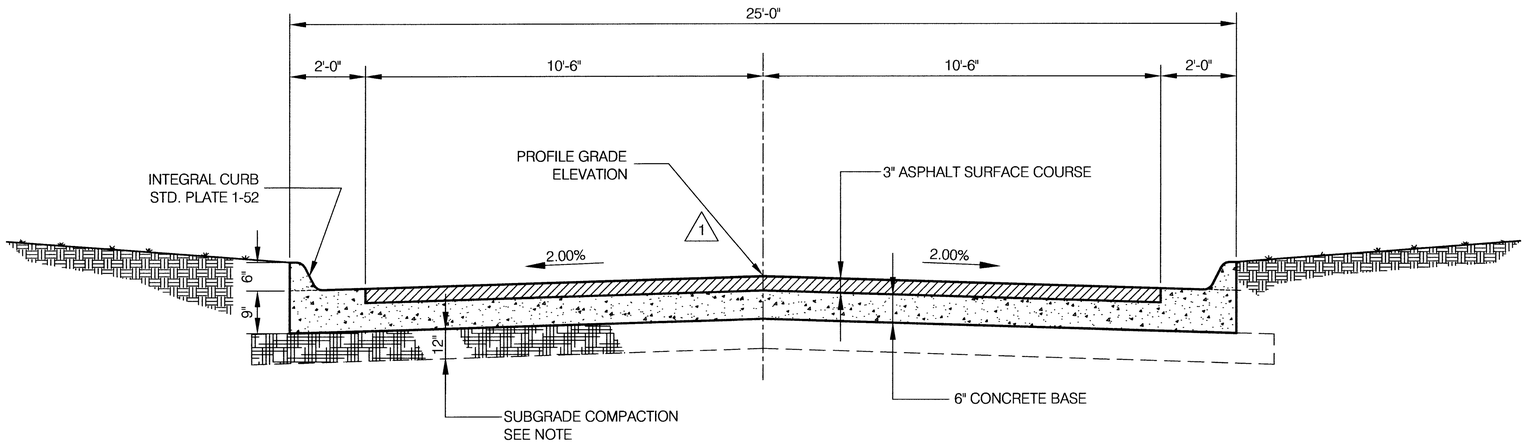

TYPICAL SECTION
25' RESIDENTIAL PAVEMENT
CONCRETE BASE w/ ASPHALT SURFACE

NOTES

CONCRETE BASE COURSE w/ ASPHALT SURFACE TYPE PAVEMENT

1. CONSTRUCT CONCRETE BASE COURSE IN ACCORDANCE WITH SECTION 500 OF THE STANDARD SPECIFICATIONS. BITUMINOUS SURFACING SHALL CONFORM TO SECTION 400.
2. SUBGRADE SHALL CONFORM TO THE REQUIREMENTS OF SECTION 202 OF THE STANDARD SPECIFICATIONS.

ASPHALTIC CONCRETE TYPE PAVEMENT

1. SUBGRADE REQUIREMENTS:
   THE UPPER 12 INCHES OF THE SUBGRADE SHALL BE COMPACTED TO A MINIMUM DENSITY OF 92% (MODIFIED EFFORT) WITH OPTIMUM MOISTURE CONTENT TO -3%, +4% OF OPTIMUM MOISTURE CONTENT AS DETERMINED BY ASTM D1557. COMPACTION OF SUBGRADE SOILS SHALL BE PERFORMED IN LAYERS NOT TO EXCEED 6 INCHES.

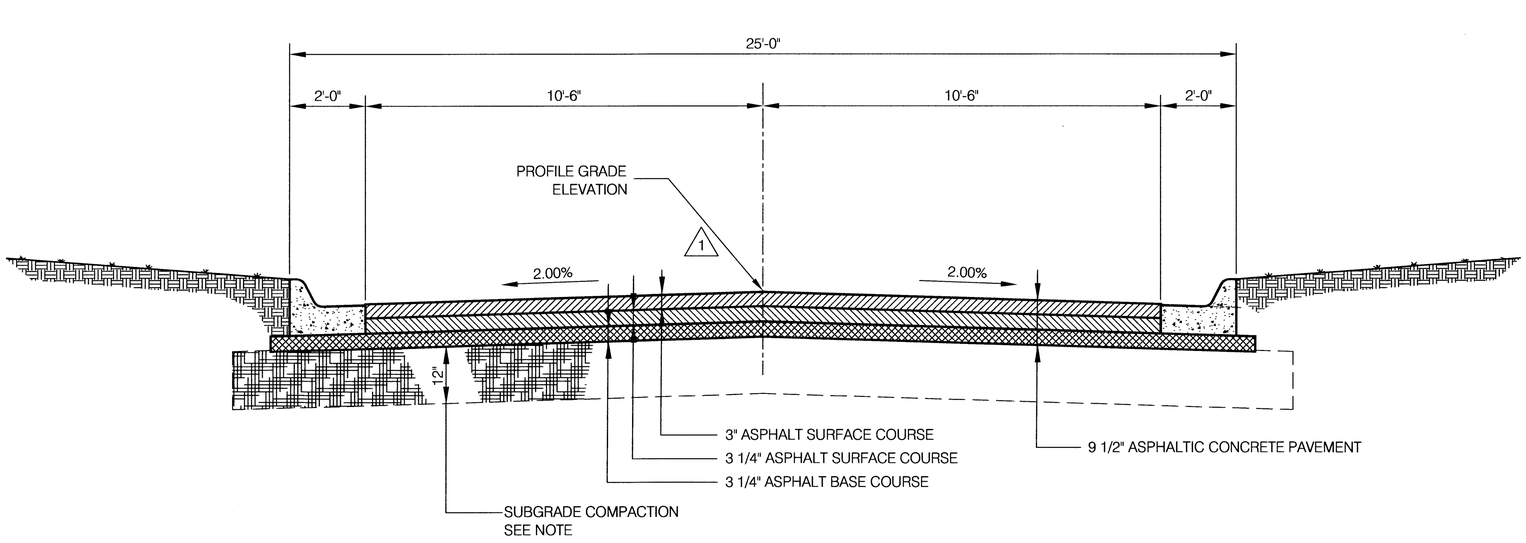

TYPICAL SECTION
25' RESIDENTIAL ASPHALTIC CONCRETE PAVEMENT

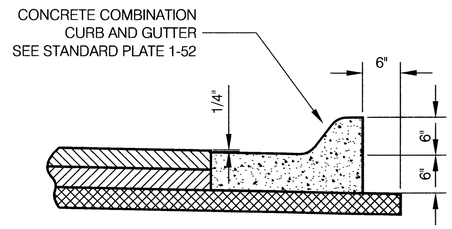

DETAIL AT CURB AND GUTTER

1 REVISION 09/23/2010	DESIGN ENGINEER PUBLIC WORKS DIRECTOR	CITY OF OMAHA PUBLIC WORKS DEPARTMENT 25'-0" RESIDENTIAL ASPHALTIC CONCRETE PAVEMENT SECTIONS STANDARD PLATE 1-12 SHEET 1/1 ISSUE DATE: ..... MARCH 26, 2003

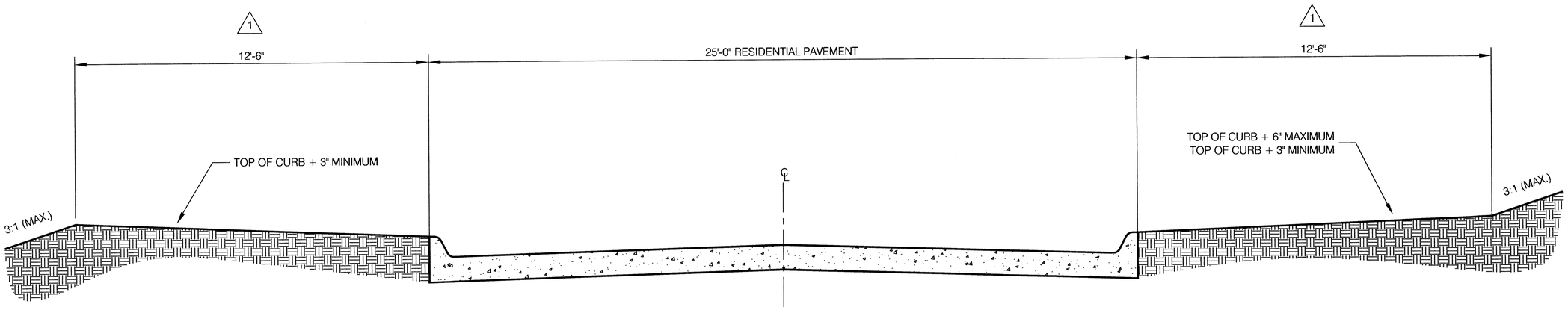

TYPICAL GRADING SECTION
5'-0" SIDEWALK WITH 6'-6" SETBACK

1

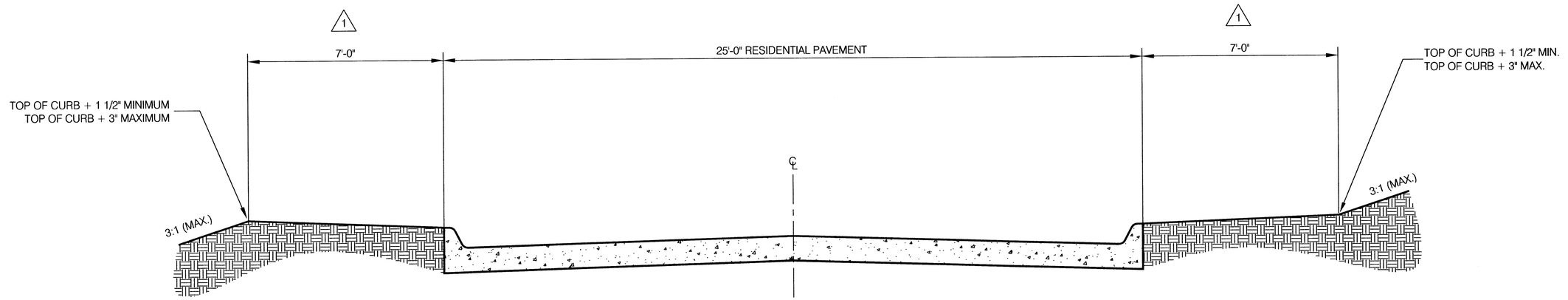

1

TYPICAL GRADING SECTION FOR 6'-0" CURBWALK

1	REVISION 9/23/2010	Kirk R Pfatt DESIGN ENGINEER Robert J Stubbe PUBLIC WORKS DIRECTOR	CITY OF OMAHA PUBLIC WORKS DEPARTMENT **RESIDENTIAL GRADING SECTIONS WITHOUT SIDEWALK CONSTRUCTION**	**STANDARD PLATE 1-13** ISSUE DATE: ..... MARCH 26, 2003	SHEET 1/1

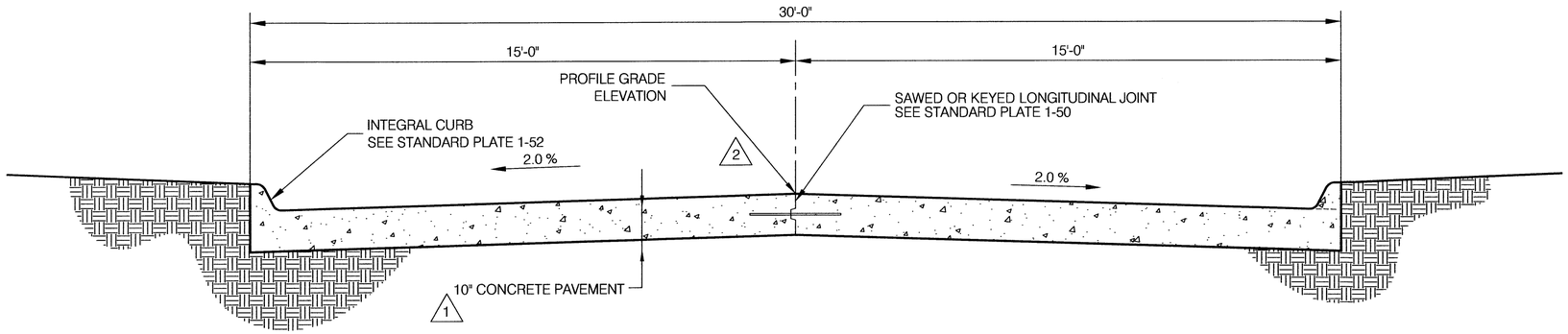

TYPICAL SECTION
30' INDUSTRIAL CONCRETE PAVEMENT

NOTES

1. CONSTRUCT CONCRETE PAVEMENT IN ACCORDANCE WITH SECTION 500 OF THE STANDARD SPECIFICATIONS.
2. SEE STANDARD PLATE 1-50 FOR JOINT DETAILS.
3. WHEN BOTH LANES ARE PLACED AT THE SAME TIME THE LONGITUDINAL JOINT SHALL BE THE SAWED TYPE. THE KEYED TYPE LONGITUDINAL JOINT SHALL BE USED WHEN AN ADJACENT LANE IS NOT PLACED AT THE SAME TIME.
4. MAXIMUM SPACING FOR SAWED TRANSVERSE CONTRACTION JOINTS SHALL BE 12'.
5. TRANSVERSE JOINTS SHALL BE ALIGNED TO COINCIDE WITH THE CENTERLINE OF INTERSECTING SIDE STREETS WHEREVER POSSIBLE.
6. ALL SAWED TRANSVERSE JOINTS SHALL BE CONTINUOUS ACROSS THE PAVEMENT AND EXTEND THROUGH CURBS.

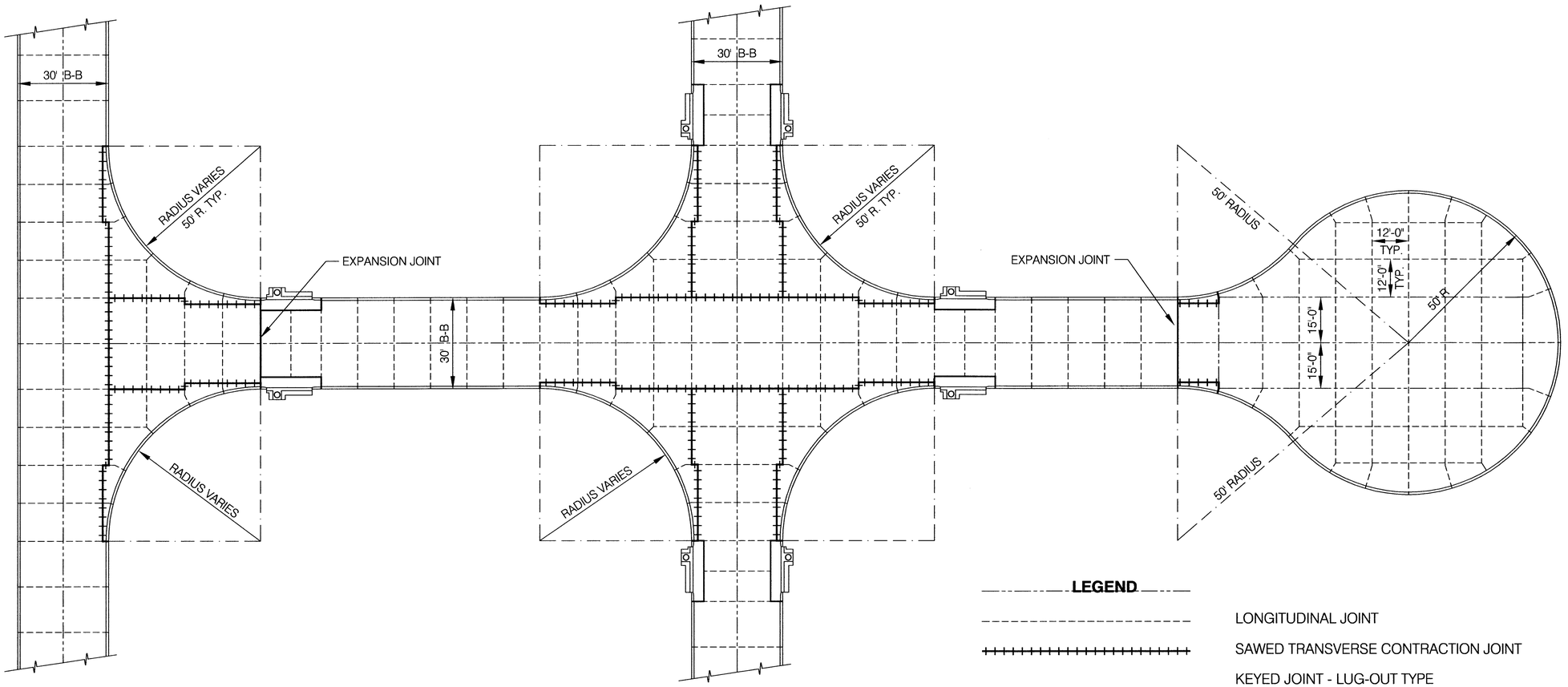

TYPICAL JOINT PLAN

1	REVISION 01/27/2009
2	REVISION 9/23/2010

DESIGN ENGINEER

PUBLIC WORKS DIRECTOR

CITY OF OMAHA PUBLIC WORKS DEPARTMENT

30'-0" INDUSTRIAL CONCRETE PAVEMENT

STANDARD PLATE 1-16

SHEET 1 / 1

ISSUE DATE: ..... JANUARY 27, 2009

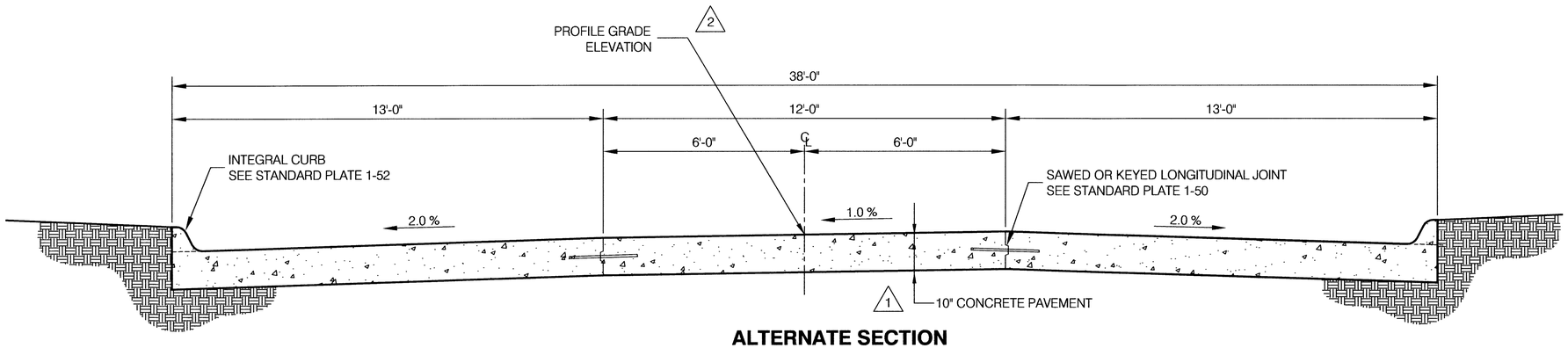

ALTERNATE SECTION
38' - 3 LANE CONCRETE PAVEMENT

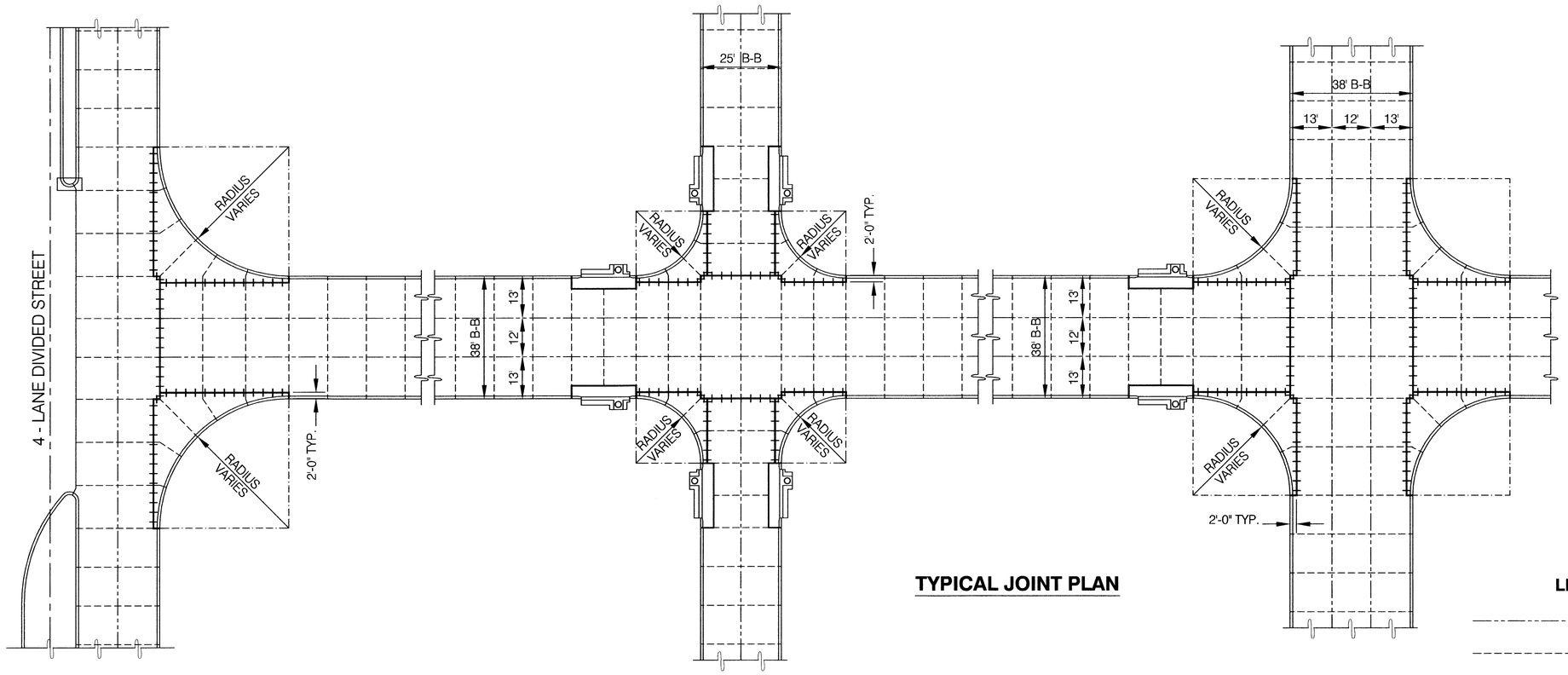

TYPICAL JOINT PLAN

NOTES

1. CONSTRUCT CONCRETE PAVEMENT IN ACCORDANCE WITH SECTION 500 OF THE STANDARD SPECIFICATIONS.
2. SEE STANDARD PLATE 1-50 FOR JOINT DETAILS.
3. WHEN ADJACENT LANES ARE PLACED AT THE SAME TIME THE LONGITUDINAL JOINT SHALL BE THE SAWED TYPE. THE KEYED TYPE LONGITUDINAL JOINT SHALL BE USED WHEN AN ADJACENT LANE IS NOT PLACED AT THE SAME TIME.
4. MAXIMUM SPACING FOR SAWED TRANSVERSE CONTRACTION JOINTS SHALL BE 12'.
5. TRANSVERSE JOINTS SHALL BE ALIGNED TO COINCIDE WITH THE CENTERLINE OF INTERSECTING SIDE STREETS WHEREVER POSSIBLE.
6. ALL SAWED TRANSVERSE JOINTS SHALL BE CONTINUOUS ACROSS THE PAVEMENT AND EXTEND THROUGH CURBS.

LEGEND

- LONGITUDINAL JOINT
- SAWED TRANSVERSE CONTRACTION JOINT
- KEYED JOINT - LUG-OUT TYPE
  NO.4 TIE-BARS AT 3'-0" CENTERS

1	REVISION 01/27/2009	DESIGN ENGINEER	CITY OF OMAHA PUBLIC WORKS DEPARTMENT
2	REVISION 9/23/2010	PUBLIC WORKS DIRECTOR	38'-0"....3 LANE CONCRETE PAVEMENT
			STANDARD PLATE 1-20 SHEET 1/1
			ISSUE DATE: ..... JANUARY 27, 2009

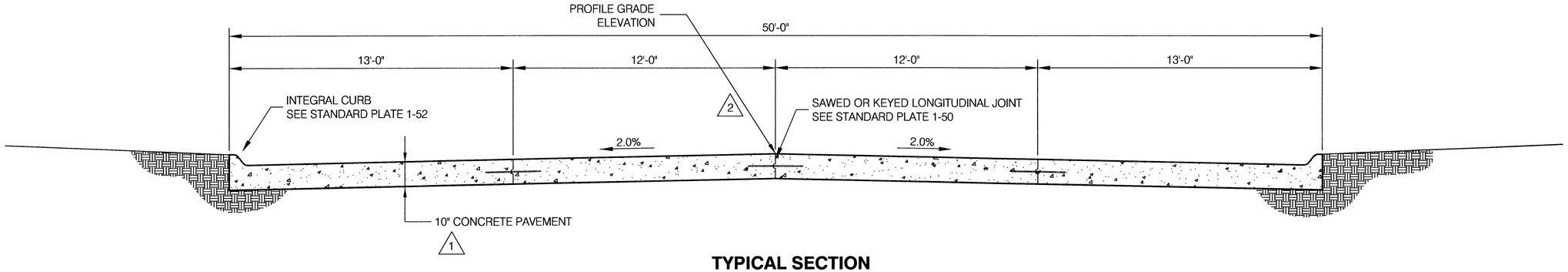

TYPICAL SECTION
50'-0" - 4 LANE CONCRETE PAVEMENT

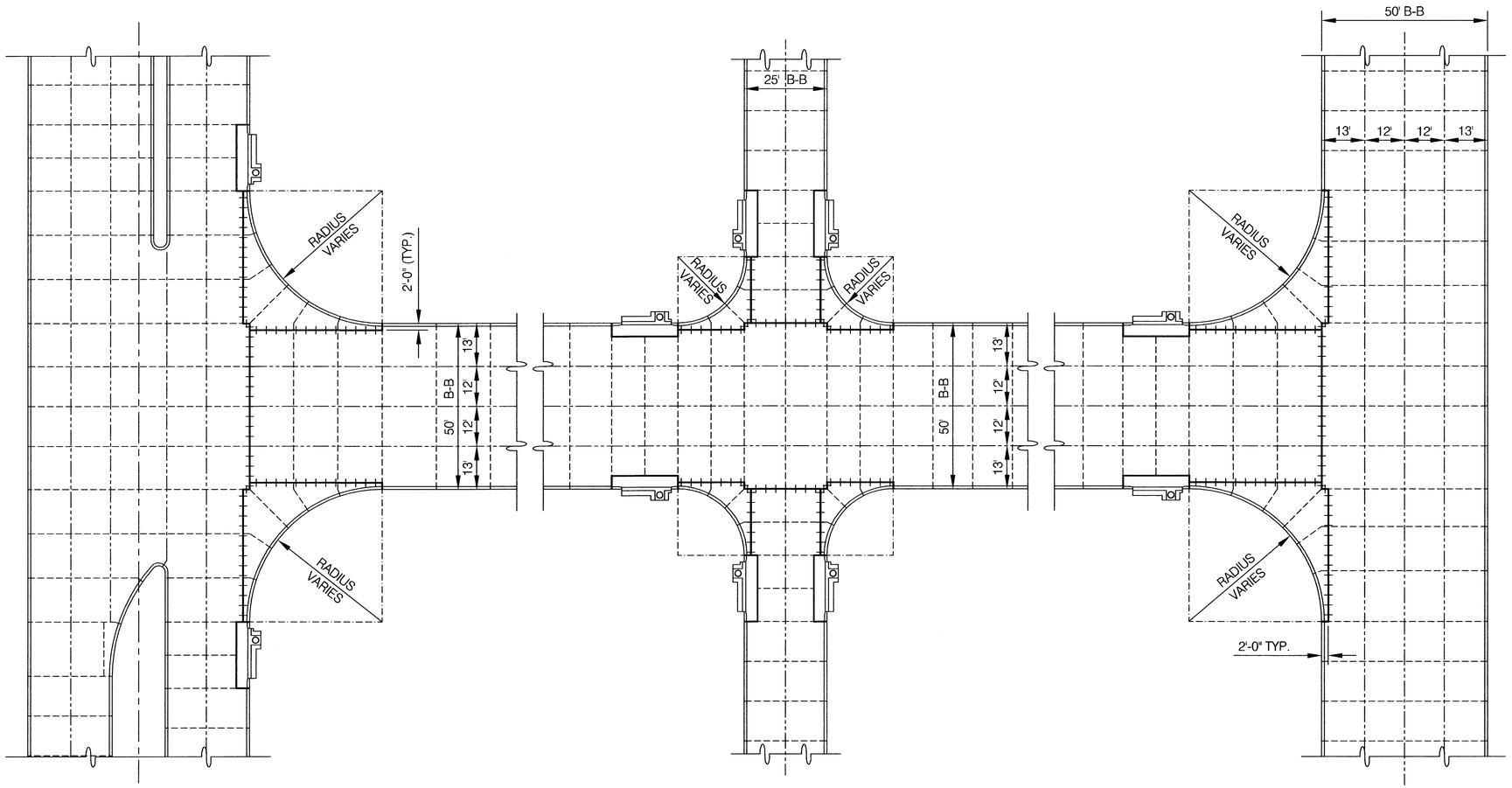

TYPICAL JOINT PLAN

NOTES

1. CONSTRUCT CONCRETE PAVEMENT IN ACCORDANCE WITH SECTION 500 OF THE STANDARD SPECIFICATIONS.
2. SEE STANDARD PLATE 1-50 FOR JOINT DETAILS.
3. WHEN BOTH LANES ARE PLACED AT THE SAME TIME THE LONGITUDINAL JOINT SHALL BE THE SAWED TYPE. THE KEYED TYPE LONGITUDINAL JOINT SHALL BE USED WHEN AN ADJACENT LANE IS NOT PLACED AT THE SAME TIME.
4. MAXIMUM SPACING FOR SAWED TRANSVERSE CONTRACTION JOINTS SHALL BE 12'.
5. TRANSVERSE JOINTS SHALL BE ALIGNED TO COINCIDE WITH THE CENTERLINE OF INTERSECTING SIDE STREETS WHEREVER POSSIBLE.
6. ALL SAWED TRANSVERSE JOINTS SHALL BE CONTINUOUS ACROSS THE PAVEMENT AND EXTEND THROUGH CURBS.

LEGEND

- LONGITUDINAL JOINT
- SAWED TRANSVERSE CONTRACTION JOINT
- KEYED JOINT - LUG-OUT TYPE
  NO.4 TIE-BARS AT 3'-0" CENTERS

1	REVISION 01/27/2009	
2	REVISION 9/23/2010	

DESIGN ENGINEER

PUBLIC WORKS DIRECTOR

CITY OF OMAHA PUBLIC WORKS DEPARTMENT

50'-0" .... 4 LANE CONCRETE PAVEMENT

STANDARD PLATE 1-30

SHEET 1 / 1

ISSUE DATE: ..... JANUARY 27, 2009

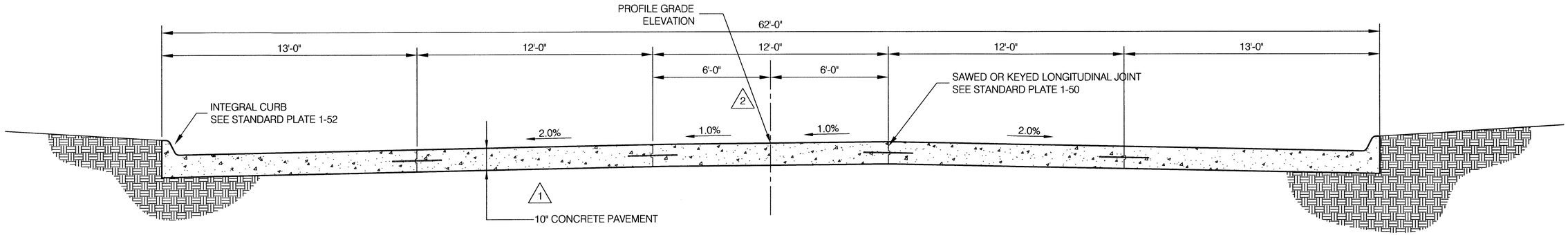

TYPICAL SECTION
62'-0" - 5 LANE CONCRETE PAVEMENT

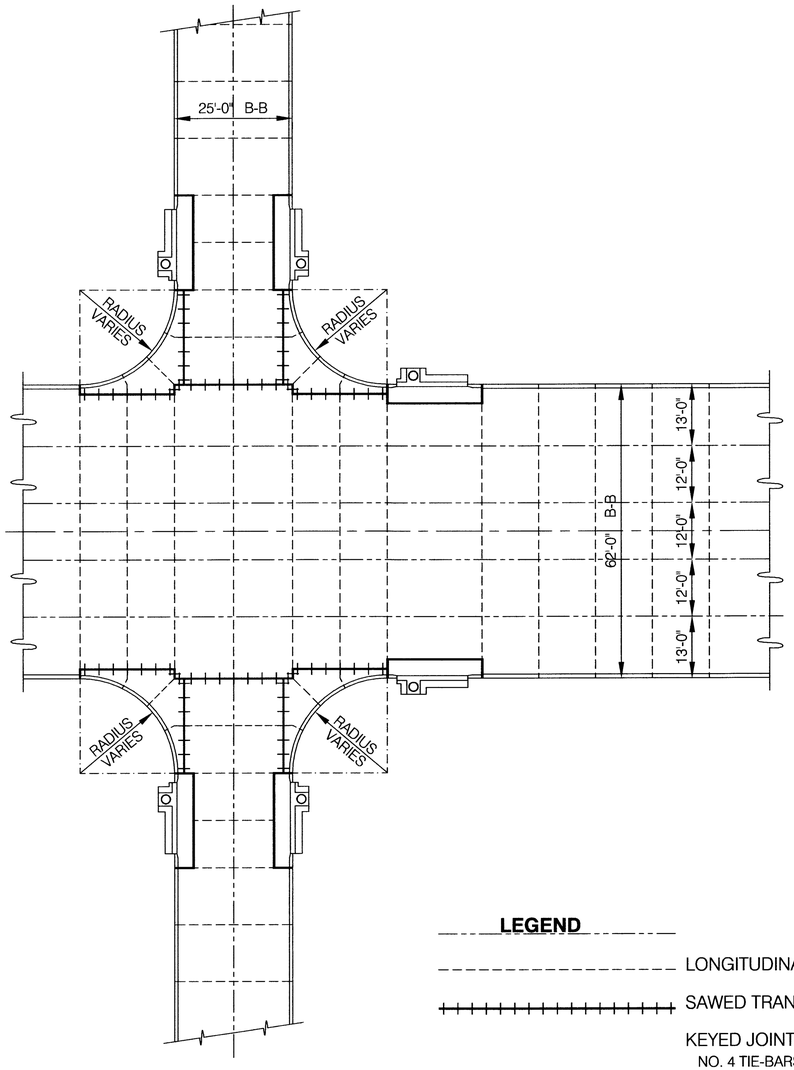

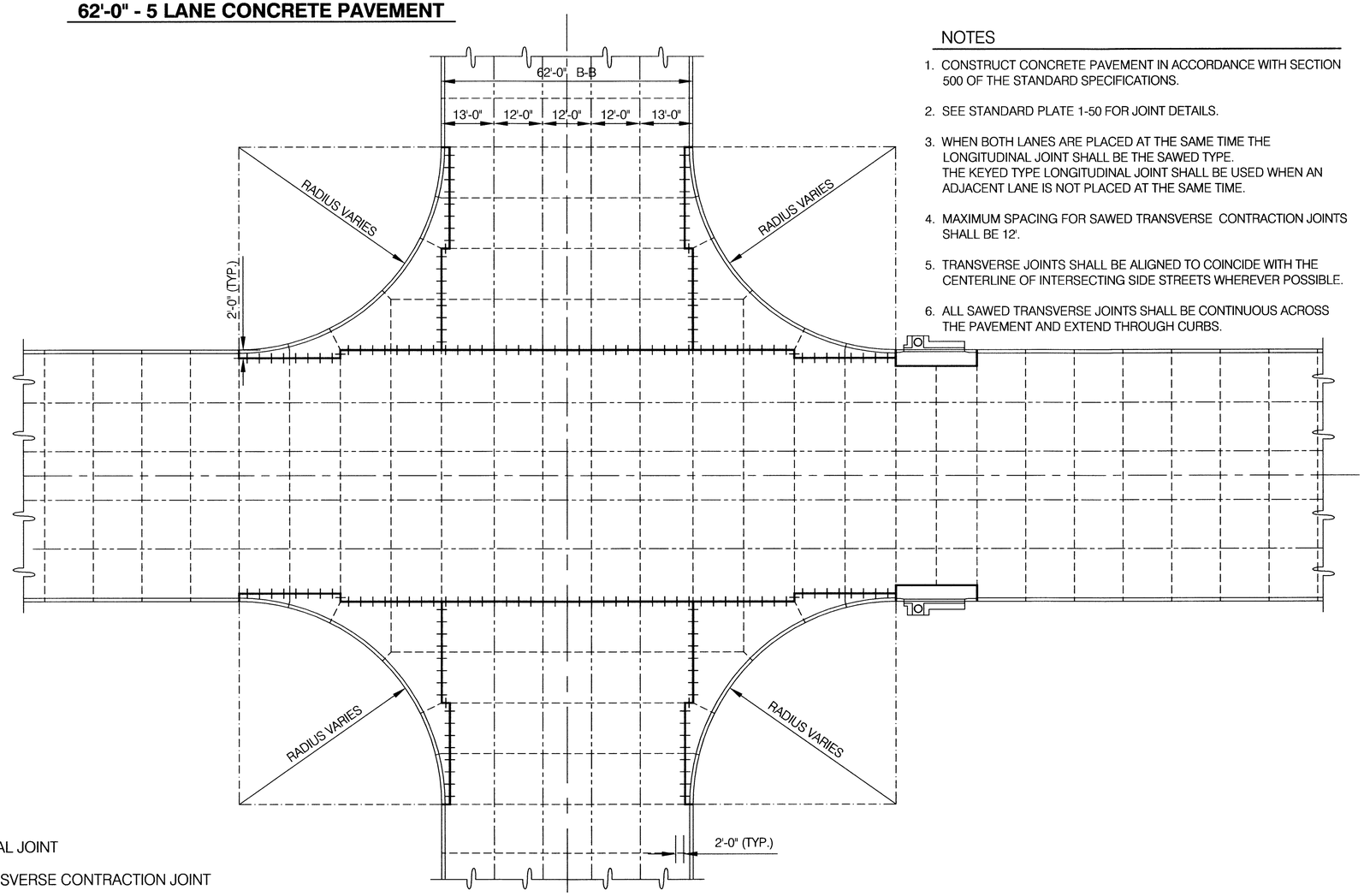

NOTES

1. CONSTRUCT CONCRETE PAVEMENT IN ACCORDANCE WITH SECTION 500 OF THE STANDARD SPECIFICATIONS.
2. SEE STANDARD PLATE 1-50 FOR JOINT DETAILS.
3. WHEN BOTH LANES ARE PLACED AT THE SAME TIME THE LONGITUDINAL JOINT SHALL BE THE SAWED TYPE. THE KEYED TYPE LONGITUDINAL JOINT SHALL BE USED WHEN AN ADJACENT LANE IS NOT PLACED AT THE SAME TIME.
4. MAXIMUM SPACING FOR SAWED TRANSVERSE CONTRACTION JOINTS SHALL BE 12'.
5. TRANSVERSE JOINTS SHALL BE ALIGNED TO COINCIDE WITH THE CENTERLINE OF INTERSECTING SIDE STREETS WHEREVER POSSIBLE.
6. ALL SAWED TRANSVERSE JOINTS SHALL BE CONTINUOUS ACROSS THE PAVEMENT AND EXTEND THROUGH CURBS.

LEGEND

LONGITUDINAL JOINT

SAWED TRANSVERSE CONTRACTION JOINT

KEYED JOINT - LUG-OUT TYPE
NO. 4 TIE-BARS AT 3'-0" CENTERS

1	REVISION 01/27/2009	DESIGN ENGINEER	CITY OF OMAHA PUBLIC WORKS DEPARTMENT
2	REVISION 9/23/2010	PUBLIC WORKS DIRECTOR	62'-0" .... 5 LANE CONCRETE PAVEMENT
			STANDARD PLATE 1-32 SHEET 1/1
			ISSUE DATE: ... JANUARY 27, 2009

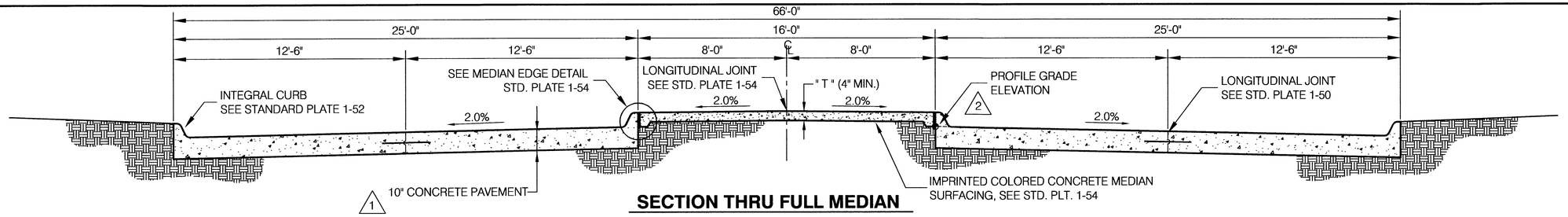

SECTION THRU FULL MEDIAN

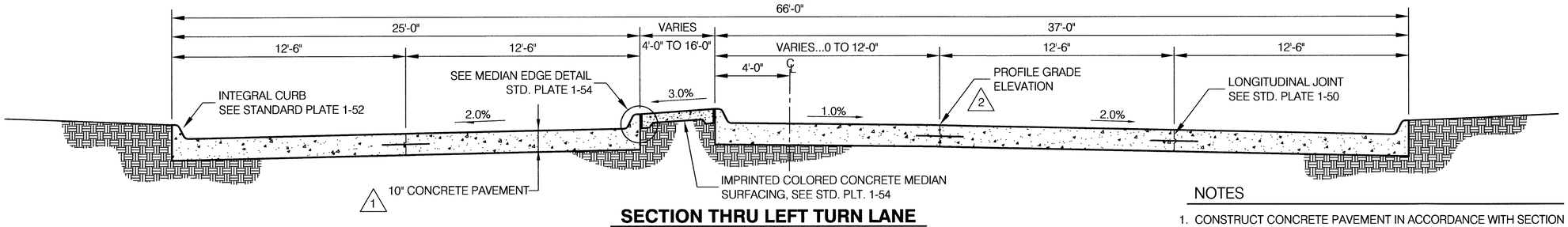

SECTION THRU LEFT TURN LANE

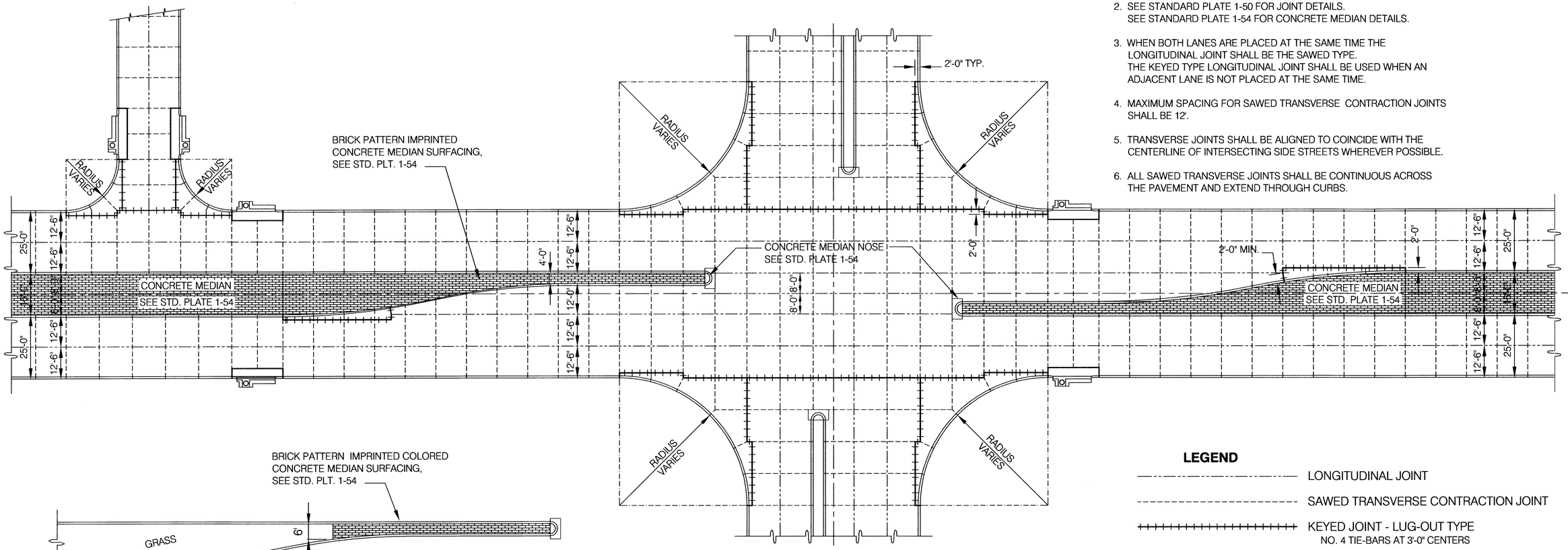

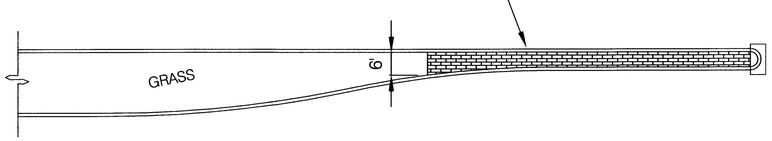

GRASS MEDIAN PLAN

NOTES

1. CONSTRUCT CONCRETE PAVEMENT IN ACCORDANCE WITH SECTION 500 OF THE STANDARD SPECIFICATIONS.
2. SEE STANDARD PLATE 1-50 FOR JOINT DETAILS.
   SEE STANDARD PLATE 1-54 FOR CONCRETE MEDIAN DETAILS.
3. WHEN BOTH LANES ARE PLACED AT THE SAME TIME THE LONGITUDINAL JOINT SHALL BE THE SAWED TYPE.
   THE KEYED TYPE LONGITUDINAL JOINT SHALL BE USED WHEN AN ADJACENT LANE IS NOT PLACED AT THE SAME TIME.
4. MAXIMUM SPACING FOR SAWED TRANSVERSE CONTRACTION JOINTS SHALL BE 12'.
5. TRANSVERSE JOINTS SHALL BE ALIGNED TO COINCIDE WITH THE CENTERLINE OF INTERSECTING SIDE STREETS WHEREVER POSSIBLE.
6. ALL SAWED TRANSVERSE JOINTS SHALL BE CONTINUOUS ACROSS THE PAVEMENT AND EXTEND THROUGH CURBS.

LEGEND

- LONGITUDINAL JOINT
- SAWED TRANSVERSE CONTRACTION JOINT
- KEYED JOINT - LUG-OUT TYPE
  NO. 4 TIE-BARS AT 3'-0" CENTERS

1	REVISION 01/27/2009	DESIGN ENGINEER
2	REVISION 9/23/2010	PUBLIC WORKS DIRECTOR

CITY OF OMAHA PUBLIC WORKS DEPARTMENT

66'-0".... 4 LANE DIVIDED CONCRETE PAVEMENT

STANDARD PLATE 1-40 SHEET 1/1

ISSUE DATE: ..... JANUARY 27, 2009

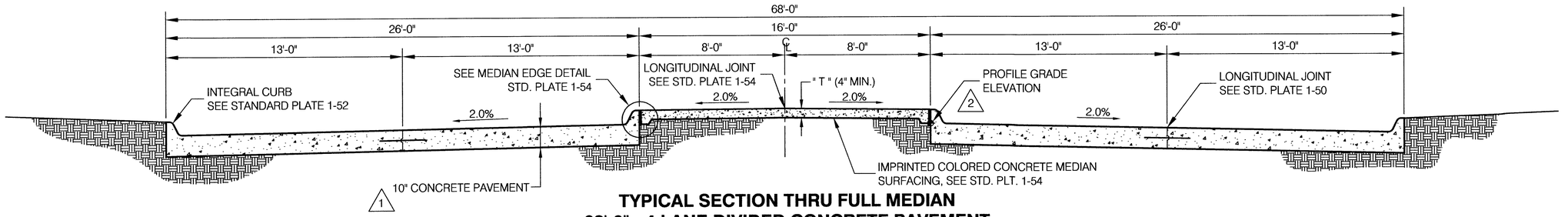

TYPICAL SECTION THRU FULL MEDIAN
68'-0" - 4 LANE DIVIDED CONCRETE PAVEMENT

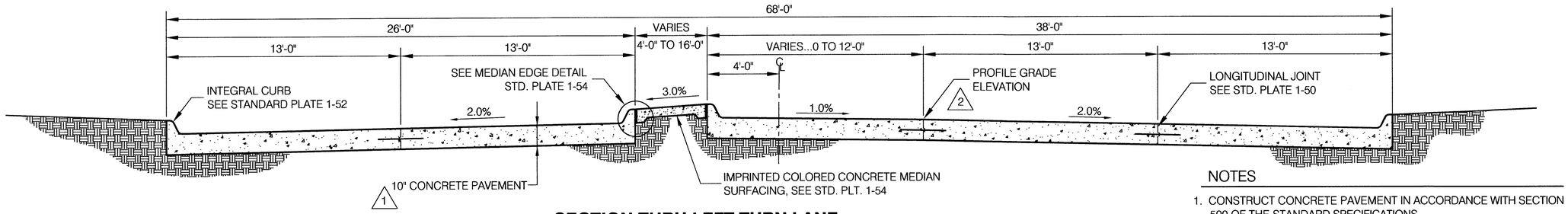

SECTION THRU LEFT TURN LANE

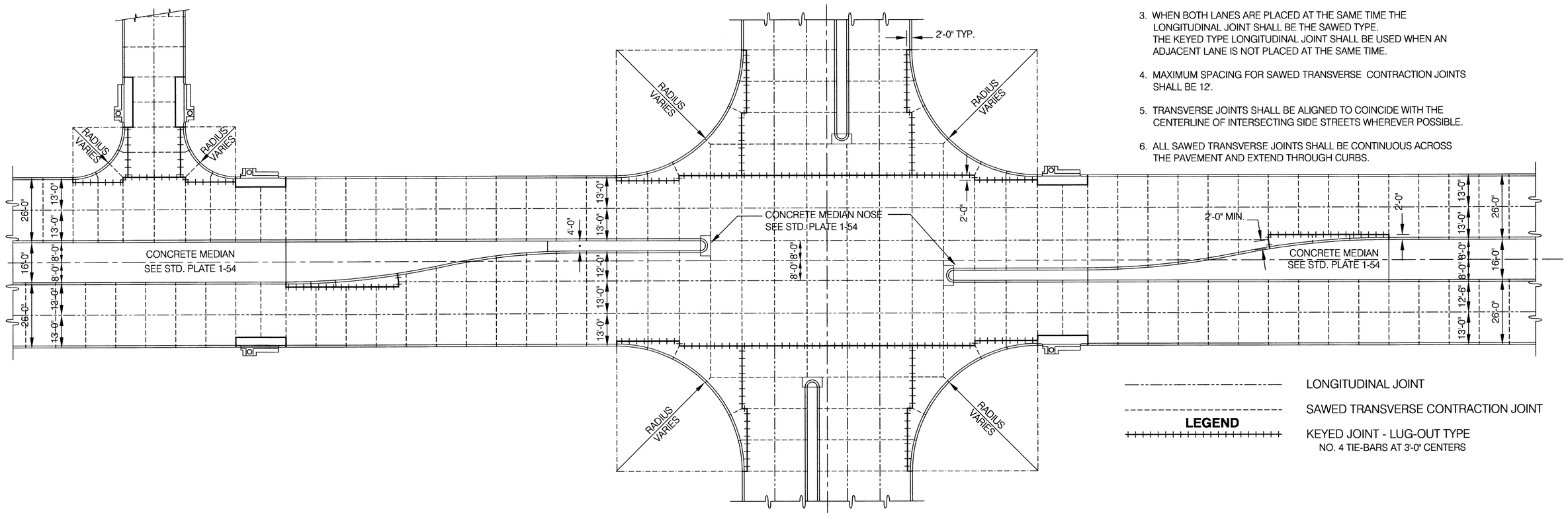

NOTES

1. CONSTRUCT CONCRETE PAVEMENT IN ACCORDANCE WITH SECTION 500 OF THE STANDARD SPECIFICATIONS.
2. SEE STANDARD PLATE 1-50 FOR JOINT DETAILS.
   SEE STANDARD PLATE 1-54 FOR CONCRETE MEDIAN DETAILS.
3. WHEN BOTH LANES ARE PLACED AT THE SAME TIME THE LONGITUDINAL JOINT SHALL BE THE SAWED TYPE.
   THE KEYED TYPE LONGITUDINAL JOINT SHALL BE USED WHEN AN ADJACENT LANE IS NOT PLACED AT THE SAME TIME.
4. MAXIMUM SPACING FOR SAWED TRANSVERSE CONTRACTION JOINTS SHALL BE 12'.
5. TRANSVERSE JOINTS SHALL BE ALIGNED TO COINCIDE WITH THE CENTERLINE OF INTERSECTING SIDE STREETS WHEREVER POSSIBLE.
6. ALL SAWED TRANSVERSE JOINTS SHALL BE CONTINUOUS ACROSS THE PAVEMENT AND EXTEND THROUGH CURBS.

LEGEND

- LONGITUDINAL JOINT
- SAWED TRANSVERSE CONTRACTION JOINT
- KEYED JOINT - LUG-OUT TYPE
  NO. 4 TIE-BARS AT 3'-0" CENTERS

1	REVISION 01/27/2009
2	REVISION 9/23/2010

DESIGN ENGINEER

PUBLIC WORKS DIRECTOR

CITY OF OMAHA PUBLIC WORKS DEPARTMENT

68'-0".... 4 LANE DIVIDED CONCRETE PAVEMENT

STANDARD PLATE 1-42

SHEET 1/1

ISSUE DATE: ..... JANUARY 27, 2009

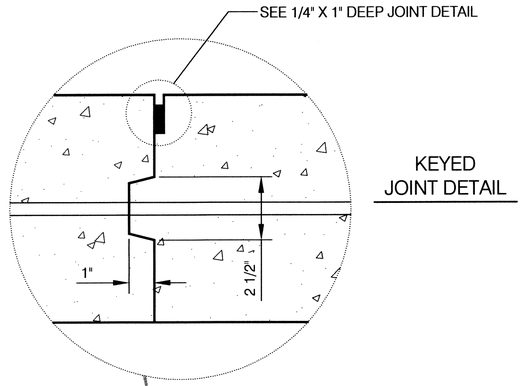

KEYED
JOINT DETAIL

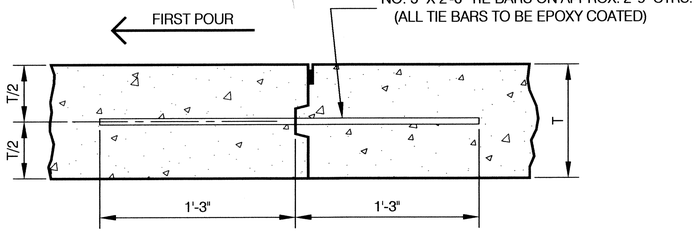

KEYED JOINT
LONGITUDINAL AND LUG-OUT TYPES

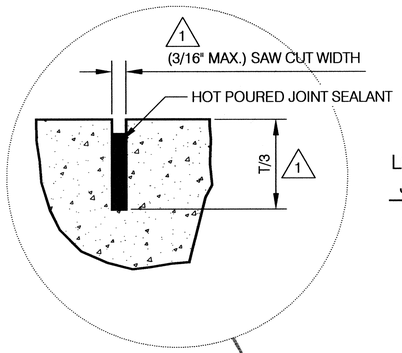

LONGITUDINAL
JOINT DETAIL

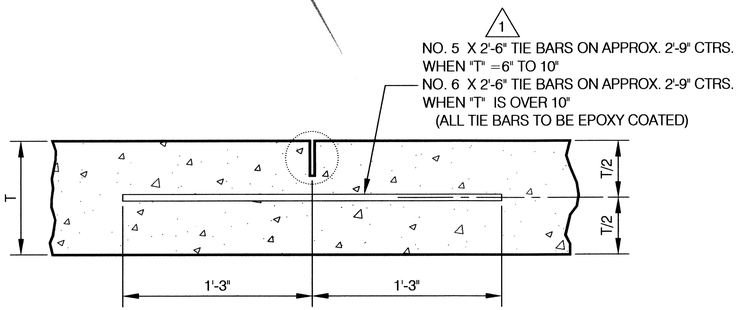

SAWED LONGITUDINAL JOINT

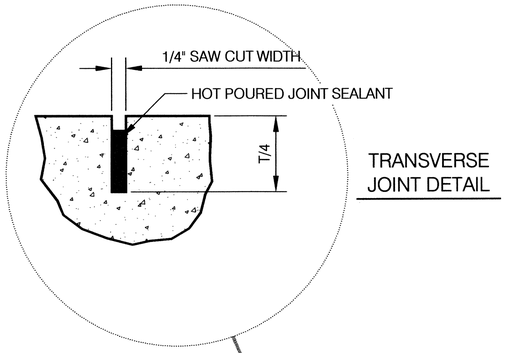

TRANSVERSE
JOINT DETAIL

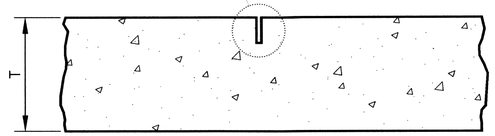

SAWED TRANSVERSE CONTRACTION JOINT

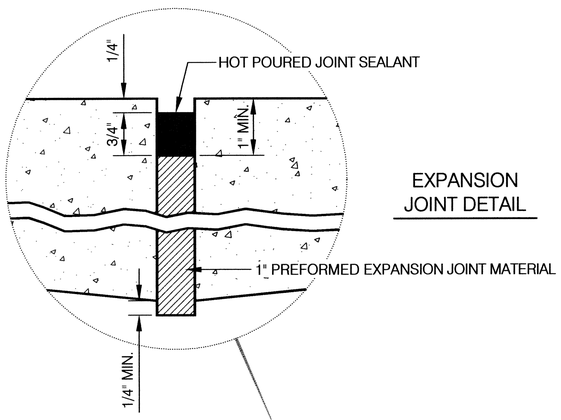

EXPANSION
JOINT DETAIL

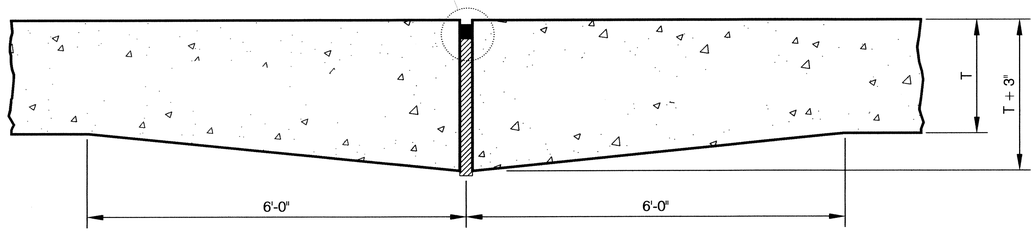

EXPANSION JOINT

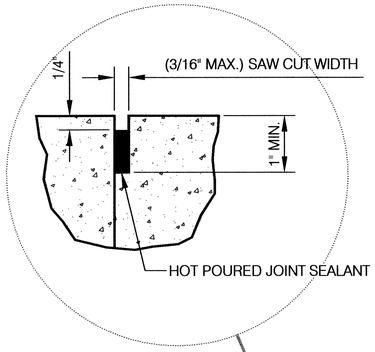

1/4" X 1" DEEP
JOINT DETAIL

NOTES

1. CONSTRUCT CONCRETE PAVEMENT IN ACCORDANCE WITH SECTION 500 OF THE STANDARD SPECIFICATIONS.
2. WHEN TWO ADJACENT LANES ARE PLACED AT THE SAME TIME THE LONGITUDINAL JOINT COMMON TO BOTH SHALL BE THE SAWED TYPE. THE KEYED TYPE LONGITUDINAL JOINT SHALL BE USED WHEN AN ADJACENT LANE IS NOT PLACED AT THE SAME TIME.
3. ALL EXPANSION JOINT MATERIAL AND SAWED TRANSVERSE JOINTS SHALL BE CONTINUOUS ACROSS THE PAVEMENT AND EXTEND THROUGH CURBS.

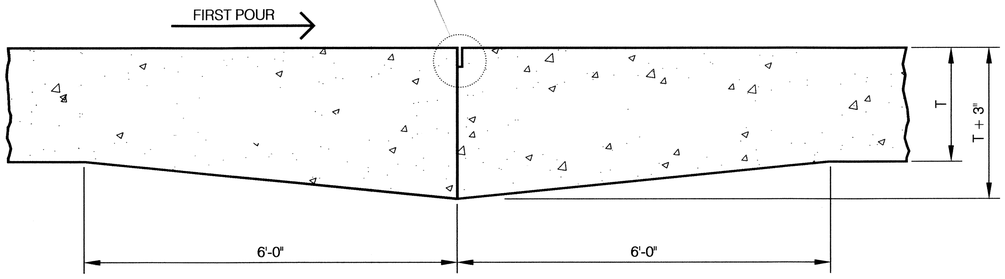

TRANSVERSE CONSTRUCTION JOINT

1 REVISED: 2-6-2009

Kirk R Pfaff
DESIGN ENGINEER

Charles Krejcarek
CITY ENGINEER

CITY OF OMAHA PUBLIC WORKS DEPARTMENT

CONCRETE PAVEMENT JOINT DETAILS

STANDARD PLATE 1-50

SHEET 1/1

ISSUE DATE: ..... MARCH 26, 2003

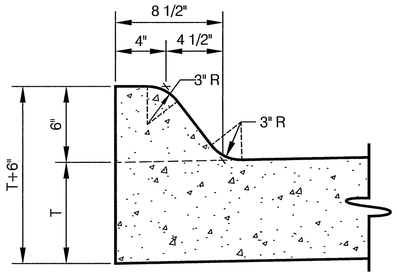

TYPE "A" INTEGRAL CURB

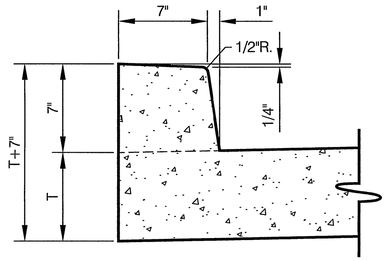

TYPE "B" INTEGRAL CURB

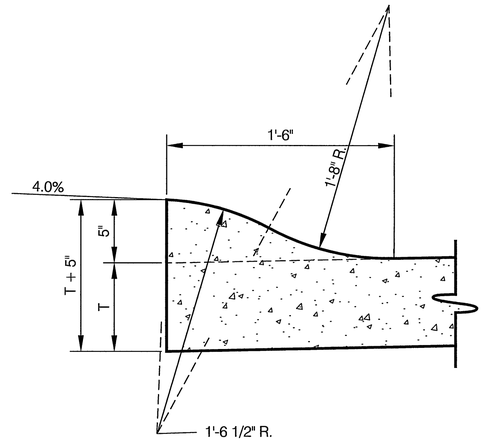

TYPE "C" INTEGRAL CURB

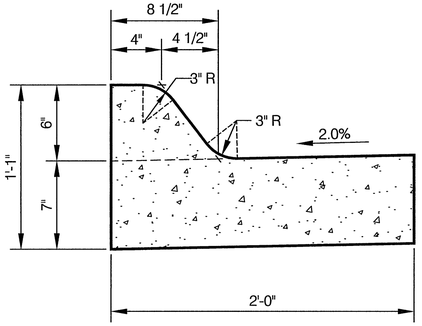

COMBINATION CURB AND GUTTER

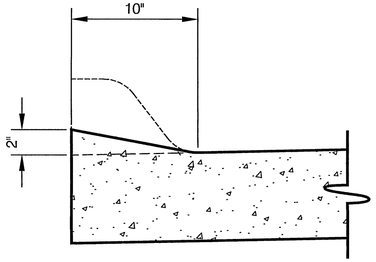

DRIVEWAY LIP CURB

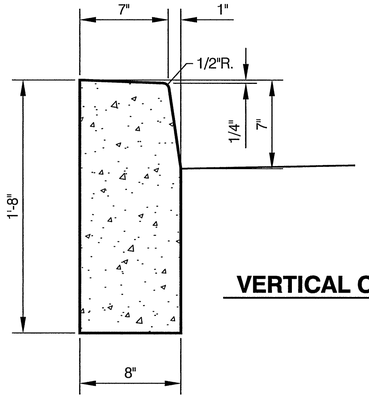

VERTICAL CURB

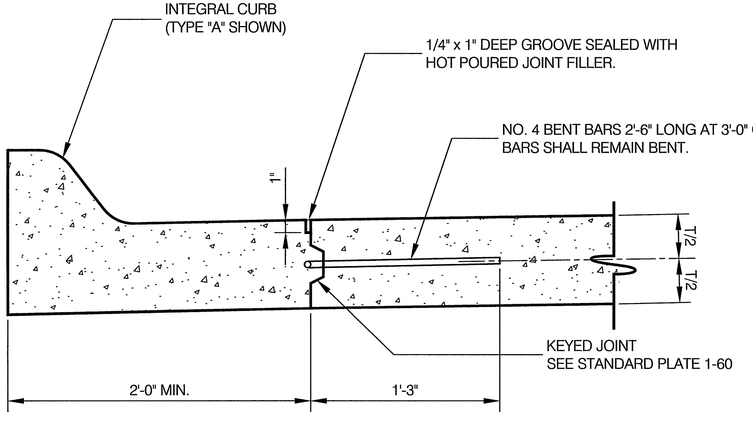

TEMPORARY CURB AND GUTTER

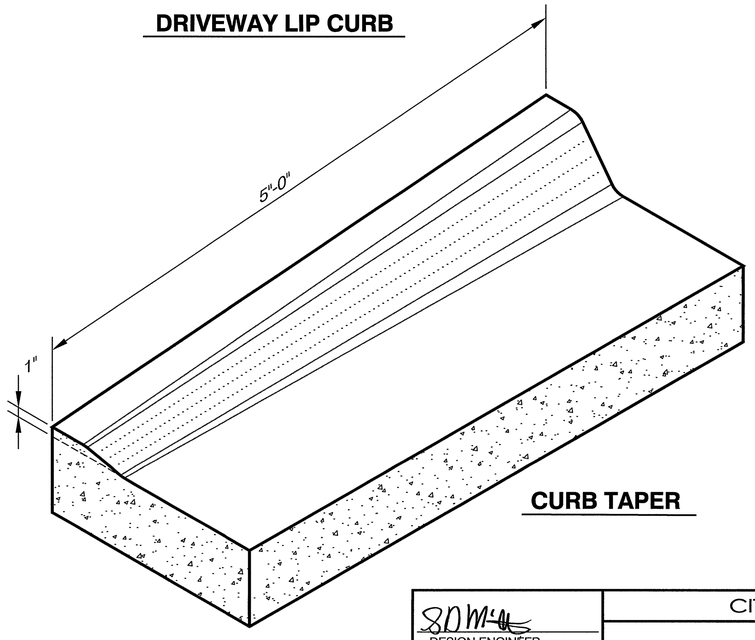

CURB TAPER

NOTES

1. INTEGRAL CURB AND COMBINATION CURB AND GUTTER CONSTRUCTION SHALL CONFORM TO SECTION 502 OF THE STANDARD SPECIFICATIONS.

DESIGN ENGINEER

CITY ENGINEER

CITY OF OMAHA PUBLIC WORKS DEPARTMENT

CONCRETE CURB DETAILS

STANDARD PLATE **1-52**

SHEET 1/1

ISSUE DATE: ..... MARCH 26, 2003

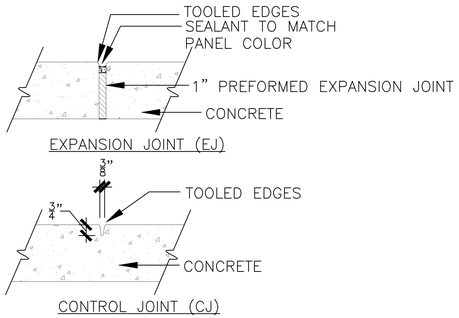

JOINTS (TYP)

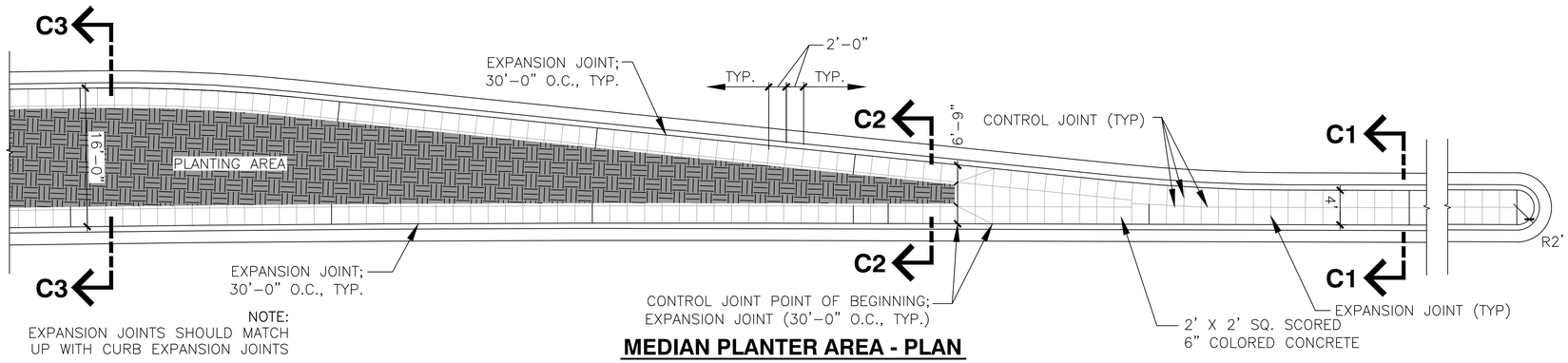

NOTE:
EXPANSION JOINTS SHOULD MATCH UP WITH CURB EXPANSION JOINTS

MEDIAN PLANTER AREA - PLAN

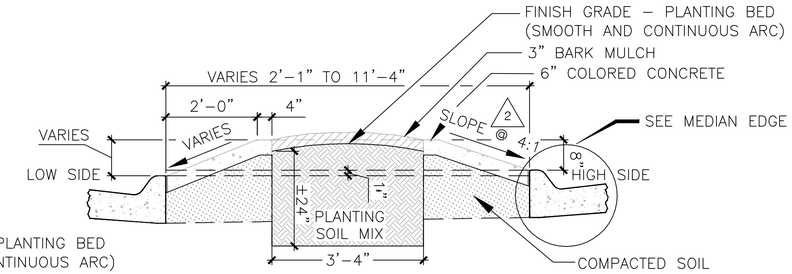

SECTION C2-C2 (MEDIAN TRANSITION)

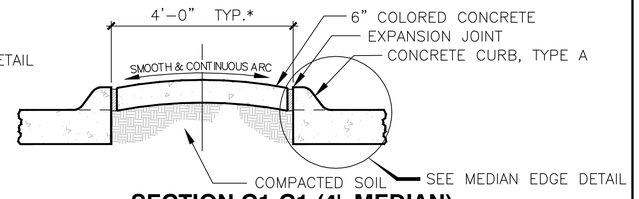

SECTION C1-C1 (4' MEDIAN)

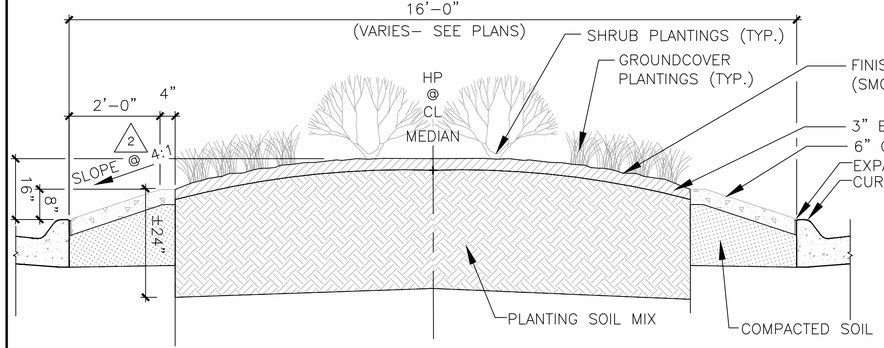

SECTION C3-C3 16' (MEDIAN TRANSITION)

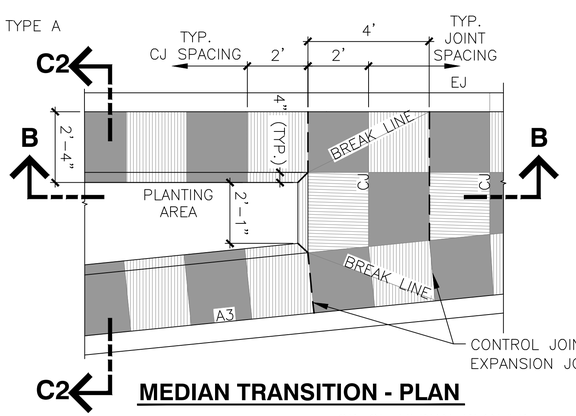

MEDIAN TRANSITION - PLAN

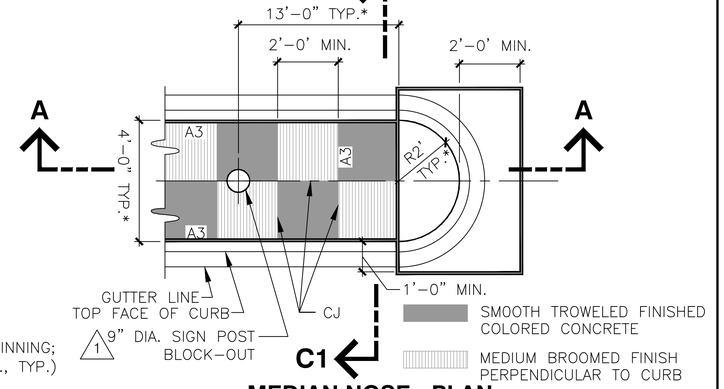

MEDIAN NOSE - PLAN

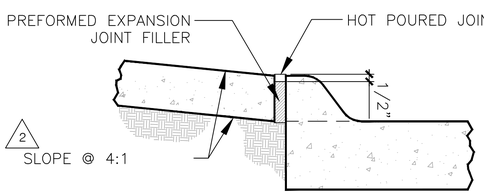

MEDIAN EDGE DETAIL

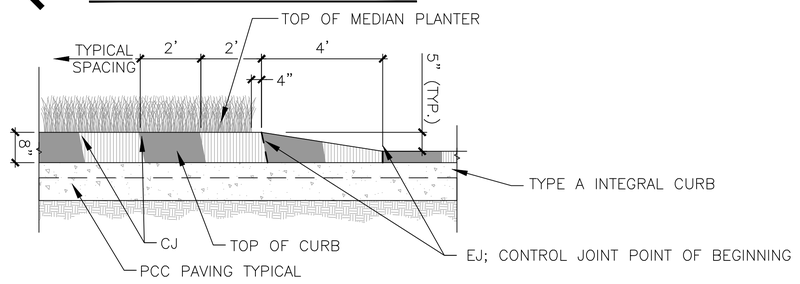

SECTION B-B (MEDIAN TRANSITION - ELEVATION)

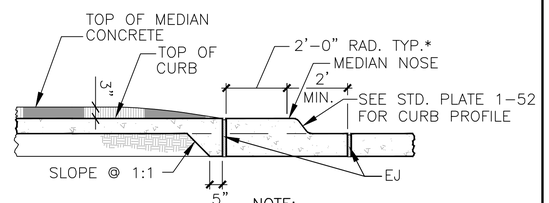

NOTE:
EXPANSION JOINTS SHOULD MATCH UP WITH CURB EXPANSION JOINTS

SECTION A-A (MEDIAN NOSE - ELEVATION)

NOTES

1. CONCRETE MEDIAN SURFACING AND MEDIAN NOSE SHALL BE CONSTRUCTED IN CONFORMANCE WITH SECTION 503 OF THE STANDARD SPECIFICATIONS AND SPECIAL PROVISIONS.
2. CONCRETE MEDIAN SURFACING SHALL BE COLORED AND TEXTURED WITH A PATTERN AS NOTED IN THIS PLAN. CONCRETE COLORING SHALL CONFORM TO THE SPECIAL PROVISIONS.
3. THICKNESS " T " OF CONCRETE MEDIAN SURFACING SHALL BE 6" UNLESS OTHERWISE SPECIFIED IN THE PLANS.
4. ALL CONTROL JOINTS SHALL BE CONSTRUCTED IN ALL MEDIANS AS SHOWN ON THIS PLAN. JOINT DEPTH SHALL BE 3/4".
5. 1" PREFORMED EXPANSION JOINT MATERIAL SHALL BE PLACED TRANSVERSELY THROUGH MEDIAN AT 30' MAXIMUM INTERVALS. PREFORMED JOINT MATERIAL SHALL CONFORM TO SECTION 503 (G) OF THE STANDARD SPECIFICATIONS.
6. ALL PREFORMED EXPANSION JOINTS SHALL BE SEALED WITH HOT POURED JOINT SEALANT CONFORMING TO SECTION 503 (H) OF THE STANDARD SPECIFICATIONS.
7. TRANSVERSE AND LONGITUDINAL CONTROL JOINTS SHALL NOT BE FILLED.

1	REVISION 02/01/2008		CITY OF OMAHA PUBLIC WORKS DEPARTMENT
2	REVISION 2/6/2009	DESIGN ENGINEER	**CONCRETE MEDIAN DETAILS**
		CITY ENGINEER	STANDARD PLATE **1-54** SHEET 1/2
			ISSUE DATE: ..... MARCH 26, 2003

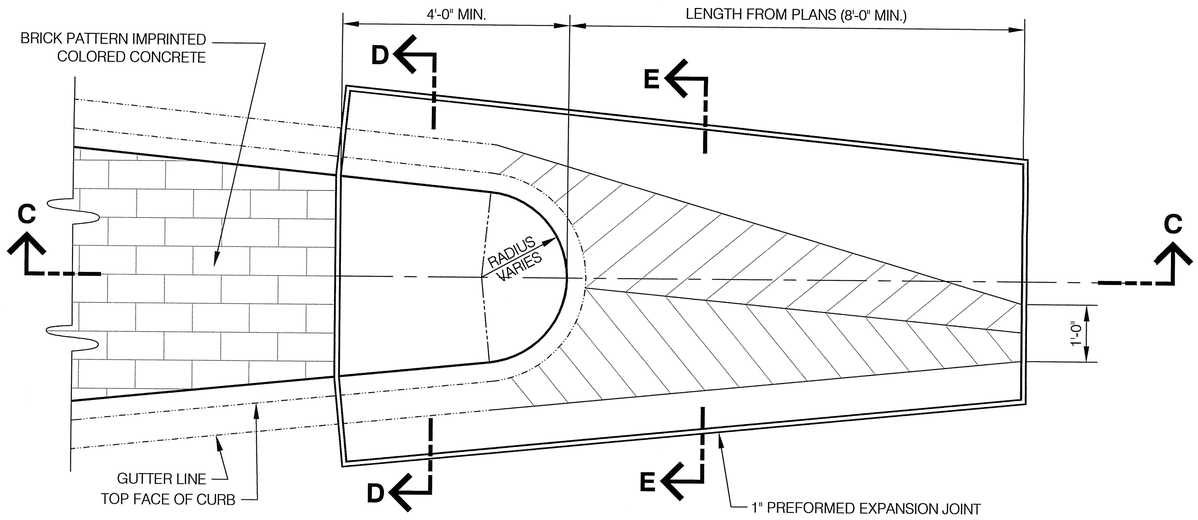

CONCRETE MEDIAN SAFETY NOSE PLAN

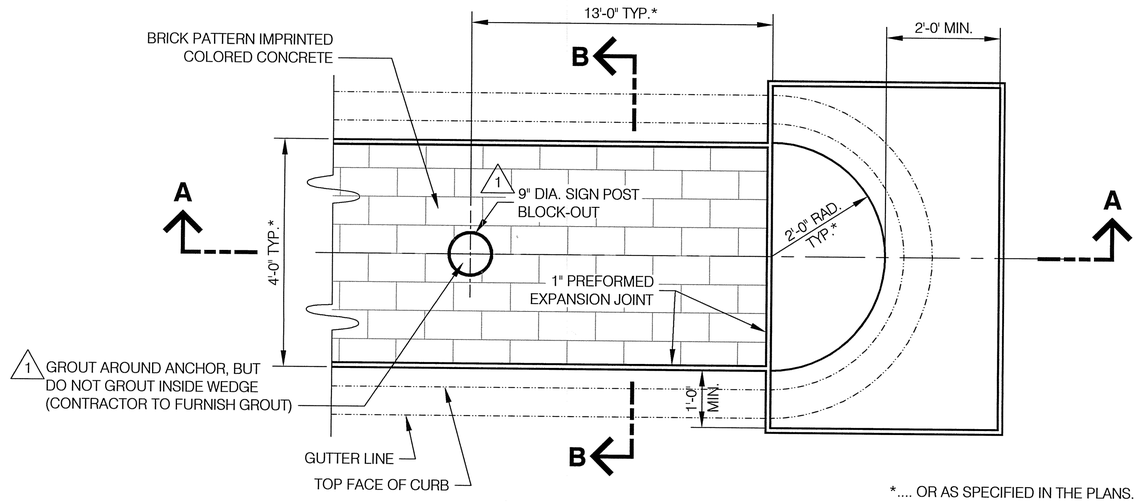

*.... OR AS SPECIFIED IN THE PLANS.

CONCRETE MEDIAN NOSE PLAN

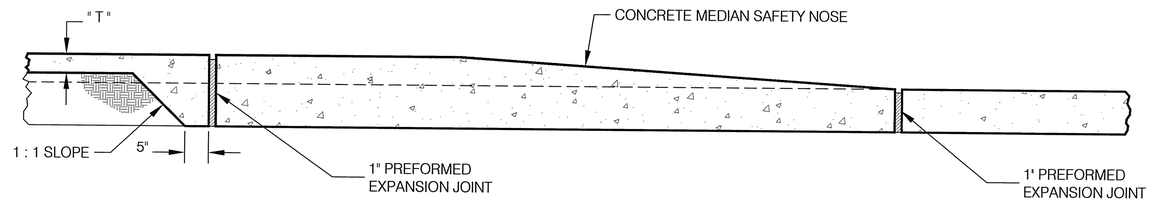

SECTION C - C

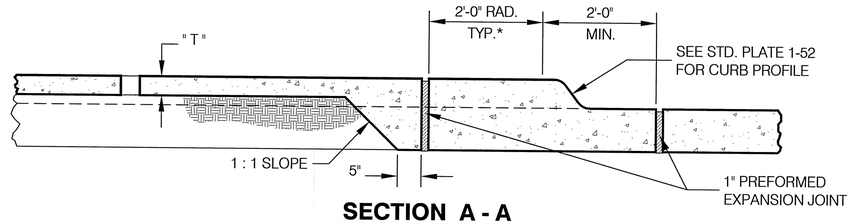

SECTION A - A

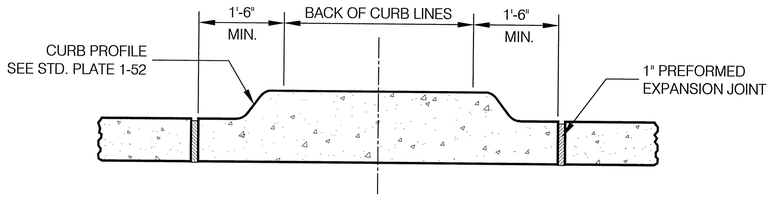

SECTION D- D

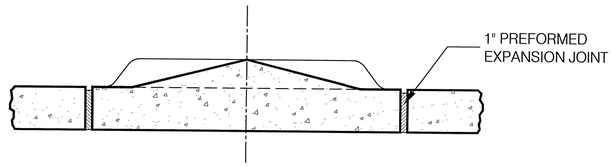

SECTION E- E

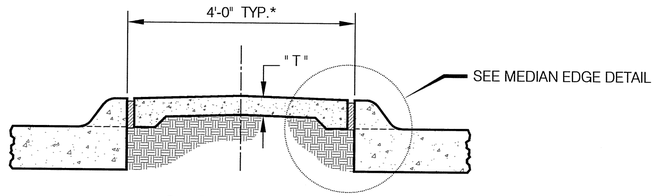

SECTION B- B

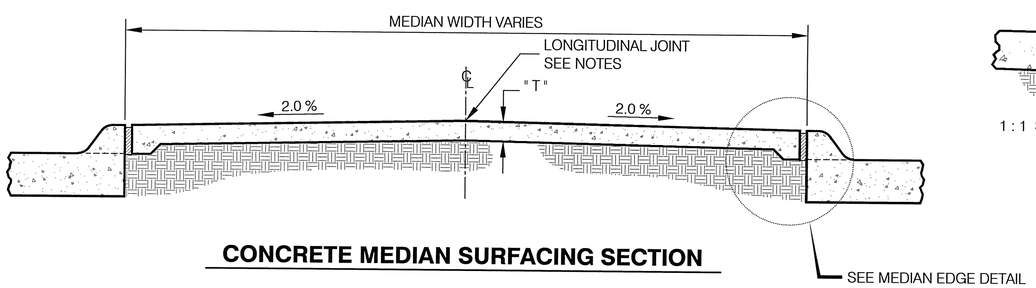

CONCRETE MEDIAN SURFACING SECTION

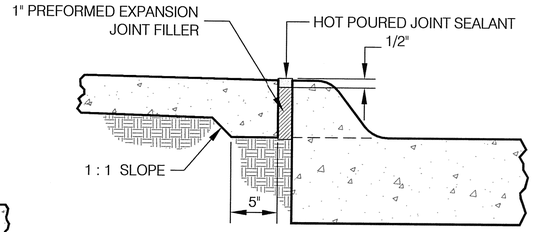

MEDIAN EDGE DETAIL

NOTES

1. CONCRETE MEDIAN SURFACING AND MEDIAN NOSE SHALL BE CONSTRUCTED IN CONFORMANCE WITH SECTION 503 OF THE STANDARD SPECIFICATIONS.
2. CONCRETE MEDIAN SURFACING SHALL BE COLORED AND IMPRINTED WITH A BRICK PATTERN. CONCRETE COLORING OR STAIN SHALL CONFORM TO SECTION 503 (E) OR (F).
3. THICKNESS " T " OF CONCRETE MEDIAN SURFACING SHALL BE 4" UNLESS OTHERWISE SPECIFIED IN THE PLANS.
4. A LONGITUDINAL CONTRACTION JOINT SHALL BE CONSTRUCTED IN ALL MEDIANS GREATER THAN 8'-0" IN WIDTH. JOINT DEPTH SHALL BE 1/4 "T". TRANSVERSE CONTRACTION JOINTS SHALL BE CONSTRUCTED IN ALL MEDIANS AT 8'-0" MAXIMUM INTERVALS. JOINT DEPTH SHALL BE 1/4 "T".
5. 1" PREFORMED EXPANSION JOINT MATERIAL SHALL BE PLACED TRANSVERSELY THROUGH MEDIAN AT 50' MAXIMUM INTERVALS. PREFORMED JOINT MATERIAL SHALL CONFORM TO SECTION 503 (G) OF THE STANDARD SPECIFICATIONS.
6. ALL PREFORMED EXPANSION JOINTS SHALL BE SEALED WITH HOT POURED JOINT SEALANT CONFORMING TO SECTION 503 (H) OF THE STANDARD SPECIFICATIONS.
7. TRANSVERSE AND LONGITUDINAL CONTRACTION JOINTS SHALL NOT BE FILLED.

1	REVISION 12/20/2007	DESIGN ENGINEER CITY ENGINEER	CITY OF OMAHA PUBLIC WORKS DEPARTMENT CONCRETE MEDIAN DETAILS	STANDARD PLATE 1-54 SHEET 2/2 ISSUE DATE: ..... MARCH 26, 2003

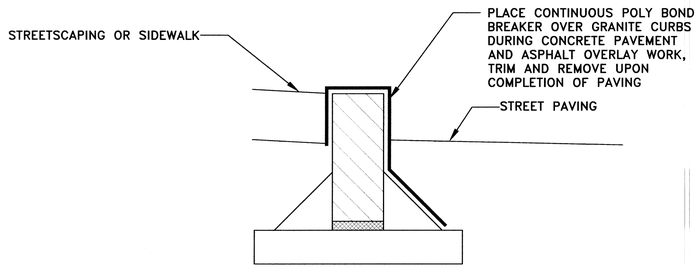

CURB PROTECTION DETAIL
NO SCALE

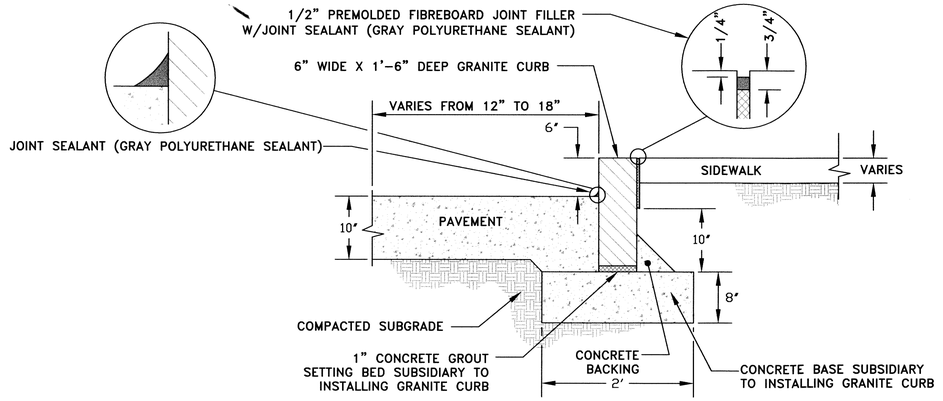

GRANITE CURB DETAIL (6" WIDE CURB)
NO SCALE

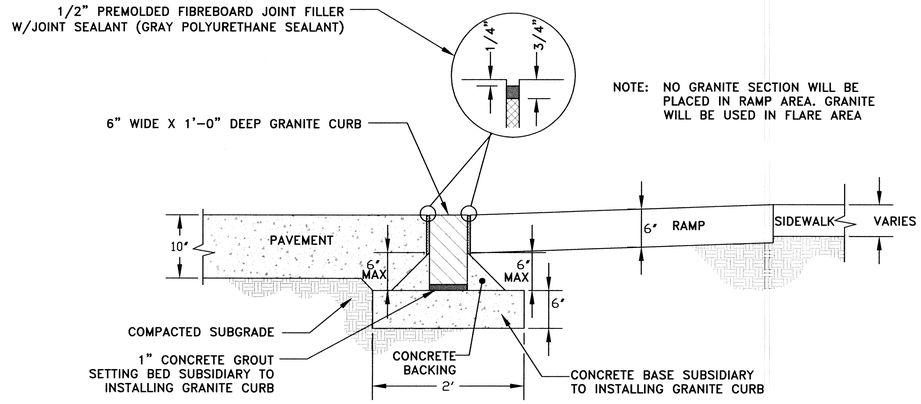

WHEELCHAIR RAMP WITH GRANITE 6" WIDE CURB
NO SCALE

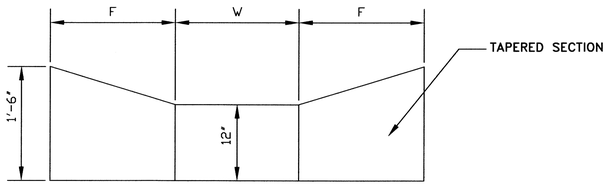

	W	F
CBD	8'-6"	5'-0"
TYP. W/CURBWALK	5'-0"	5'-0"
TYP. WITH GRASS OR STAMP	5'-0"	1'-0"

10' OR 20' RADIUS CURB (CBD)

TYPICAL ADA CURB RAMP
NO SCALE

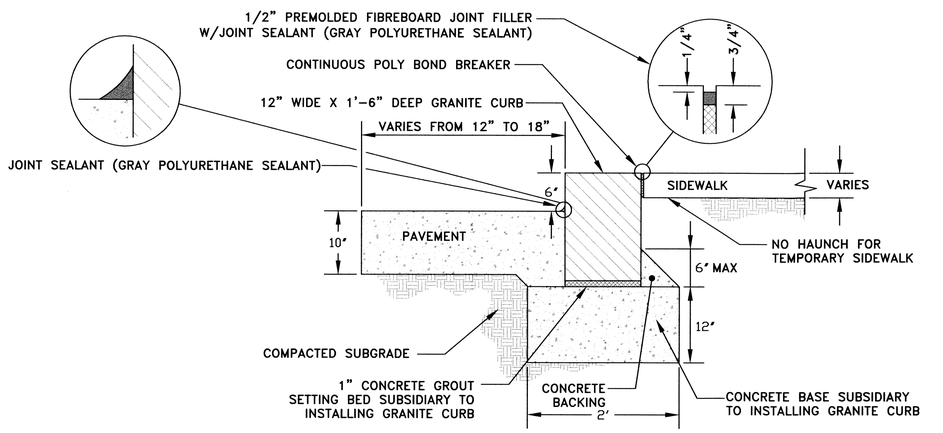

GRANITE CURB DETAIL (12" WIDE CURB)
NO SCALE

DESIGN ENGINEER

CITY ENGINEER

CITY OF OMAHA PUBLIC WORKS DEPARTMENT

GRANITE CURB DETAILS

STANDARD PLATE **1-56**

SHEET 1/1

ISSUE DATE: ..... AUG 23, 2010

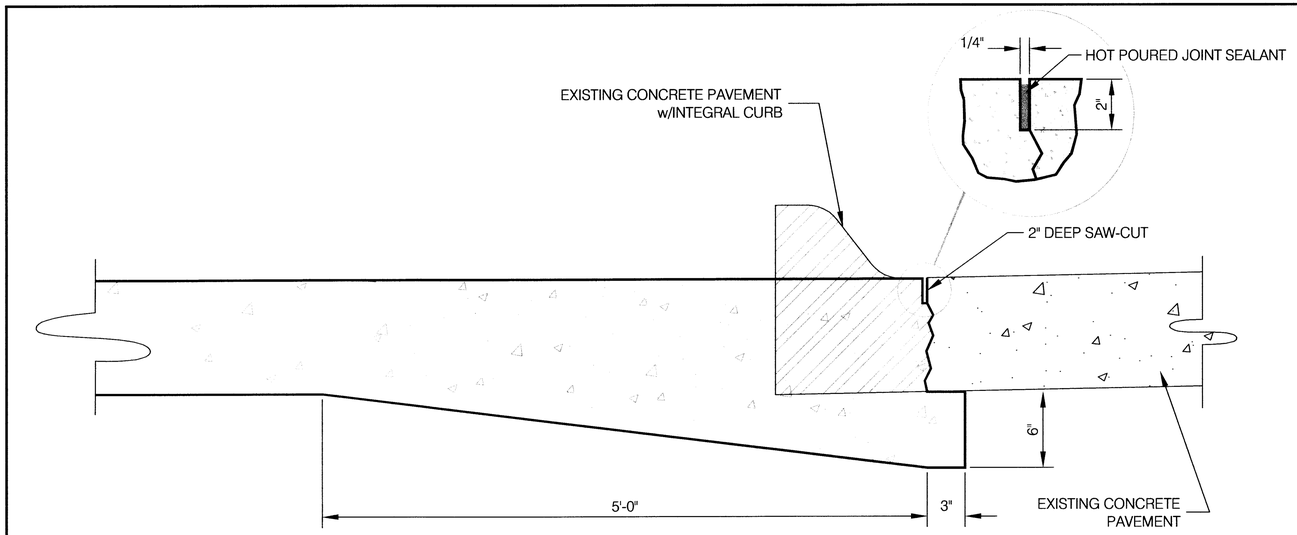

CONCRETE PAVEMENT WIDENING THICKENED EDGE JOINT

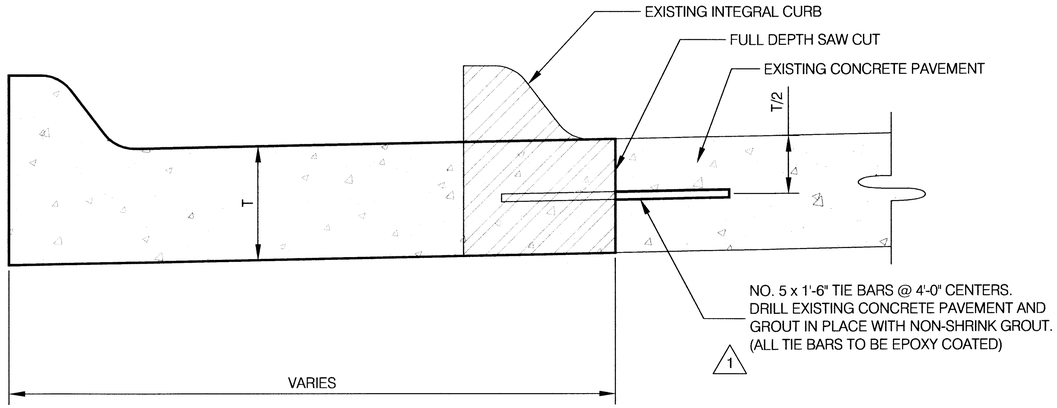

CONCRETE PAVEMENT WIDENING DOWELED JOINT

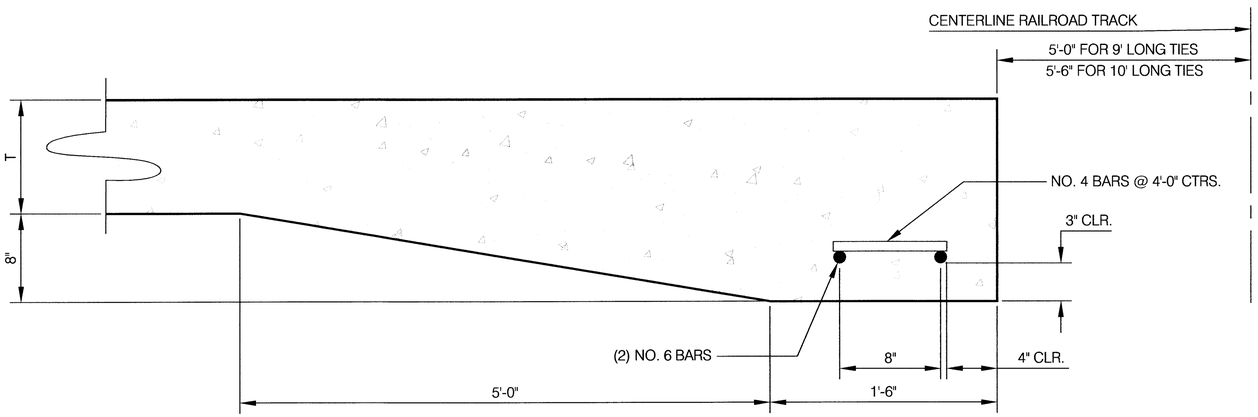

PAVEMENT BEAM AT RAILROAD CROSSING

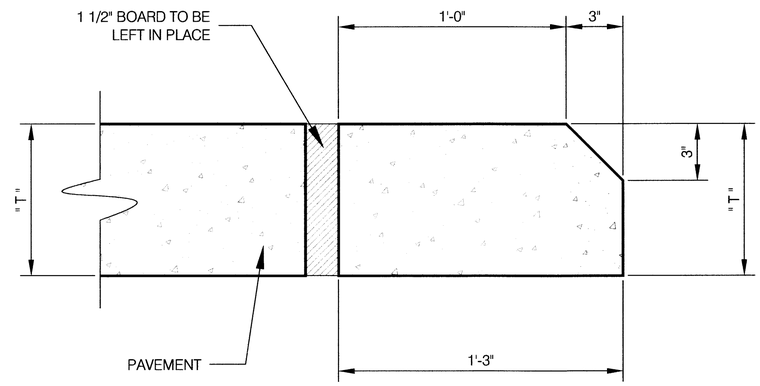

CONCRETE HEADER

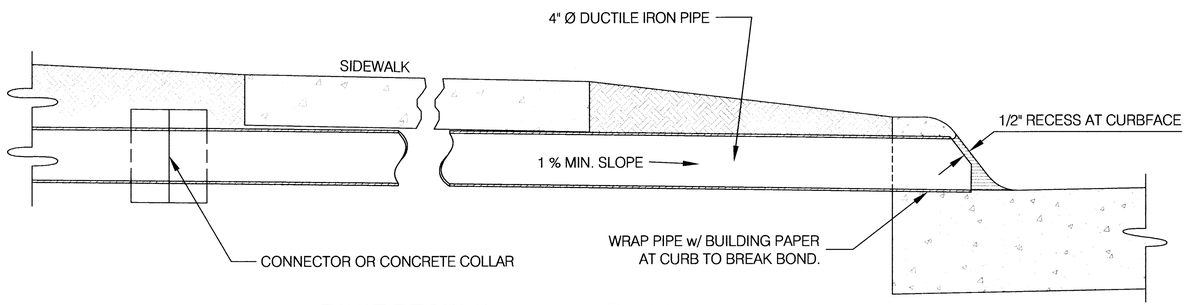

ROOF DRAIN OUTLET AT CURB

NOTES

1. CONSTRUCTION OF CONCRETE PAVEMENT AND APPURTENANCES SHALL BE IN ACCORDANCE WITH SECTION 500 OF THE STANDARD SPECIFICATIONS.
2. CONTRACTION JOINTS SHALL BE CONSTRUCTED TO MATCH LOCATIONS OF EXISTING JOINTS.

1	REVISION 9/23/2010	

Faith R Pfeff
DESIGN ENGINEER
Robert J Stubbe
PUBLIC WORKS DIRECTOR

CITY OF OMAHA PUBLIC WORKS DEPARTMENT

CONCRETE PAVEMENT WIDENING AND MISCELLANEOUS DETAILS

STANDARD PLATE 1-60

SHEET 1/1

ISSUE DATE: ..... MARCH 26, 2003

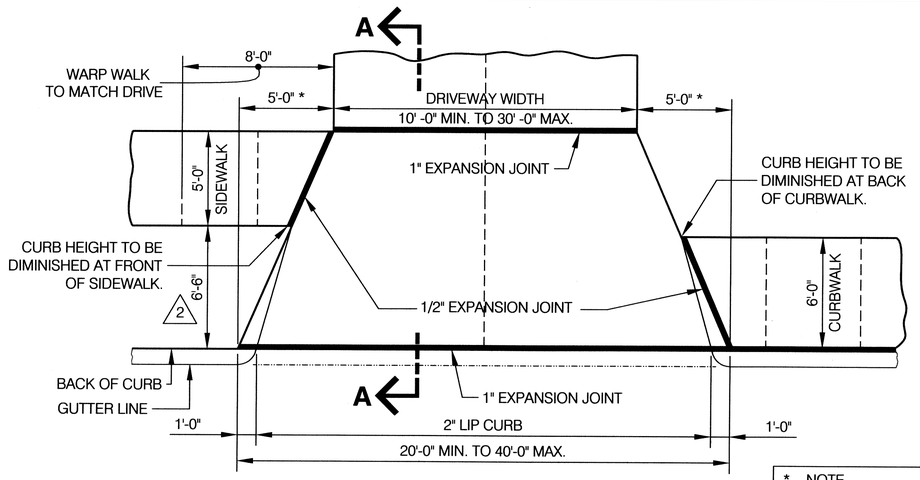

1 **FLARED APPROACH ..... NEW PAVEMENT**

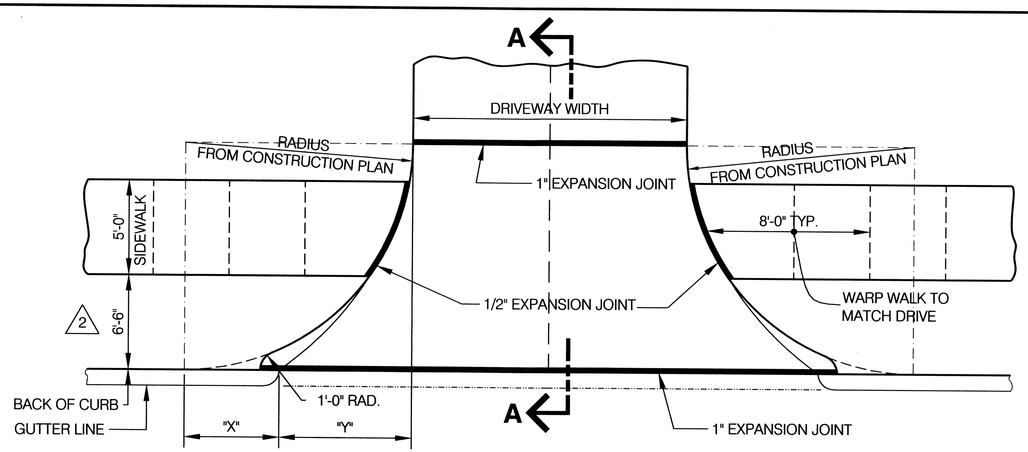

1 **RADIUS APPROACH ..... NEW PAVEMENT**

RADIUS	"X"	"Y"
10.0'	4.36'	5.64'
12.5'	4.90'	7.60'
15.0'	5.39'	9.61'
17.5'	5.83'	11.67'
20.0'	6.24'	13.76'
22.5'	6.63'	15.87'
25.0'	7.00'	18.00'
27.5'	7.35'	20.15'
30.0'	7.68'	22.32'
32.5'	8.00'	24.50'
35.0'	8.31'	26.69'
37.5'	8.60'	28.90'
40.0'	8.89'	31.11'

$X = \sqrt{(2R-1)}$

ALL DIMENSIONS IN FEET

*....NOTE
FOR DRIVEWAY WIDTHS 20'-0" OR WIDER FLARE MAY BE REDUCED TO 3'-0" MINIMUM.

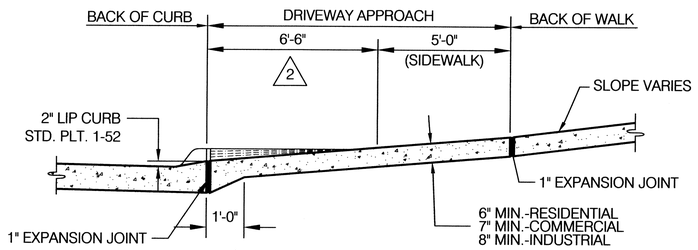

1 **SECTION A-A**

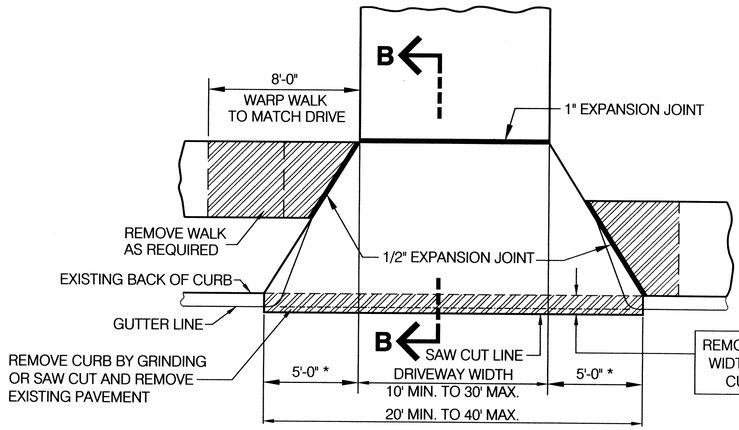

FLARED APPROACH
EXISTING PAVEMENT - CURB CUT DETAILS

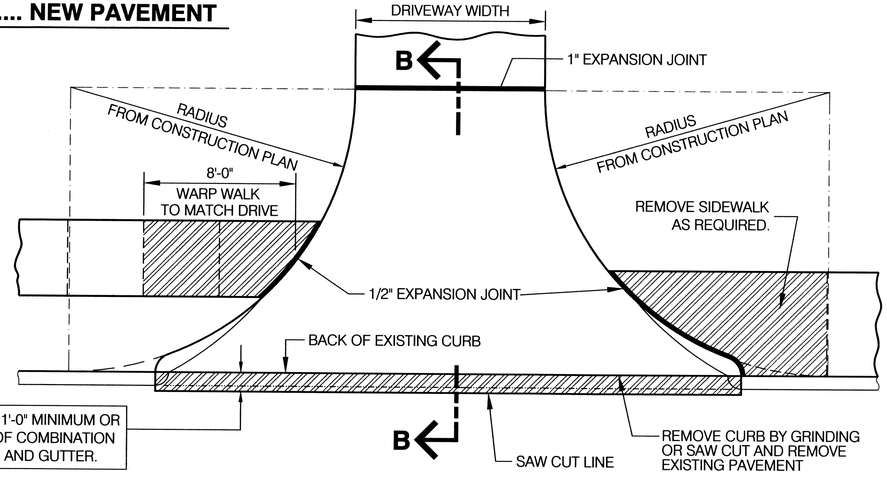

RADIUS APPROACH
EXISTING PAVEMENT - CURB CUT DETAILS

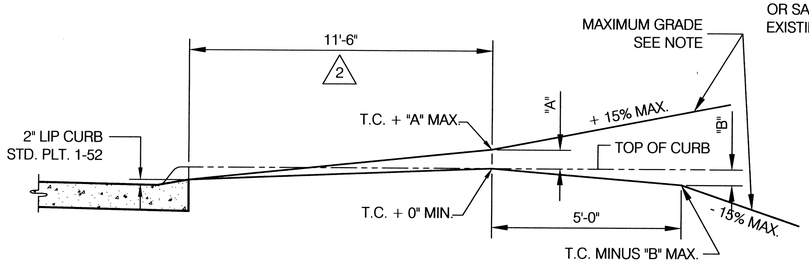

1 **DRIVEWAY GRADES FOR 5' SIDEWALK W/ 6.5' SETBACK**
2

DRIVEWAY GRADES 5' SIDEWALK W/ 6.5' SETBACK		
CURB HEIGHT	MAX. RISE ABOVE T.C. "A"	MAX. DROP BELOW T.C. "B"
5"	6 1/2"	6 1/8"
6"	5 1/2"	5 1/2"
7"	4 1/2"	4 1/2"
8"	3 1/2"	4 1/4"

1 2

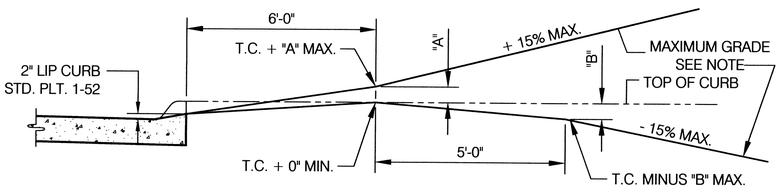

1 **DRIVEWAY GRADES FOR 6' CURBWALK**
2

DRIVEWAY GRADES 6' CURB WALK		
CURB HEIGHT	MAX. RISE ABOVE T.C. "A"	MAX. DROP BELOW T.C. "B"
5"	3"	5"
6"	2"	4"
7"	1"	3"
8"	0"	2"

1

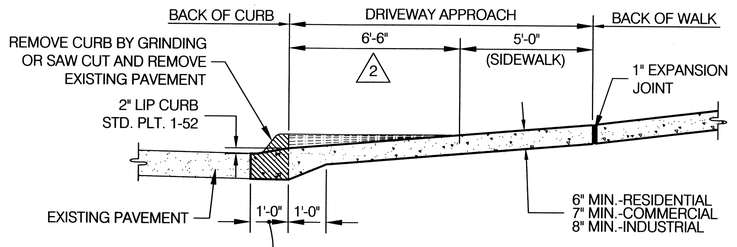

1 **SECTION B-B**

NOTES

1. CONSTRUCTION, WORKMANSHIP, AND MATERIALS SHALL CONFORM TO SECTION 500 OF THE "CITY OF OMAHA, STANDARD SPECIFICATIONS FOR PUBLIC WORKS CONSTRUCTION".
2. DEPTH OF SAW CUT IN EXISTING PAVEMENTS AND CURB SHALL BE 1/4 SLAB THICKNESS OR 2" MINIMUM.
3. THE MAXIMUM GRADE FOR DRIVEWAYS SHALL BE : 15% FOR RESIDENTIAL AND 10% FOR COMMERCIAL. FLATTER GRADES ARE RECOMMENDED.
4. CREST OR SAG IN VERTICAL CURVES SHALL NOT EXCEED A 4" HUMP IN A 10' CHORD.
5. PREFORMED EXPANSION JOINTS SHALL BE SEALED WITH HOT-POURED JOINT SEALANT.

1	REVISION 02/01/2008	DESIGN ENGINEER	CITY OF OMAHA PUBLIC WORKS DEPARTMENT
2	REVISION 3/12/2009	CITY ENGINEER	**CONCRETE DRIVEWAY DETAILS**
			STANDARD PLATE **1-70** SHEET 1/1
			ISSUE DATE: ..... MARCH 26, 2003

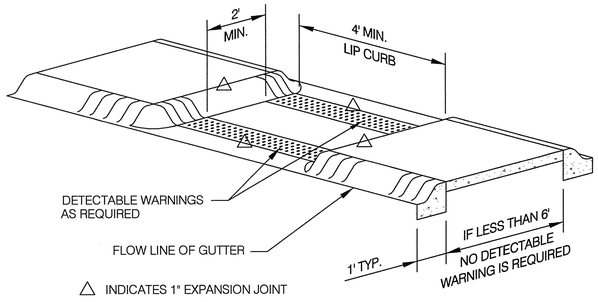

MEDIAN CROSSING DETAIL

NOTE: AREA FROM BACK OF CURB TO BACK OF CURB MEASURED AS RAMP.

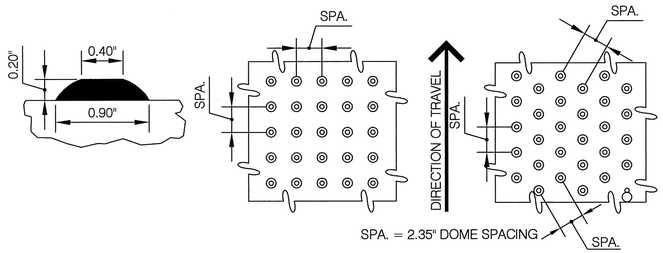

DETECTABLE WARNING TEXTURING DETAILS

APPROVED DETECTABLE WARNING SUPPLIERS CAN BE FOUND AT http://www.ci.omaha.ne.us/publicworks/WarningPanels.pdf

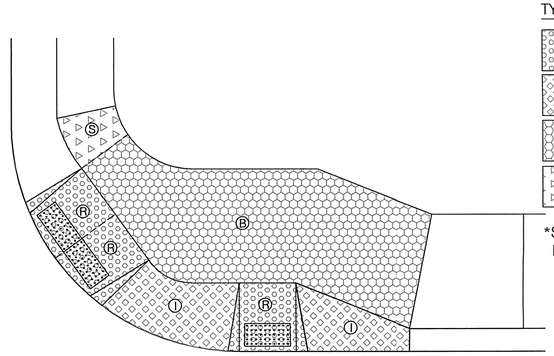

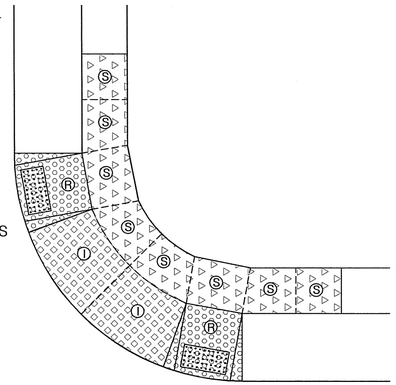

CURB RAMP MEASUREMENT

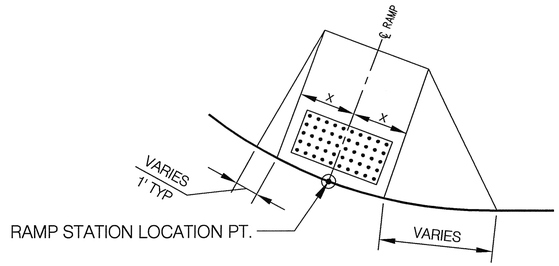

STANDARD RAMP LOCATION IDENTIFIER

	RECOMMENDED	MIN/MAX
TRANSITION SLOPE	1:12	1:10 MAX (RELATIVE)**
RAMP SLOPE (NEW)	1:14	1:12 MAX
RAMP SLOPE (RETRO-FIT)	1:12	1:10 MAX
RAMP WIDTH	5' SIDEWALK SEE TYPICAL - BIKEPATH	4' MIN
RAMP LENGTH (NEW)	6'	2.5' MIN 8' MAX
RAMP LENGTH (RETRO-FIT)	6'	8' MAX - 1:12
		5' MAX - 1:10
		2' MAX - 1:8**
		2' MAX - 1:6** (HISTORIC ONLY)
LANDING	5' x 5'	4' x 5'
SIDEWALK CROSS SLOPE	1.5%	2% MAX
GUTTERLINE COUNTER SLOPE (NEW)	N/A	5% MAX

** MAXIMUM TRANSITION LENGTH TO THE EXISTING SIDWALK IS 30 FT. FROM THE END OF THE PROPOSED SIDEWALK.

GENERAL NOTES

1. CURB RAMPS WITH DETECTABLE WARNINGS SHALL BE CONSTRUCTED WHERE A SIDEWALK ENTERS A STREET AND ANY SIGNALIZED ENTRANCES OR DRIVEWAYS. ALL OTHER CONSTRUCTIONS SHALL COMPLY WITH THE APPROPRIATE POLICIES, REGULATIONS, ETC. THE ENGINEER SHALL RESOLVE ANY DESCREPANCIES.
2. DETAILS SHOWN ARE NOT INTENDED TO ADDRESS ALL SITUATIONS. ALL WORK SHALL BE IN COMPLIANCE WITH ADA GUIDELINES.
3. THE ALIGNMENT OF THE RAMP SHALL BE PERPENDICULAR TO THE CURBLINE OR RADIAL WHEN THE RAMP FALLS IN A RADIUS.
4. ALL SLOPES AND DIMENSIONS SHALL COMPLY WITH THE APPROPRIATE POLICIES, REGULATIONS AND REQUIREMENTS. THE ENGINEER SHALL RESOLVE ANY DESCREPANCIES.
5. THE MINIMUM RAMP LENGTH SHALL BE ONE FOOT OF LENGTH PER INCH OF CURB HEIGHT MEASURED ALONG THE STEEPEST EDGE OF THE RAMP UNLESS APPROVED IN ADVANCE BY THE ENGINEER.
6. A MINIMUM 4' X 5' LANDING/MANEUVERING AREA SHALL BE CONSTRUCTED AT THE TOP OF THE RAMP. THE MAXIMUM CROSS SLOPE SHALL BE 2% IN ANY DIRECTION.
7. RAMP FLARES SHALL BE CONSTRUCTED WHERE THE RAMP IS CONTIGUOUS WITH A WALKING AREA AND A SIDE APPROACH IS DEFINED. RAMP FLARES SHALL BE SLOPED AT 10% (RELATIVE) MAXIMUM PERPENDICULAR TO THE CURB RAMP.
8. THE SURFACE OF ALL CURB RAMPS SHALL RECEIVE A BROOM FINISH TRANSVERSELY TO THE SLOPE OF THE CURB RAMP. ALL RAMP FLARES AND WINGS SHALL RECEIVE A BROOM FINISH.
9. DETECTABLE WARNINGS SHALL CONFORM TO ADA REQUIREMENTS AND EXTEND A MINIMUM WIDTH OF 4' CENTERED IN THE RAMP. FOR RAMPS WIDER THAN 5', MAXIMUM WIDTH SHALL BE DOME PANEL WIDTH PLUS ONE FOOT. WARNINGS SHALL BE LOCATED WITH THE NEAREST EDGE 6" TO 8" FROM THE CURBLINE.
10. THE NORMAL GUTTER LINE PROFILE SHALL BE MAINTAINED AROUND THE RADIUS.
11. ALL CURB RAMPS SHALL HAVE POSITIVE DRAINAGE.
12. A CONTRACTION JOINT SHALL BE PLACED AT EACH CORNER OF DETECTABLE WARNING PANELS AS NOTED ON THE PLANS OR AS RECOMMENDED BY THE MANUFACTURER.
13. RAMPS SHALL BE FORMED AND POURED SEPERATE OF ANY LANDING, IMPRINTED CONCRETE SURFACES, CURB AND GUTTER AND ANY OTHER ADJACENT IMPROVEMENTS UNLESS DUMMY FORMS ARE USED TO ESTABLISH ALL CRITICAL SLOPES DURING STRIKEOFF AND FINISHING OPERATIONS.
14. REMOVE ANY DUMMY FORMS AND PLACE TRUNCATED DOME PANELS IN A MANNER THAT DOES NOT DISTURB THE SURROUNDING FINISHED CONCRETE SURFACE.
15. INSTALL ½" ONLY EXPANSION JOINTS AT ALL SIDEWALK/BIKEPATH TO SIDEWALK/BIKEPATH CONNECTIONS. INSTALL 1" ONLY EXPANSION MATERIAL ALONG BACK OF CURB ADJACENT TO ALL CONCRETE. INSTALL BOND BREAKER ACCEPTABLE TO THE ENGINEER AROUND ALL STRUCTURES.
16. ALL RAMP LOCATIONS SHALL BE IDENTIFIED IN THE PLANS BY STATION AND OFFSET, AND BY NORTHING AND EASTING COORDINATES.
17. JOINTIING SHOWN FOR ILLUSTRATIVE PURPOSES ONLY. ALL JOINTING SHALL BE IN ACCORDANCE WITH ACCEPTED PRACTICES. AT A MINIMUM, JOINTING SHALL SEPERATELY DEFINE RAMPS AND LANDING AREAS.
18. SEE CITY OF OMAHA WEBSITE, WWW.CI.OMAHA.NE.US OR CONTACT THE PUBLIC WORKS FOR AN APPROVED MATERIALS LIST OF DETECTABLE WARNINGS.

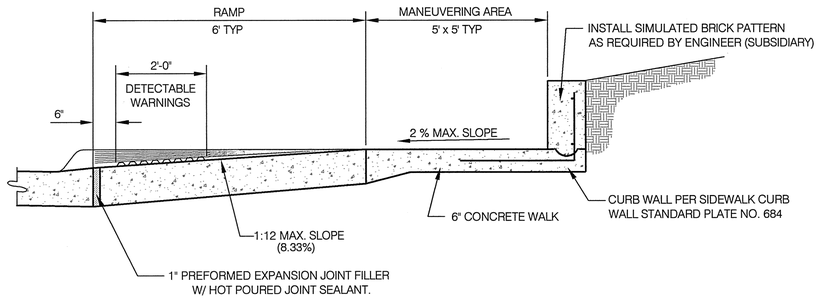

COMBINATION RAMP SECTION

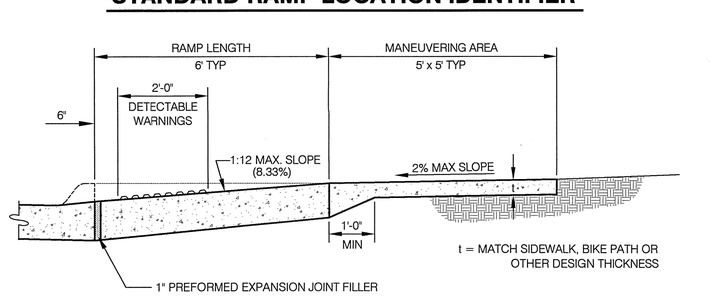

TYPICAL CURB RAMP LONGITUDINAL SECTION

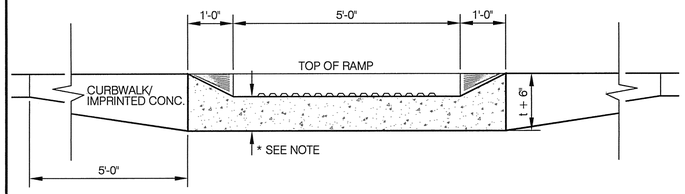

TYPICAL NON-FLARED RAMP SECTION

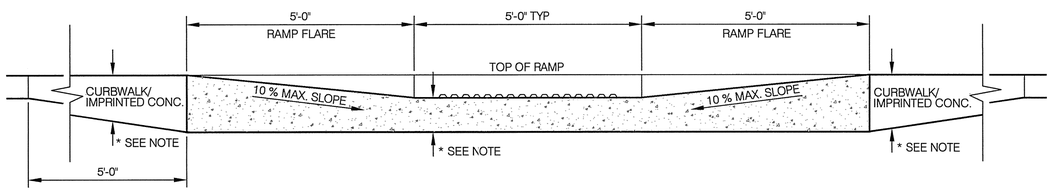

CURB RAMP SECTION WITH 10% SIDEFLARES

1 ALL NOTES AND DETAILS REVISED FROM PREVIOUS.

* RAMP, CURBWALK, IMPRINTED SURFACING ETC. THICKNESS SHALL BE SAME AS THICKNESS OF PAVEMENT FROM OUTER EDGE OF RAMP TO OUTER EDGE OF RAMP.

1	REVISED 4/7/2008	Kirk R Pfeiff DESIGN ENGINEER	CITY OF OMAHA PUBLIC WORKS DEPARTMENT
		Charles Krupala CITY ENGINEER	CONCRETE CURB RAMP TYPICAL DETAILS, GENERAL NOTES AND MEASUREMENT DETAILS
			STANDARD PLATE 1-82 SHEET 1/4

TYPICAL SIDE APPROACH CURBWALK

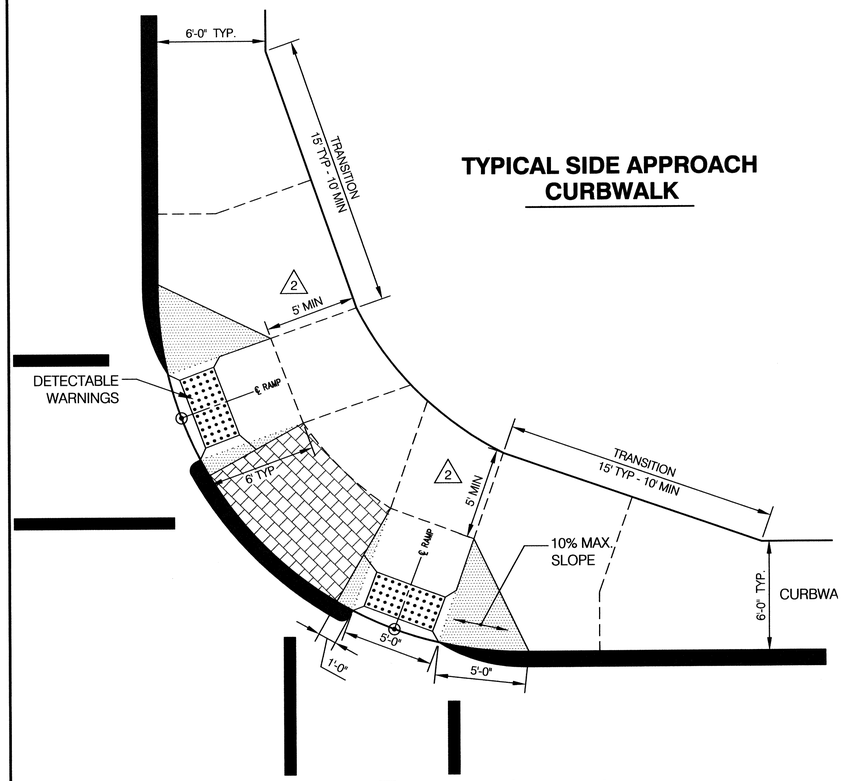

TYPICAL BACK APPROACH CURBWALK

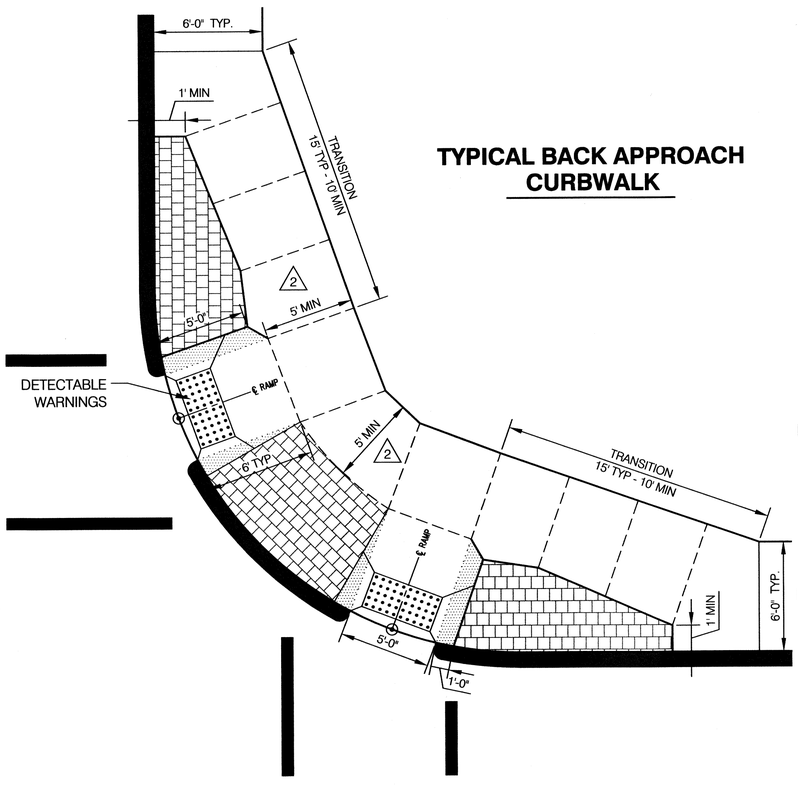

TYPICAL PLAN 10' BIKEPATH

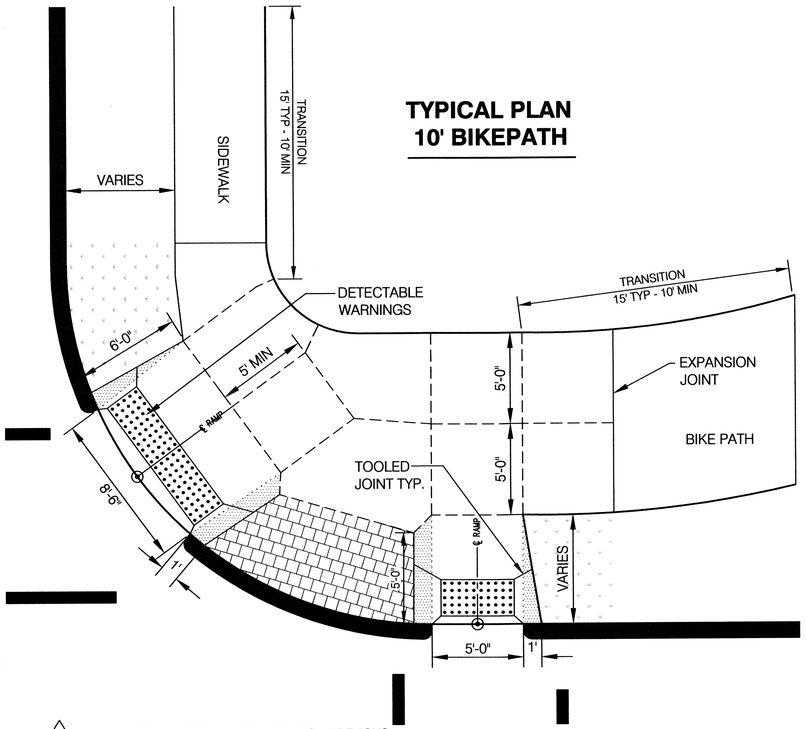

1 ALL NOTES AND DETAILS REVISED FROM PREVIOUS.

TYPICAL PLAN SETBACK SIDEWALK

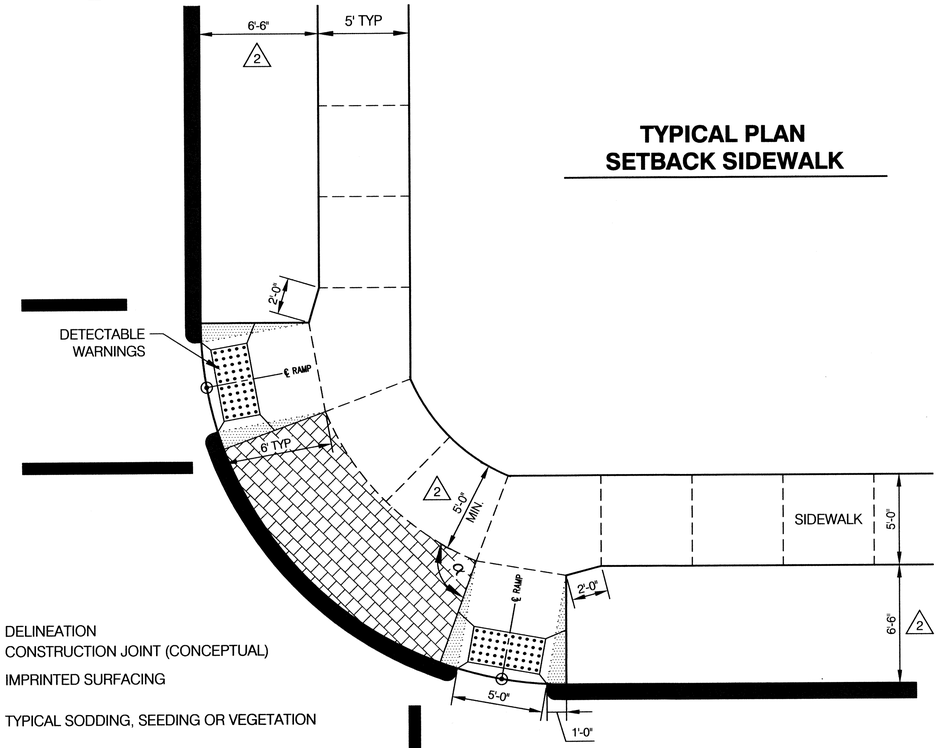

LEGEND

- = DELINEATION
- = CONSTRUCTION JOINT (CONCEPTUAL)
- = IMPRINTED SURFACING
- = TYPICAL SODDING, SEEDING OR VEGETATION

BIKE PATH PLAN 10' BIKEPATH W/ 2' IMPRINTED SURFACING

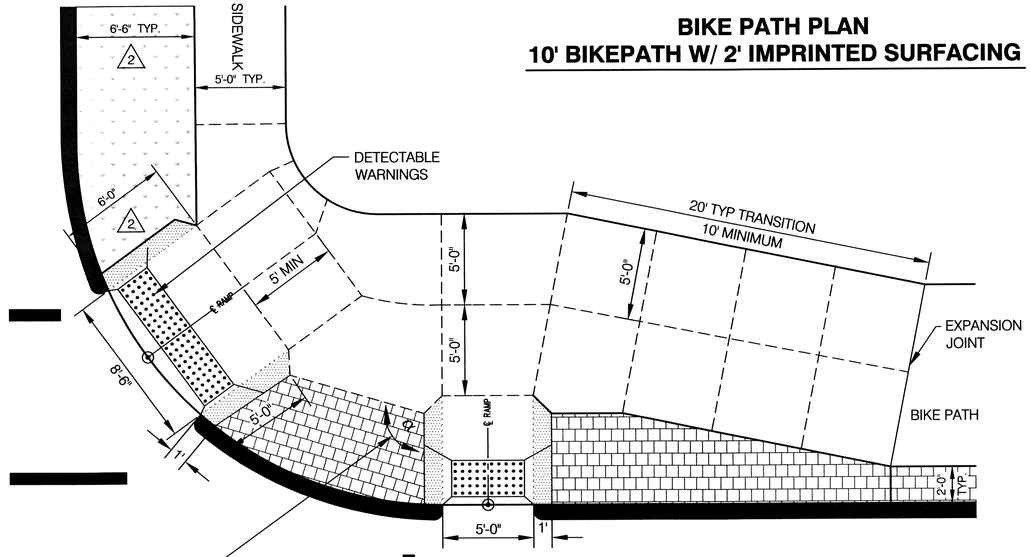

NOTE: WHEN α IS LESS THEN 90° MODIFY SIDEWALK AND RAMP CONNECTION.

1	REVISED 4/7/2008	DESIGN ENGINEER	CITY OF OMAHA PUBLIC WORKS DEPARTMENT
2	REVISION 2/13/2009	CITY ENGINEER	CONCRETE CURB RAMP DETAILS TYPICAL NEW CONSTRUCTION OPTIONS
			STANDARD PLATE 1-82 SHEET 2/4

SMALL RADIUS PLAN
4' SIDEWALK....4' SETBACK

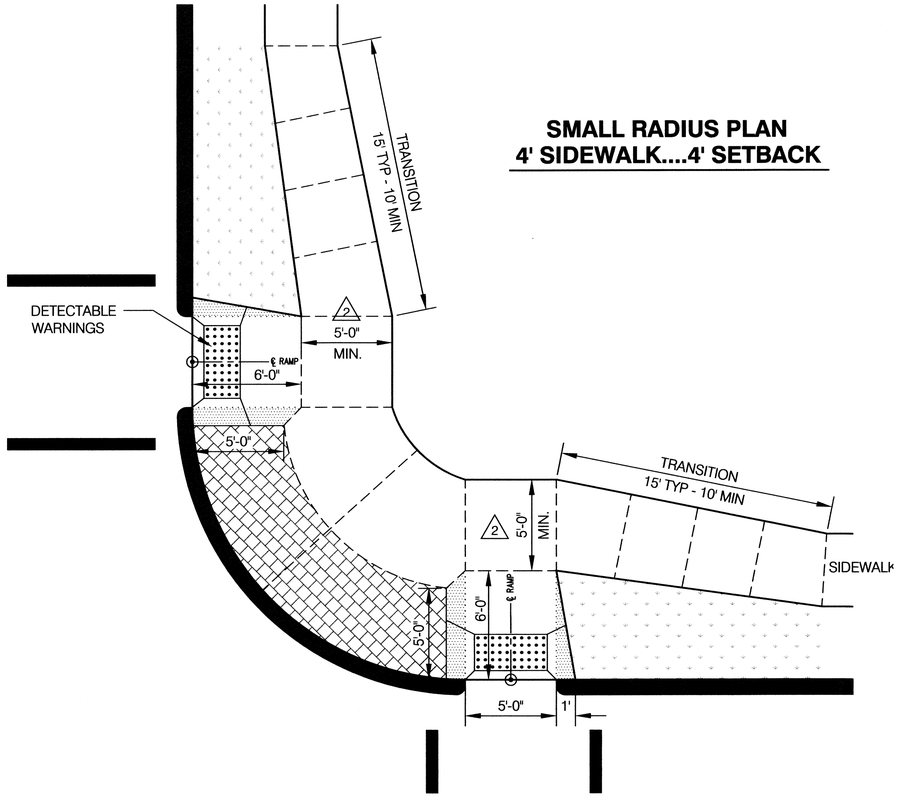

SINGLE RAMP PLAN
4' SIDEWALK....4' SETBACK

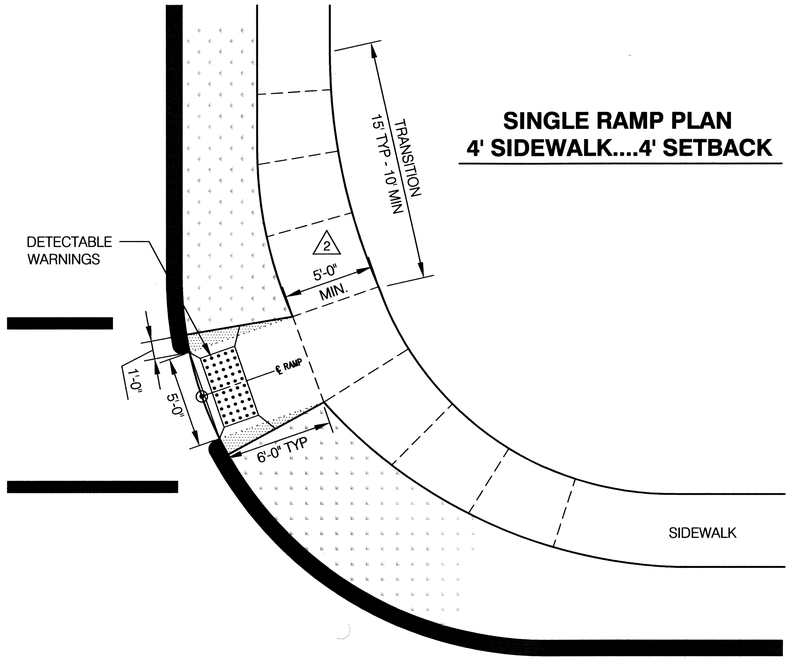

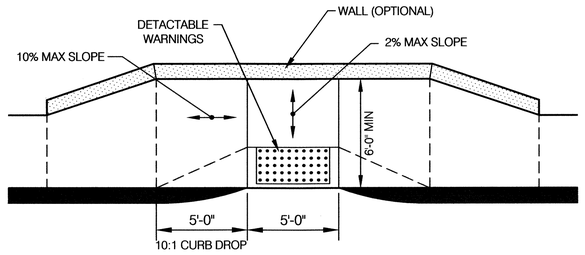

TYPICAL MID-BLOCK STYLE PLAN
(NO SETBACK OPTION SHOWN)

MIDBLOCK STYLE RAMPS ARE DEFINED AS RAMPS BUILT ALONG TANGENT CURB SEGMENTS OUTSIDE THE CORNER RADII.

1 ALL NOTES AND DETAILS REVISED FROM PREVIOUS.

TYPICAL PLAN
4' SIDEWALK....10' SETBACK

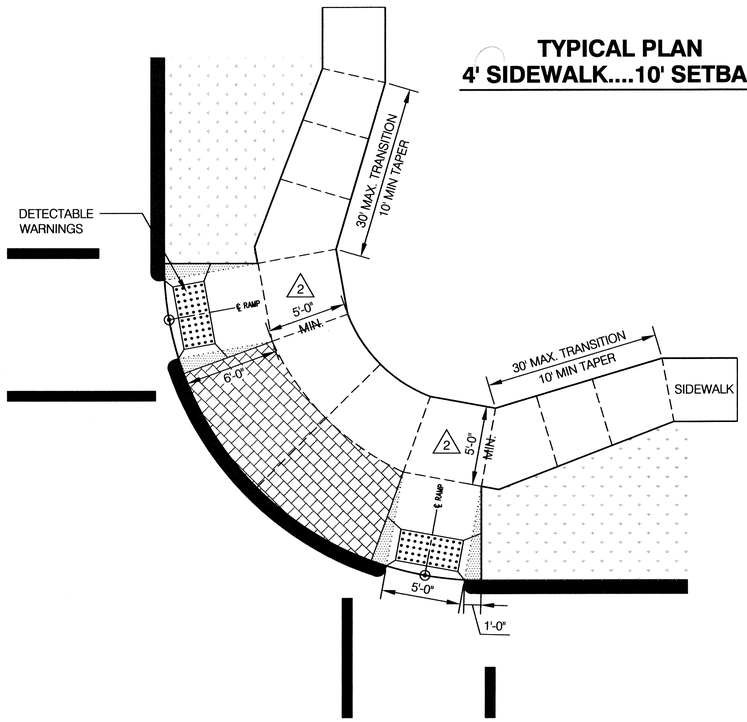

SHORTENED RAMP PLAN*
4' SIDEWALK....4' SETBACK

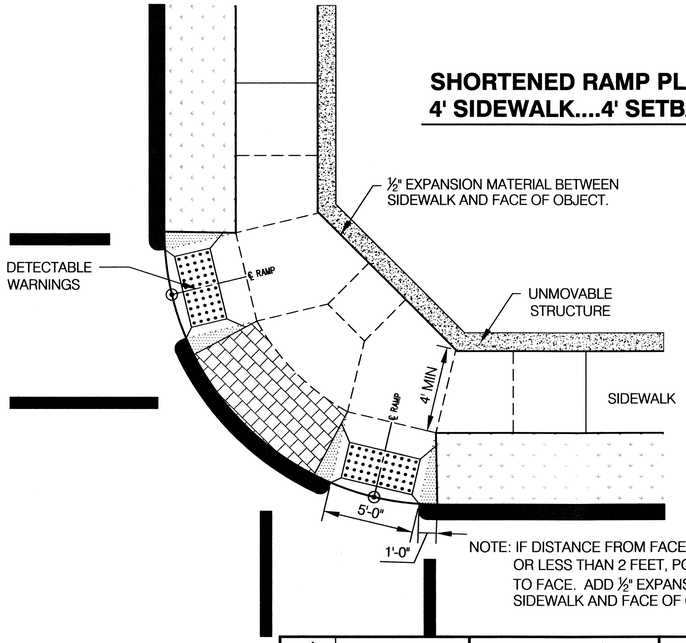

NOTE: IF DISTANCE FROM FACE OF OBJECT IS EQUAL TO OR LESS THAN 2 FEET, POUR SIDEWALK FULL WIDTH TO FACE. ADD ½" EXPANSION MATERIAL BETWEEN SIDEWALK AND FACE OF OBJECT.

MID-BLOCK STYLE PLAN*
4' SIDEWALK....4' SETBACK

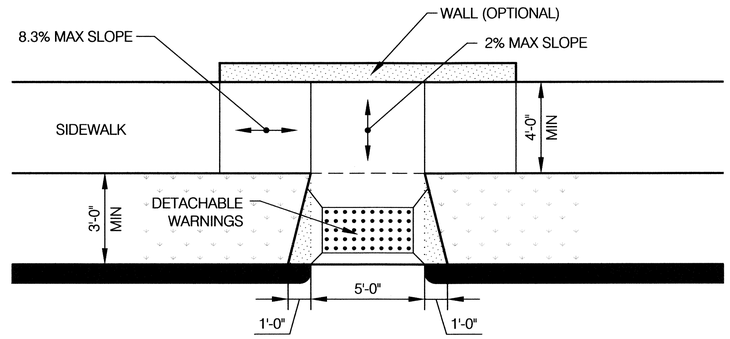

LEGEND

- ..... = DELINEATION
- – – – – = CONSTRUCTION JOINT (CONCEPTUAL)
- = IMPRINTED SURFACING
- = TYPICAL SODDING, SEEDING OR VEGETATION

1	REVISED 4/7/2008	
2	REVISION 2/13/2009	
		DESIGN ENGINEER
		CITY ENGINEER

CITY OF OMAHA PUBLIC WORKS DEPARTMENT

CONCRETE CURB RAMP DETAILS
TYPICAL RETRO-FIT OPTIONS

STANDARD PLATE 1-82

SHEET 3/4

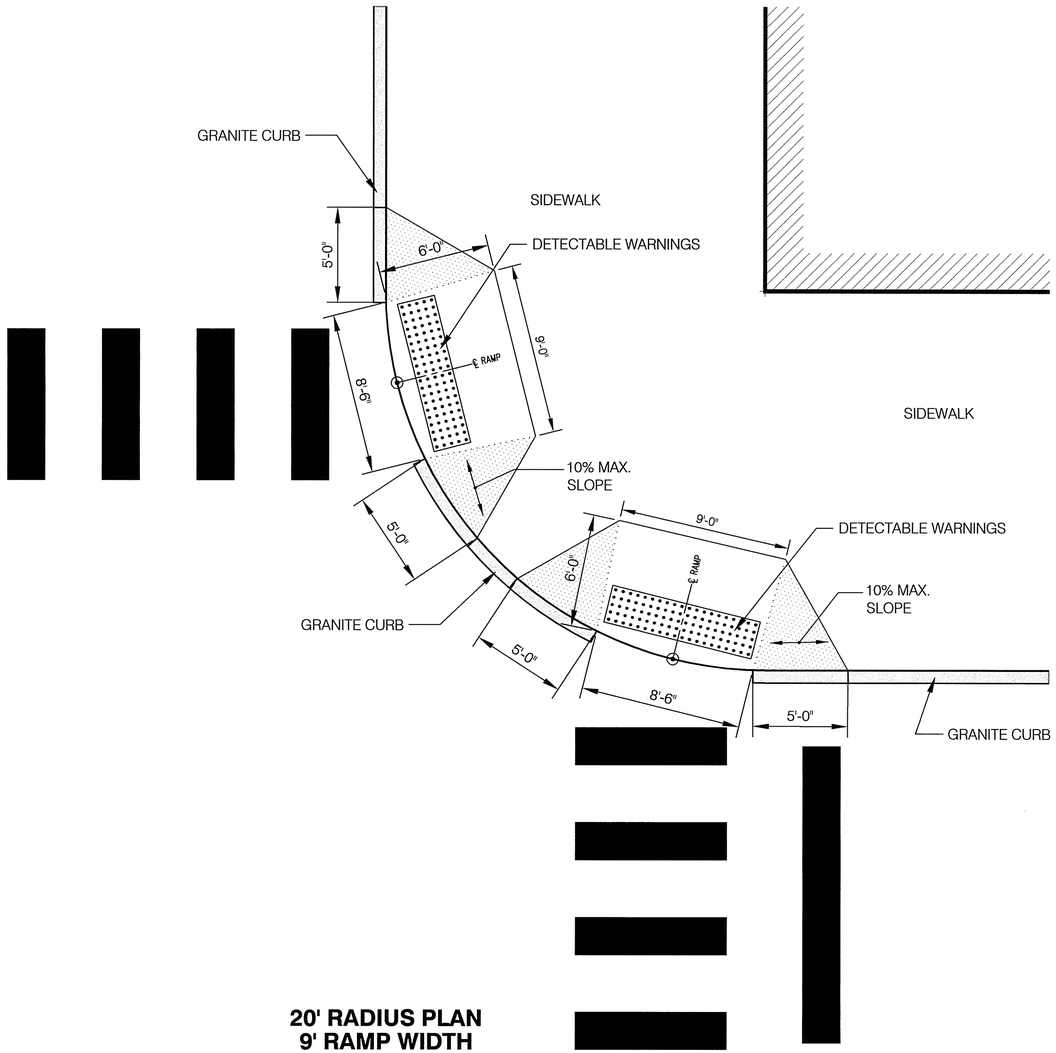

20' RADIUS PLAN
9' RAMP WIDTH

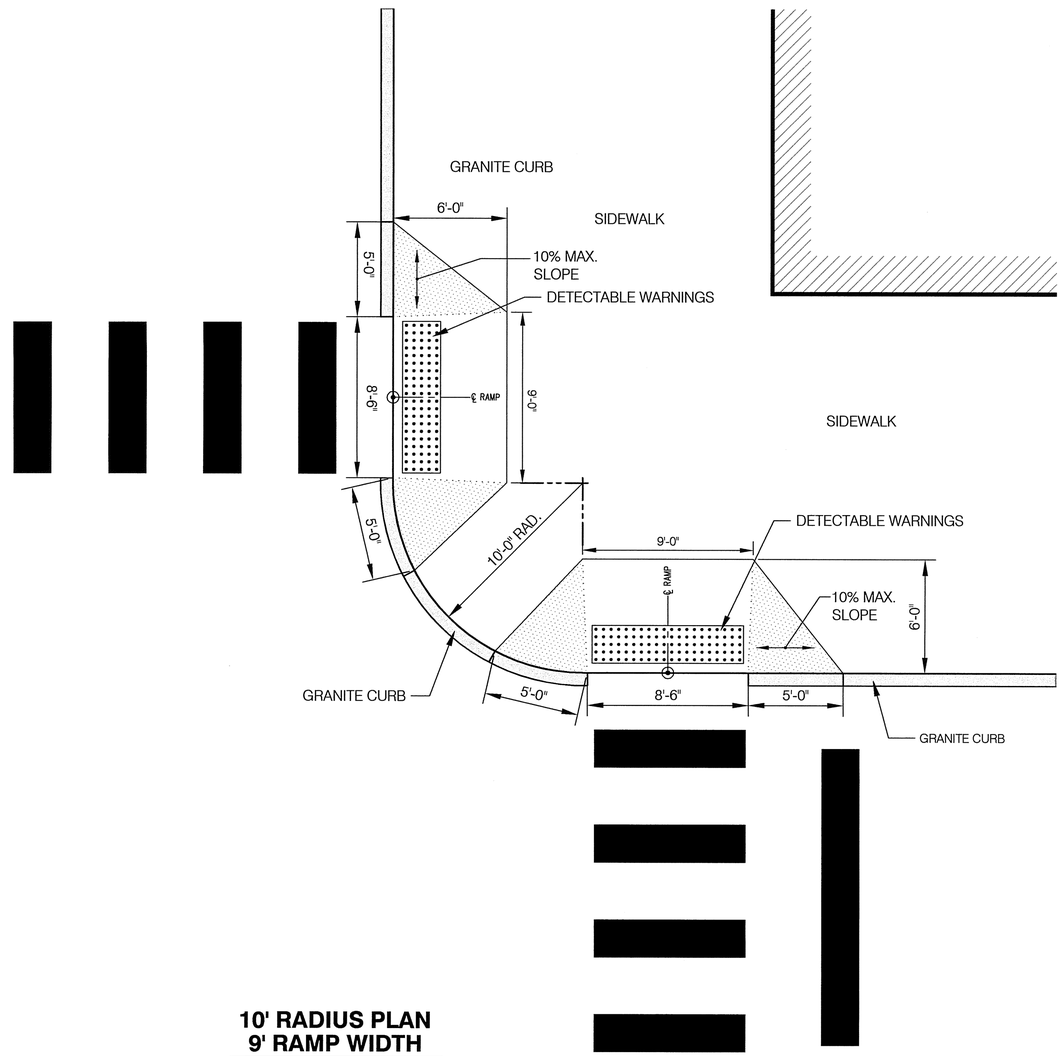

10' RADIUS PLAN
9' RAMP WIDTH

LEGEND

- = DELINEATION
- = CONSTRUCTION JOINT (CONCEPTUAL)
- = IMPRINTED SURFACING
- = TYPICAL SODDING, SEEDING OR VEGETATION

CENTRAL BUSINESS DISTRICT IS DEFINED BY THE AREA WITHIN AND ADJACENT TO THE MISSOURI RIVER, INTERSTATE 480, CUMING STREET AND LEAVENWORTH STREET.

1 ALL NOTES AND DETAILS REVISED FROM PREVIOUS.

1	REVISED 4/7/2008	DESIGN ENGINEER	CITY OF OMAHA PUBLIC WORKS DEPARTMENT
		CITY ENGINEER	**CONCRETE CURB RAMP DETAILS CENTRAL BUSINESS DISTRICT**
			STANDARD PLATE 1-82 SHEET 4/4

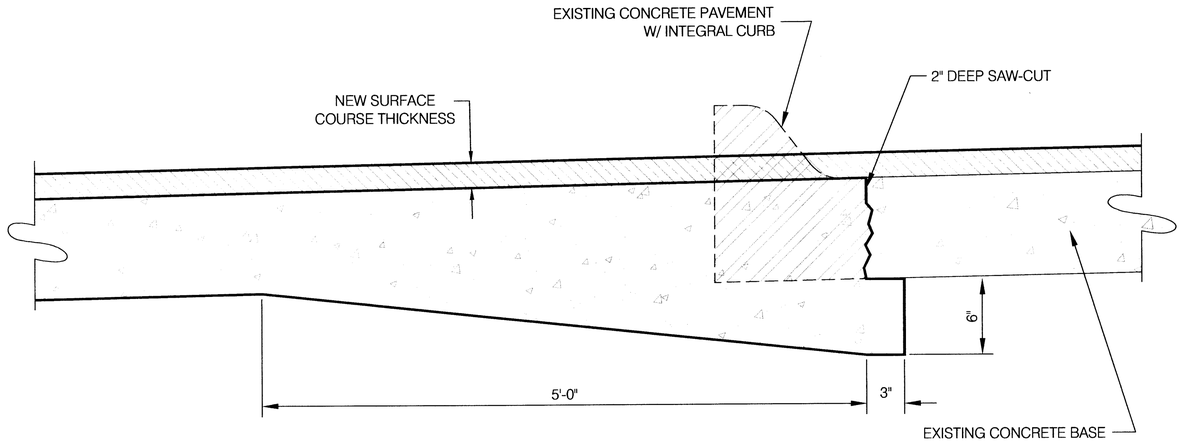

THICKENED EDGE JOINT

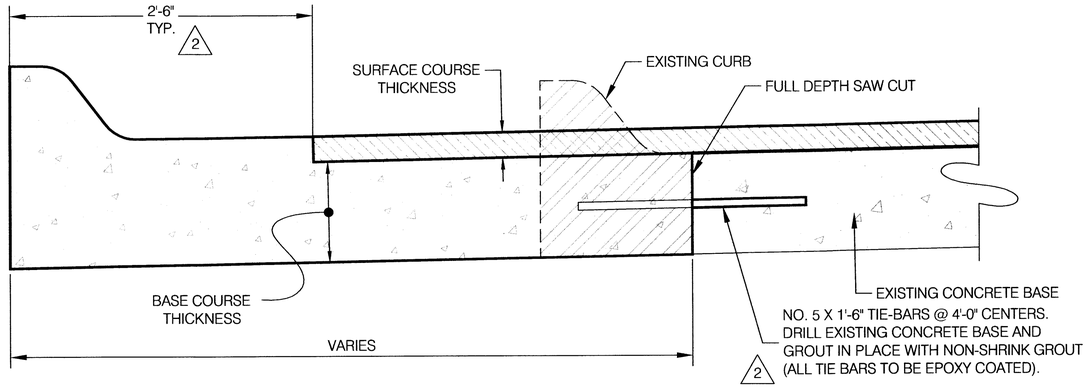

DOWELED JOINT

PAVEMENT WIDENING AND SURFACING

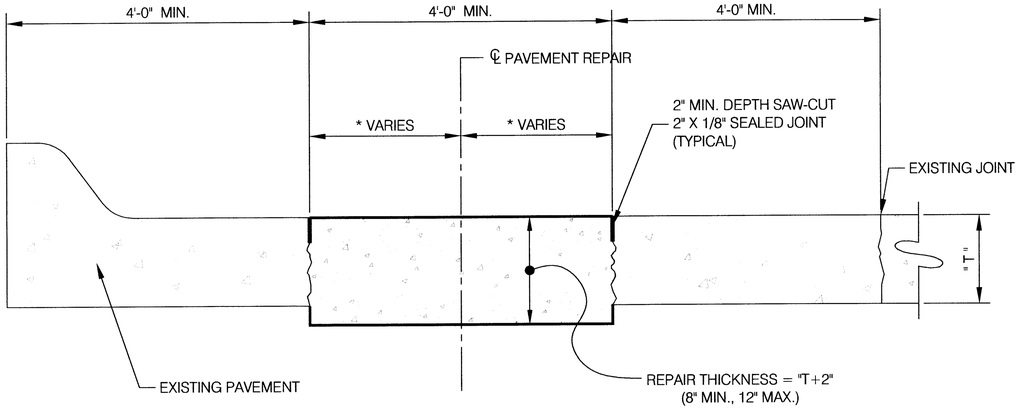

CONCRETE PAVEMENT REPAIR DETAIL

CONCRETE PAVEMENT REPAIR NOTES

1. CONSTRUCTION SHALL CONFORM TO CITY OF OMAHA STANDARD SPECIFICATIONS FOR PUBLIC WORKS CONSTRUCTION.
2. THE SIZE OF REPAIR* SHALL BE DESIGNATED BY THE ENGINEER.
3. CONCRETE SHALL BE L6. (1)
4. TRANSVERSE JOINTS SHALL BE PERPENDICULAR TO STREET CENTERLINE. NO LESS THAN FOUR (4) FEET OF THE REMAINING PANEL FROM ANY JOINT SHALL REMAIN AFTER STREET CUT REPAIR.
5. REPAIR AREA THICKNESS SHALL BE EQUAL TO THE EXISTING PAVEMENT PLUS 2", OR 8" MINIMUM AND 12" MAXIMUM.

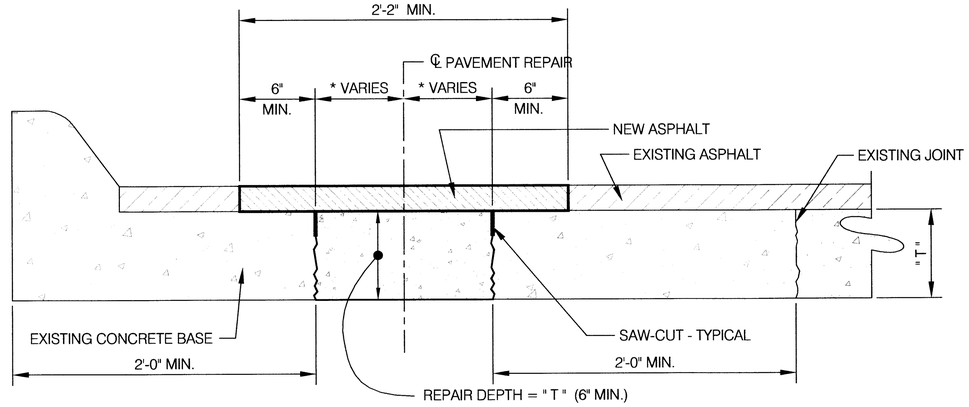

ASPHALT PAVEMENT REPAIR DETAIL

ASPHALT SURFACED PAVEMENT REPAIR NOTES

1. CONSTRUCTION SHALL CONFORM TO CITY OF OMAHA STANDARD SPECIFICATIONS FOR PUBLIC WORKS CONSTRUCTION.
2. THE SIZE OF REPAIR* SHALL BE DESIGNATED BY THE ENGINEER.
3. THE CONCRETE BASE REPAIR THICKNESS SHALL BE EQUAL TO THE EXISTING BASE, OR 6" MINIMUM AND 12" MAXIMUM.
4. CURING COMPOUND SHALL BE BITUMINOUS LIQUID.
5. NEW ASPHALT SHALL MATCH EXISTING ASPHALT ELEVATION.

1	REVISION 02/01/2008	DESIGN ENGINEER	CITY OF OMAHA PUBLIC WORKS DEPARTMENT
2	REVISION 9/23/2010	PUBLIC WORKS DIRECTOR	CONCRETE PAVEMENT REPAIR DETAILS PAVEMENT WIDENING AND SURFACING
			STANDARD PLATE 2-01 SHEET 1/1
			ISSUE DATE: ... MARCH 27, 2006

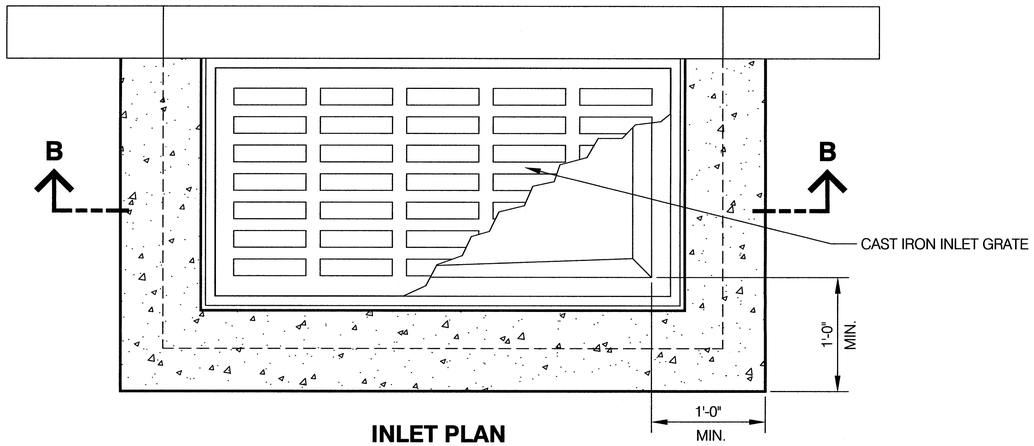

INLET PLAN

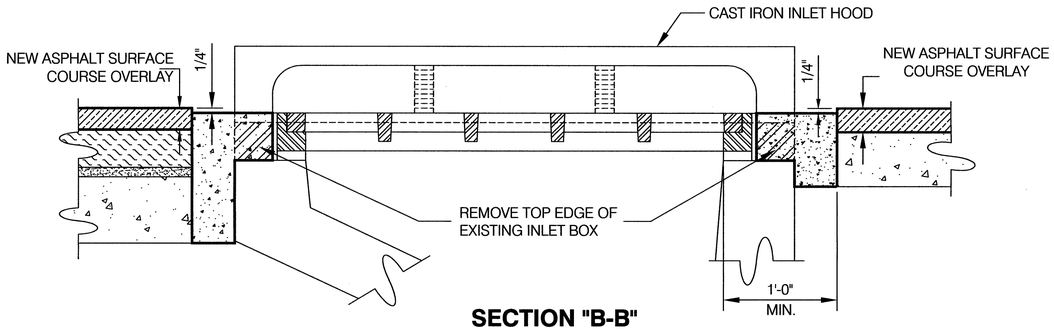

SECTION "B-B"
GRATE INLET ADJUSTMENT DETAIL

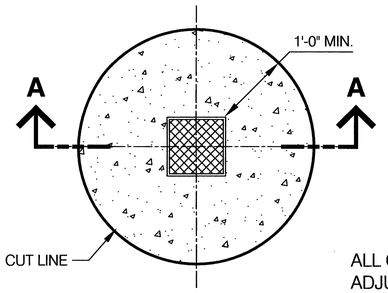

UTILITY COVER

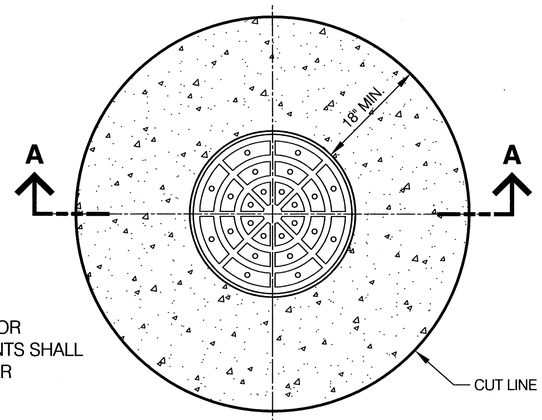

ALL CUTS FOR ADJUSTMENTS SHALL BE CIRCULAR

MANHOLE COVER

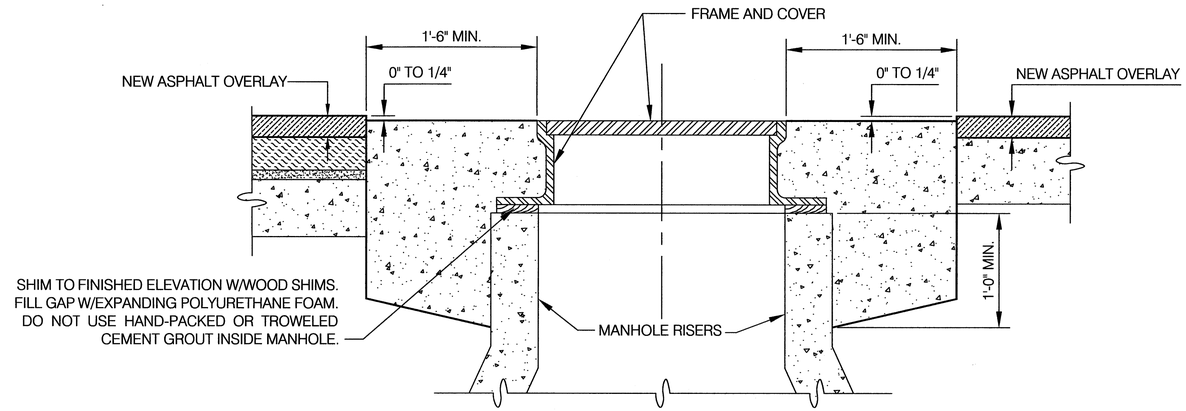

SECTION "A-A" COVER ADJUSTMENT

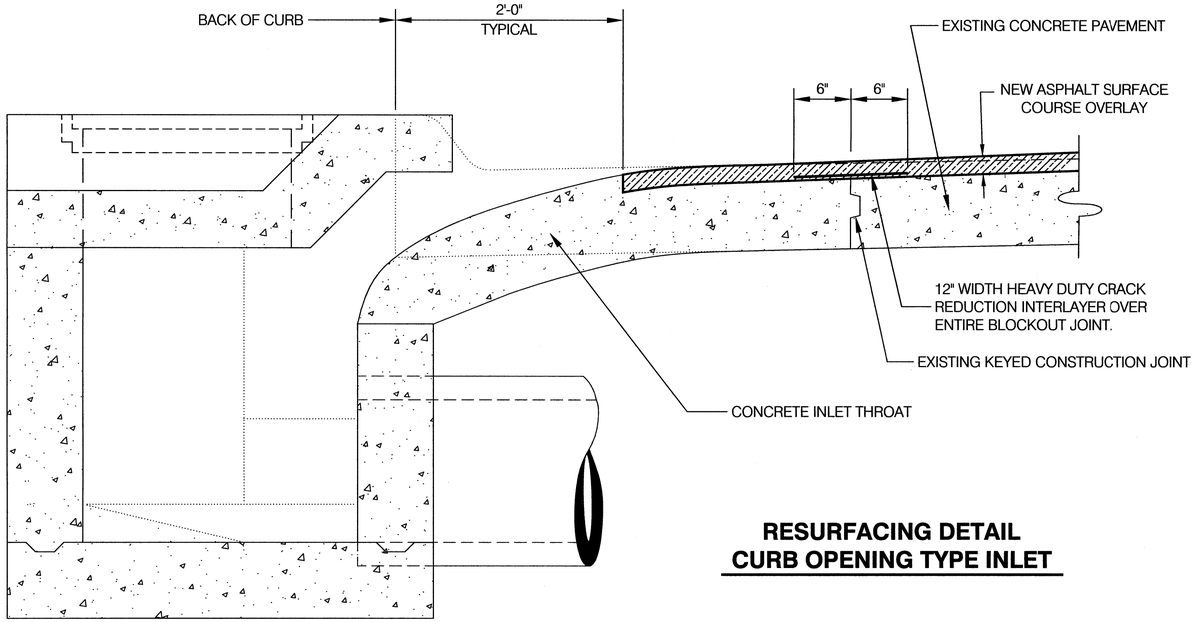

RESURFACING DETAIL
CURB OPENING TYPE INLET

NOTES

1. ADJUST MANHOLE COVERS, UTILITY COVERS AND INLETS TO GRADE FOLLOWING STREET RESURFACING.
2. UTILITY COMPANIES SHALL IDENTIFY, LOCATE AND MARK THEIR MANHOLES / COVERS PRIOR TO RESURFACING. THE CONTRACTOR SHALL BE RESPONSIBLE FOR LOCATING AND ADJUSTING ANY UNMARKED BURIED COVERS.
3. REMOVE EXISTING PAVEMENT AROUND UTILITY TO ALLOW FOR ADJUSTMENT. REMOVE SIDEWALL OR FRAME AND ALL CONCRETE GROUT TO FORM A CONTINUOUS BED FOR THE FRAME TO BE PLACED ON. ADJUST FRAME TO GRADE USING CONCRETE OR BRICK. STRIKE OFF EXCESS GROUT ON THE INSIDE OF THE FRAME TO A SMOOTH FINISH. CONCRETE FOR THE ADJUSTING SLAB SHALL BE L-85. SLAB SHALL BE CURED WITH AN ACCEPTABLE LIQUID CURE. CONCRETE SHALL BE VIBRATED AFTER PLACEMENT.
4. THE CONTRACTOR SHALL REINSTALL COVERS AND FRAMES IN ADJUSTED LOCATIONS. CONTRACTOR SHALL EXCHANGE AND REPLACE ANY UNSUITABLE CASTINGS PRIOR TO MAKING ADJUSTMENTS.
5. CONTRACTOR SHALL CONSTRUCT FLAT TOP SLAB WHEN MANHOLE ADJUSTMENT REQUIRES REMOVING PART OR ALL OF CONE SECTION.
6. MANHOLE ADJUSTMENTS IN EXCESS OF 4 INCHES SHALL BE ACCOMPLISHED WITH PRECAST RISER SECTIONS AND MEASURED FOR PAYMENT AS THE BID ITEM "ADJUST MANHOLE TO GRADE".

DESIGN ENGINEER

CITY ENGINEER

CITY OF OMAHA PUBLIC WORKS DEPARTMENT

ASPHALT PAVEMENT RESURFACING ADJUSTMENT DETAILS

STANDARD PLATE 2-10R1

SHEET 1/1

ISSUE DATE: ..... MARCH 27, 2006

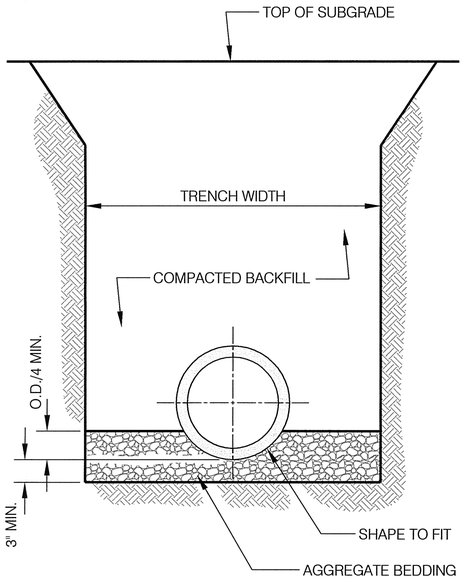

RIGID PIPE BEDDING

P.C.C. --- V.C.P. --- D.I.P.

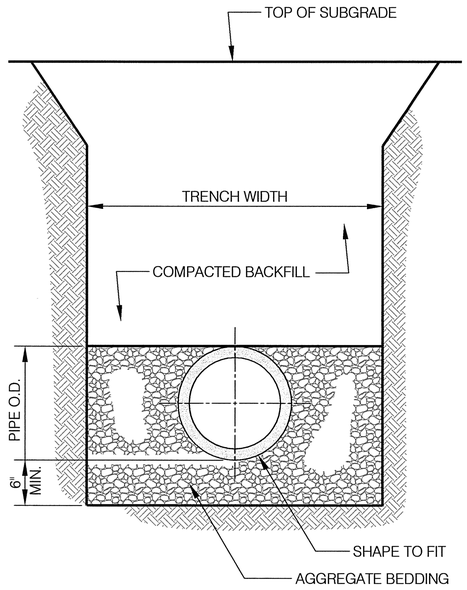

SEMI-RIGID PIPE BEDDING

P.V.C. COMPOSITE TRUSS

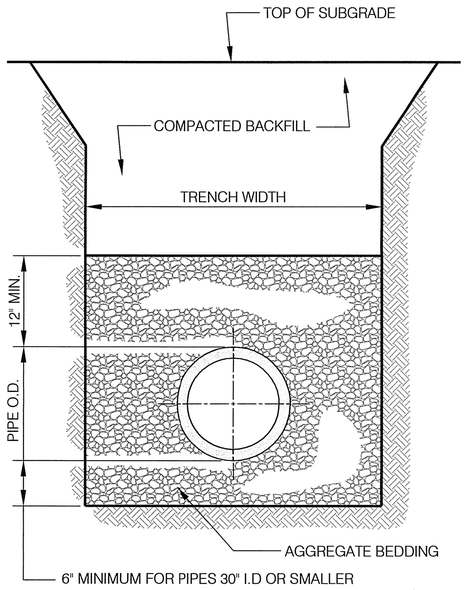

FLEXIBLE PIPE BEDDING

SOLID WALL P.V.C.

SANITARY SEWER TYPES ..... AGGREGATE BEDDING DETAILS

TABLE A

SEWER PIPE TRENCH WIDTH

PIPE DIAMETER (INCHES)	RIGID AND SEMI-RIGID PIPE		FLEXIBLE PIPE	
	MINIMUM TRENCH WIDTH (FEET)	MAXIMUM TRENCH WIDTH (FEET)	MINIMUM TRENCH WIDTH (FEET)	MAXIMUM TRENCH WIDTH (FEET)
8"	X	X	2.1	3.0
10"	X	X	2.3	3.0
12"	3.3	4.5	2.4	3.5
15"	3.6	4.5	2.7	4.0
18"	3.9	5.0	3.0	4.0
21"	4.2	5.5	3.3	4.5
24"	4.5	5.5	3.6	4.5
27"	4.8	6.5	3.9	5.0
30"	5.1	6.5	X	X
36"	5.7	7.5	X	X
42"	6.3	8.0	X	X
48"	6.8	9.0	X	X
54"	7.4	10.0	X	X
60"	8.0	10.0	X	X
66"	8.8	11.0	X	X
72"	9.6	13.0	X	X
78"	10.3	14.0	X	X
84"	11.0	14.0	X	X
90"	12.0	15.0	X	X

NOTES

1. **ALL SEWERS SHALL BE INSTALLED AS SHOWN UNLESS OTHERWISE CALLED FOR BY THE PLANS, THE SPECIAL PROVISIONS OR AUTHORIZED BY THE ENGINEER.**

[1] 2. AGGREGATE BEDDING SHALL CONFORM TO THE MATERIAL REQUIREMENTS OF SECTION 701.01 OF THE STANDARD SPECIFICATIONS.

[1] 3. THE MINIMUM AGGREGATE BEDDING DEPTH BELOW THE PIPE FOR PCC STORM SEWERS SHALL CONFORM TO THE FOLLOWING:

INTERNAL PIPE DIAMETER	MINIMUM BEDDING DEPTH
30" OR SMALLER	6"
OVER 30" TO 60"	12"
OVER 60" TO 84"	18"

4. SANITARY SEWER PIPE SHALL BE GENERALLY CLASSIFIED AS FOLLOWS:
   RIGID PIPE: R.C.P., D.I.P., V.C.P.
   SEMI-RIGID: PVC COMPOSITE TRUSS, 200 PSI (ASTM D2680)
   FLEXIBLE: SOLID WALL PVC, CORRUGATED PVC, PROFILE WALL PVC (46 TO 115 PSI)

5. THE MINIMUM AND MAXIMUM TRENCH WIDTHS FOR RIGID, SEMI-RIGID AND FLEXIBLE PIPE SHALL BE AS SHOWN IN TABLE A.

6. SOIL BACKFILL AND TRENCH COMPACTION SHALL CONFORM TO THE REQUIRMENTS OF SECTION 701.03 (R), AND TABLE 701.03.

7. IF UNSTABLE TRENCH SUBGRADE CONDITIONS ARE ENCOUNTERED, ADDITIONAL AGGREGATE BEDDING OR FOUNDATION ROCK SHALL BE BE PLACED BELOW THE BEDDING AGGREGATE TO STABILIZE THE TRENCH AS DIRECTED BY THE ENGINEER.
   FOUNDATION ROCK SHALL CONSIST OF 3" MAXIMUM CRUSHED ROCK MEETING THE GRADATION REQUIREMENTS OF ASTM C 33, CLASS 2.

8. GEOTEXTILE FABRIC SHALL HAVE A MINIMUM LONG TERM DESIGN STRENGTH OF 400 LBS./FT. IN BOTH THE MACHINE AND CROSS-MACHINE DIRECTIONS.

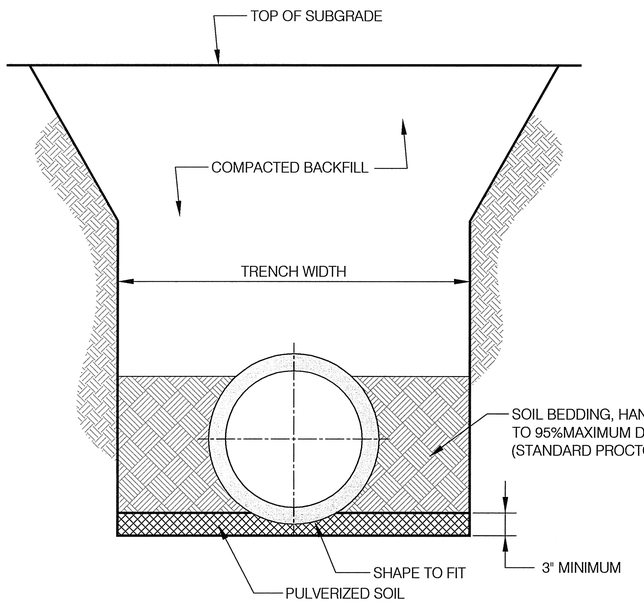

[1] ***PIPES 30" DIAMETER OR SMALLER WITH SOIL BEDDING**

* ONLY IF SPECIFICALLY INDICATED IN THE CONTRACT DOCUMENTS.

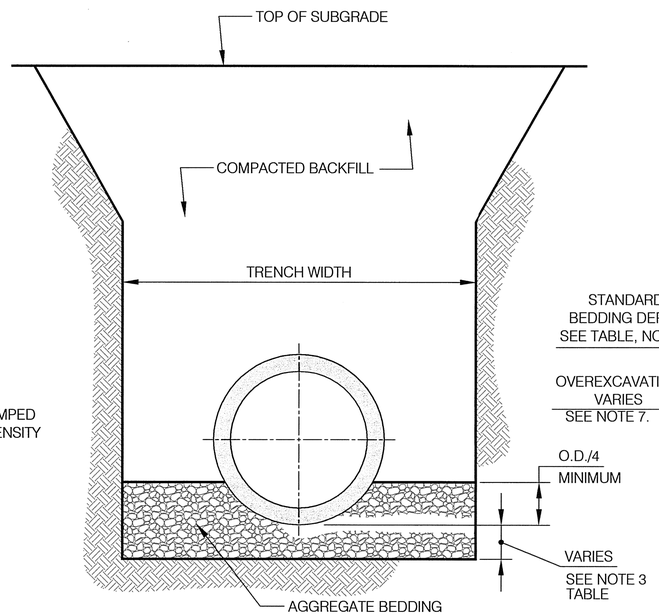

[1] **PIPES GREATER THAN 15" TO 84" DIAMETER WITH AGGREGATE BEDDING**

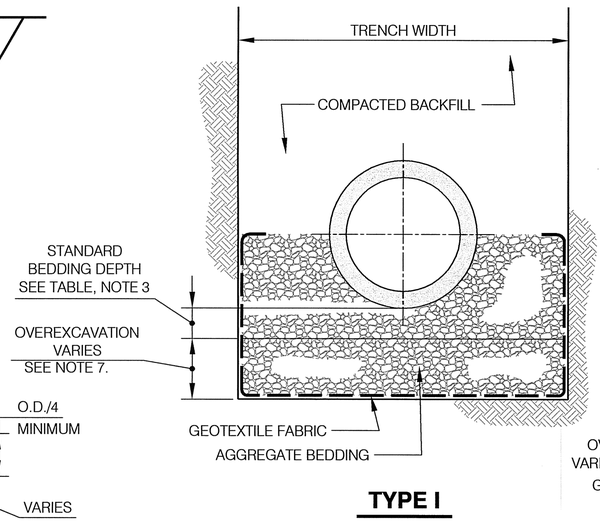

TYPE I

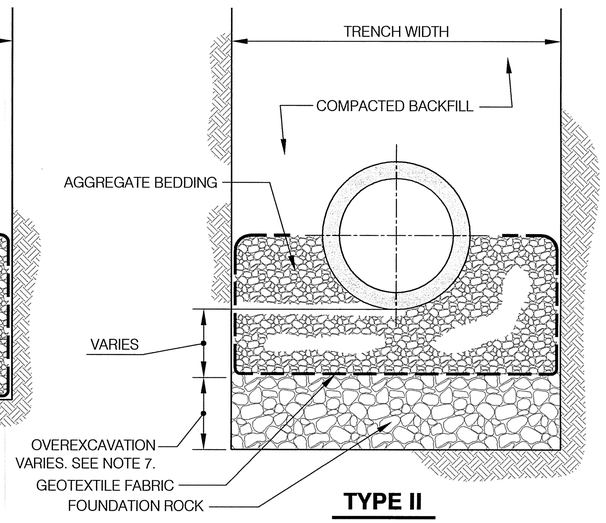

TYPE II

TRENCH STABILIZATION / OVEREXCAVATION DETAILS

STORM SEWER BEDDING DETAILS

[1]	REVISION 02/01/2008	
		DESIGN ENGINEER
		CITY ENGINEER

CITY OF OMAHA PUBLIC WORKS DEPARTMENT

SEWER BEDDING DETAILS

STANDARD PLATE 3-01

SHEET 1/1

ISSUE DATE: ... OCTOBER 6, 2003

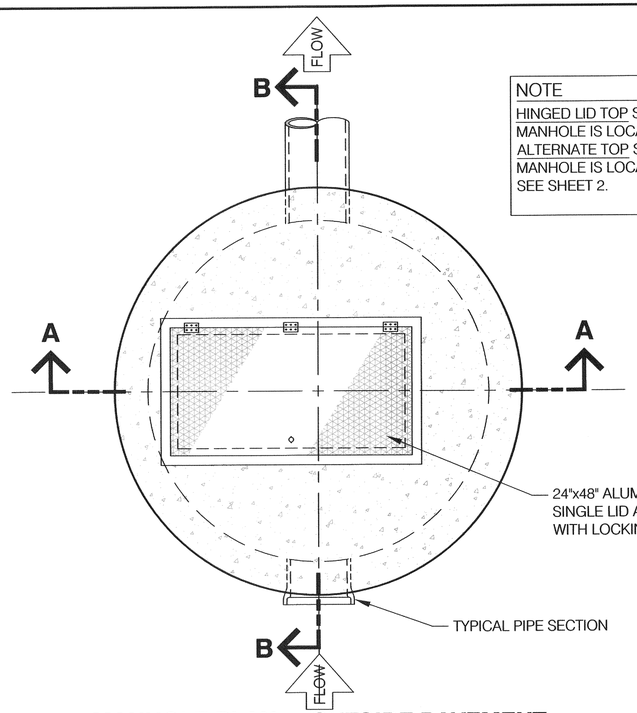

MANHOLE PLAN.....OUTSIDE PAVEMENT

NOTE

HINGED LID TOP SHALL BE CONSTRUCTED WHEN MANHOLE IS LOCATED OUTSIDE PAVEMENT AREA. ALTERNATE TOP SHALL BE CONSTRUCTED WHEN MANHOLE IS LOCATED WITHIN PAVEMENT.
SEE SHEET 2.

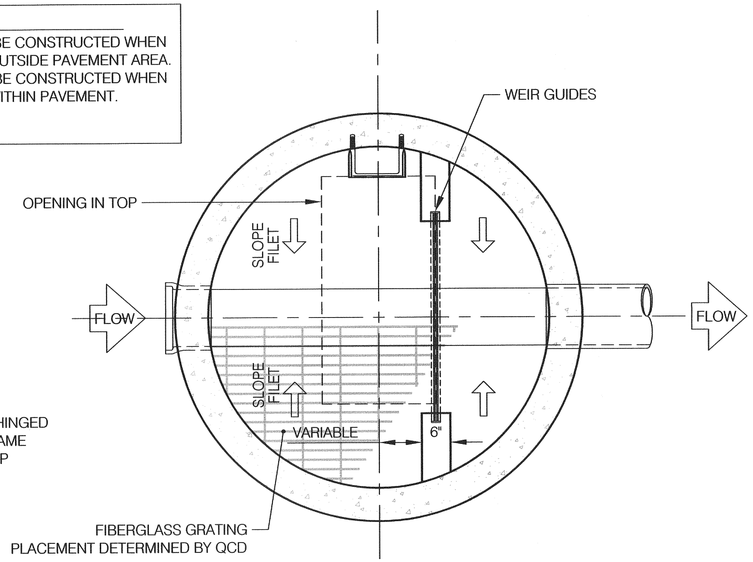

INTERIOR PLAN

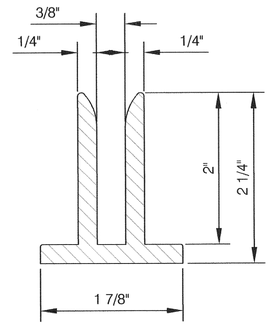

WEIR GUIDE DETAIL

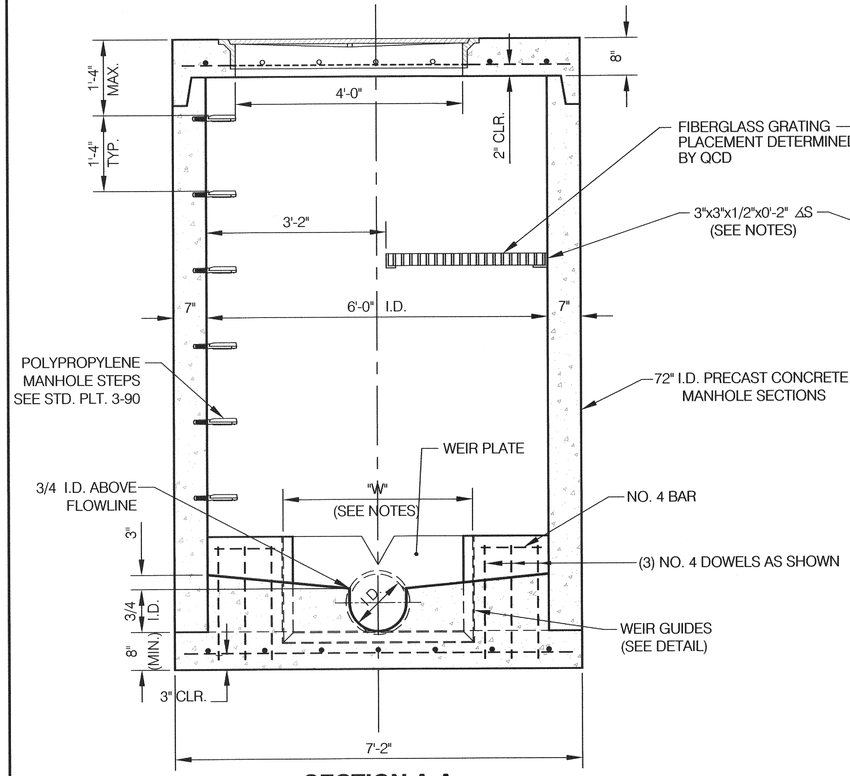

SECTION A-A

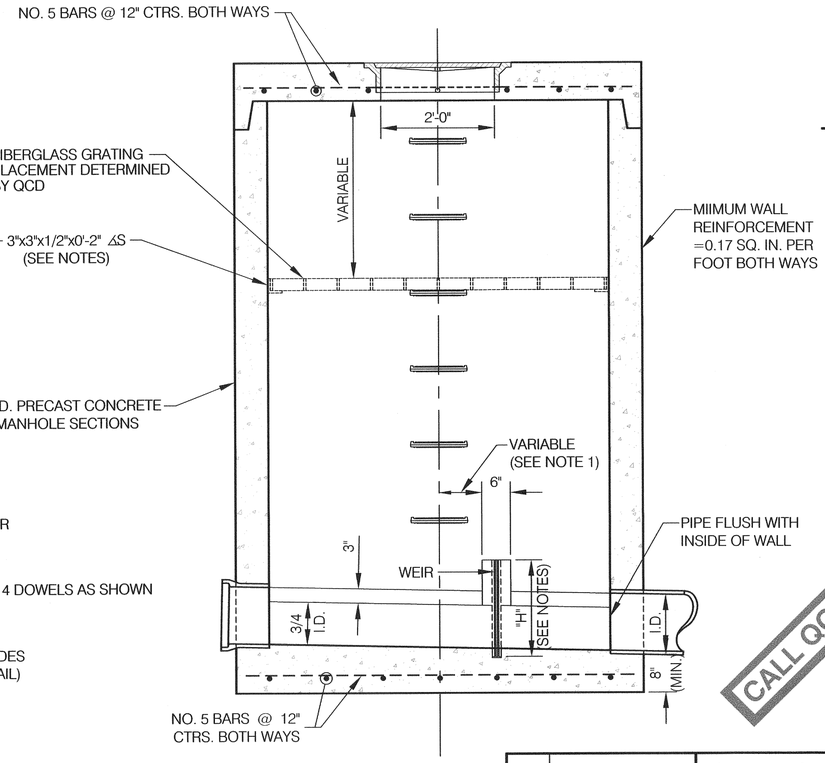

SECTION B-B

CALL QCD BEFORE PROCEDING

NOTES: [1]

1. QUALITY CONTROL DIVISION (QCD) MUST VERIFY THE DIMENSIONS AND TOLERANCES OF THE GUIDES AND WEIR PLATE BEFORE INSTALLATION.
2. INDUSTRY SHALL PROVIDE ANTICIPATED MAXIMUM AND MINIMUM FLOW RATES IN GALLONS PER MINUTE (GPM) OR CUBIC FEET PER SECOND (CFS) TO QCD FOR SIZING PURPOSES.
3. QCD MUST INSPECT FORMS BEFORE POURING CONCRETE AND AFTER TO VERIFY PROPER INSTALLATION AND TO ENSURE TOLERANCE ARE WITHIN SPECIFICATION. **CONTACT QCD: 444-3915 (EXT 135) TO ARRANGE INSPECTIONS.**
4. ALL DIMENSIONS SHALL BE PROVIDED BY QCD.
5. WEIR GUIDES AND ¼" WEIR PLATE MUST BE FABRICATED FROM 10 GAUGE TYPE 304 STAINLESS STEEL.
6. ALL DIMENSIONS OF V-NOTCH + OR - 1/64TH INCH.
7. ALL WEIR PLATE SURFACES MUST BE MILLED, LEVEL, AND PLUMB.
8. ENTIRE V-NOTCH MUST HAVE A 60 DEGREE DOWNSTREAM CHAMFERED EDGE (SEE SHEET 3).
9. V-NOTCH MUST COME TO A SHARP DEFINED POINT.
10. WEIR PLATE MUST REST IN WEIR GUIDES LEVEL AND PLUMB.
11. THE UPSTREAM APPROACH PIPE TO THE SMH MUST BE STRAIGHT (NO TIE INS, BENDS OR TURNS). THE MINIMUM LENGTH OF THE APPROACH PIPE SHALL BE EQUAL TO OR GREATER THAN 25 TIMES THE DIAMETER OF THE PIPE.
12. THE UPSTREAM AND DOWNSTREAM PIPE MUST HAVE A UNIFORM SLOPE AND BE DESIGNED SO THE APPROACHING FLOW IS RELATIVELY FREE OF TURBULENCE. PROVIDE QCD WITH % SLOPE FOR APPROVAL.ALL CONCRETE SHALL BE HIGH ALKALINITY, MINIMUM 50% CALCAREOUS AGGREGATE, CLASS L65M, TYPE II CEMENT.
13. THE MINIMUM INSIDE DEPTH OF SAMPLING MANHOLES SHALL BE 4'.
14. HINGED TOP LID SHALL BE CONSTRUCTED WHEN THE SAMPLING MANHOLE IS LOCATED OUTSIDE PAVEMENT AREA. ALTERNATE TOP SHALL BE CONSTRUCTED WHEN SAMPLING MANHOLE IS LOCATED WITHIN PAVEMENT (SEE SHEET 2).
15. THE CONCRETE TOP MAY BE PRECAST OR CAST IN PLACE.
16. STAINLESS STEEL SUPPORT ANGLES FOR GRATING SHALL BE FASTENED TO THE WALLS WITH STAINLESS STEEL CONCRETE ANCHORS.
17. GRATING PLACEMENT TO SMH SHALL BE DETERMINED BY QCD.
18. GRATING AND APPURTENANCES SHALL BE DESIGNED TO CARRY A UNIFORM LIVE LOAD OF 250PSF AND A 500 LB CONCENTRATED LOAD AT THE MIDPOINT.
19. A LAYER OF ALUMILASTIC CONSISTENCY C, C-I, OR K, OR APPROVED EQUAL, SHALL BE PLACED BETWEEN ALUMINUM COMPONENTS AND ALL CONCRETED CONTACT POINTS.
20. PRECAST CONCRETE MANHOLE SHALL BE CONSTRUCTED IN ACCORDANCE WITH THIS STANDARD PLATE AND SANITARY MANHOLE REQUIREMENTS IN SECTION 700 OF THE MOST CURRENT VERSION OF 'THE CITY OF OMAHA STANDARD SPECIFICATIONS FOR PUBLIC WORKS CONSTRUCTION'. JOINTS SHALL BE CONFINED O-RING GASKET CONFORMING TO THE REQUIREMENTS OF ASTM C361.
21. 72" I.D. MANHOLE SHALL BE MANUFACTURED ACCORDING TO A.S.T.M. STANDARD SPECIFICATION C478-72 EXCEPT AS NOTED. USE 7" WALL THICKNESS.
22. SAMPLING MANHOLES SHALL BE LOCATED SO ACCESS IS AVAILABLE TO SAMPLING CREWS AT ALL TIMES.
23. MANHOLES ON PRIVATE PROPERTY SHALL BE LOCATED SO THEY ARE UNOBSTRUCTED BY PARKED OR MOVING VEHICLES.
24. IF THE FINAL QCD INSPECTION DETERMINES THE METERING DEVICE/PIPING DOES NOT MEET TOLERANCES OR SPECIFICATIONS THE INSTALLATION WILL BE REJECTED.

			CITY OF OMAHA PUBLIC WORKS DEPARTMENT
1	REVISION 2/11/2011	DESIGN ENGINEER / CITY ENGINEER	**SAMPLING MANHOLE WEIR TYPE**
			STANDARD PLATE **3-18** SHEET 1/3
			ISSUE DATE: ... JUNE 27, 2003

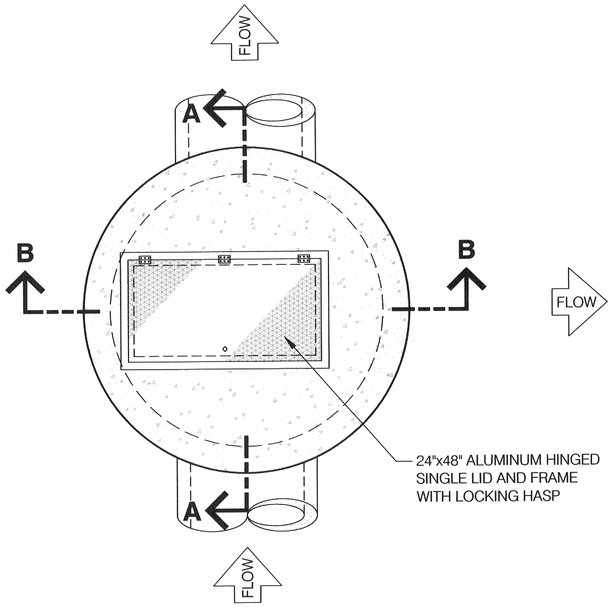

MANHOLE PLAN ..... OUTSIDE PAVEMENT

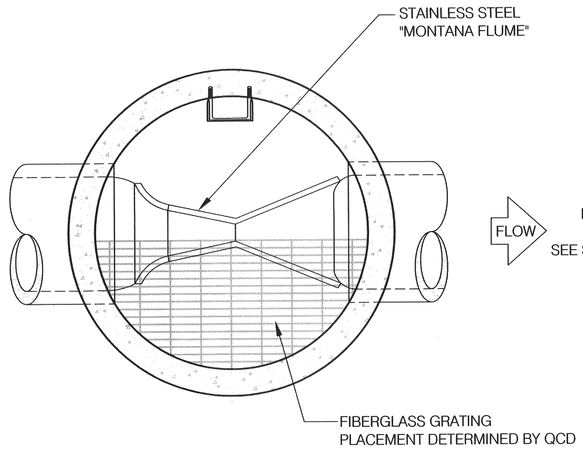

INTERIOR PLAN

NOTE

HINGED LID TOP SHALL BE CONSTRUCTED WHEN MANHOLE IS LOCATED OUTSIDE PAVEMENT AREA.

ALTERNATE TOP SHALL BE CONSTRUCTED WHEN MANHOLE IS LOCATED WITHIN PAVEMENT.

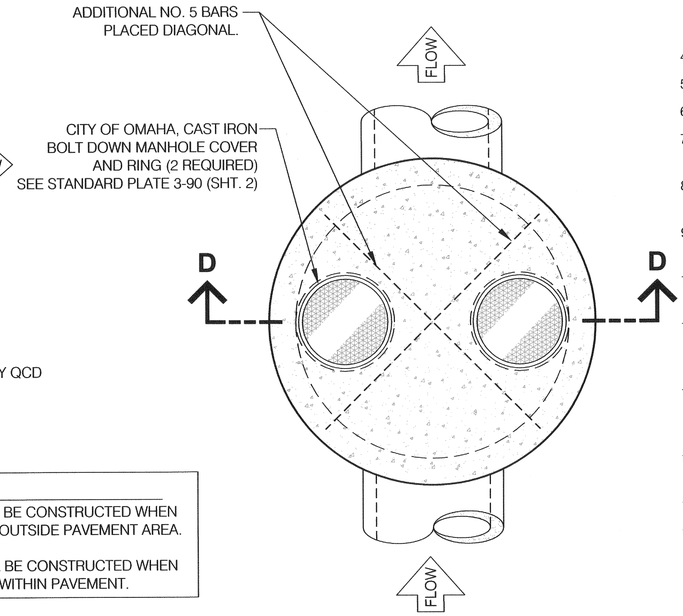

ALTERNATE TOP
MANHOLE LOCATED WITHIN PAVEMENT

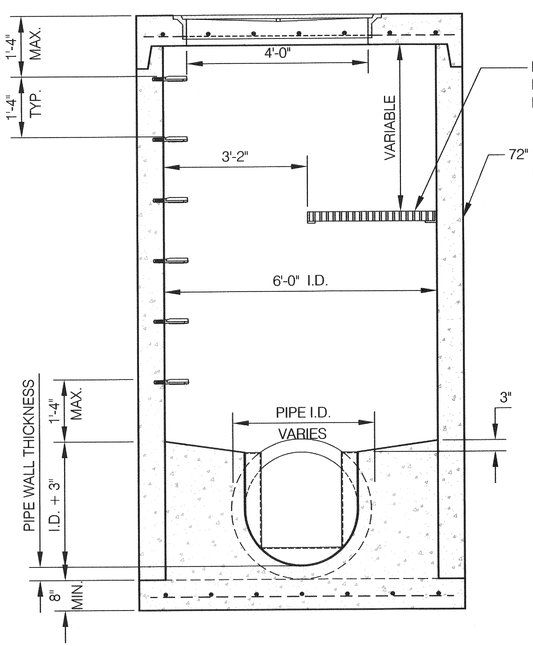

SECTION B-B

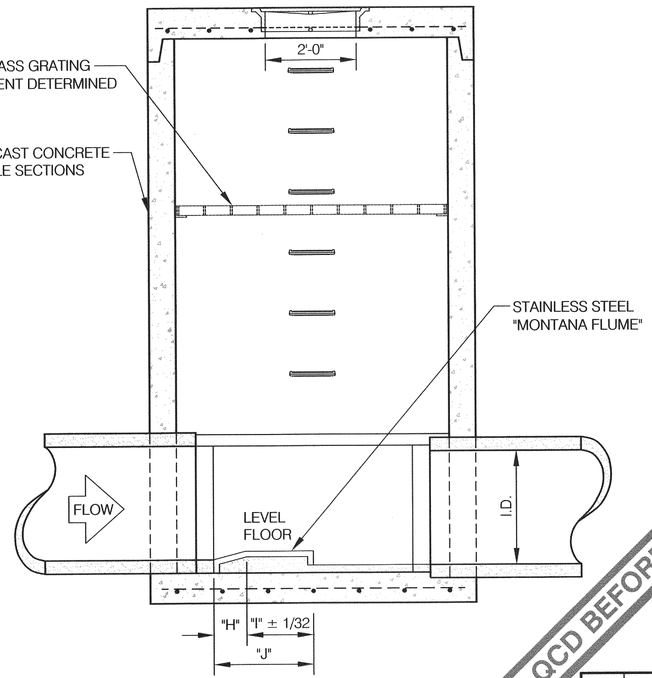

SECTION A-A [1]

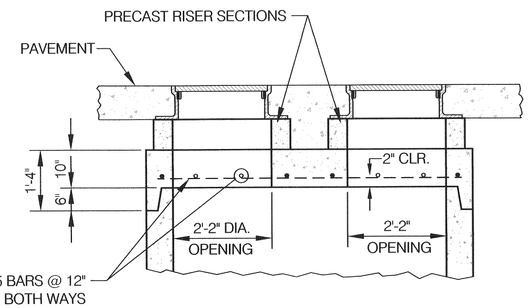

SECTION D-D

CALL QCD BEFORE PROCEDING

NOTES: [1]

1. QUALITY CONTROL DIVISION (QCD) MUST VERIFY THE DIMENSIONS AND TOLERANCES OF THE FLUME BEFORE INSTALLATION.
2. INDUSTRY SHALL PROVIDE ANTICIPATED MAXIMUM AND MINIMUM FLOW RATES IN GALLONS PER MINUTE (GPM) OR CUBIC FEET PER SECOND (CFS) TO QCD FOR SIZING PURPOSES.
3. QCD MUST INSPECT FORMS BEFORE POURING CONCRETE AND AFTER TO VERIFY PROPER INSTALLATION AND TO ENSURE TOLERANCE ARE WITHIN SPECIFICATION. CONTACT QCD: 444-3915 (EXT 135) TO ARRANGE INSPECTIONS.
4. ALL DIMENSIONS SHALL BE PROVIDED BY QCD.
5. FLUME SHALL BE FABRICATED FROM 10 GAUGE TYPE 304 STAINLESS STEEL.
6. FLUME MUST BE INSTALLED LEVEL AND PLUMB.
7. DISCHARGE OF FLUME MUST HAVE A FREE FALL OF _____ INCHES (SUPPLIED BY QCD) DEPENDENT ON FLUME SIZE.
8. APPROACH SECTION OF FLUME MAY BE FABRICATED OF STAINLESS STEEL OR FORMED IN CONCRETE.
9. TOLERANCES ON THROAT WIDTH (W) +/- 1/64TH OF AN INCH. ALL OTHER DIMENSIONS OF FLUME +/- 1/32ND OF AN INCH.
10. 2/3(A) MUST BE ETCHED INTO THE FLANGE OF THE FLUME AT THE EXACT DISTANCE. (SEE SHEET 3)
11. THE UPSTREAM APPROACH PIPE TO THE SMH MUST BE STRAIGHT (NO TIE INS, BENDS OR TURNS). THE MINIMUM LENGTH OF THE APPROACH PIPE SHALL BE EQUAL TO OR GREATER THAN 25 TIMES THE DIAMETER OF THE PIPE.
12. THE UPSTREAM AND DOWNSTREAM PIPE MUST HAVE A UNIFORM SLOPE AND BE DESIGNED SO THE APPROACHING FLOW IS RELATIVELY FREE OF TURBULENCE. PROVIDE QCD WITH % SLOPE FOR APPROVAL.
13. ALL CONCRETE SHALL BE HIGH ALKALINITY, MINIMUM 50% ALCAREOUS AGGREGATE, CLASS L65M, TYPE II CEMENT.
14. THE MINIMUM INSIDE DEPTH OF SAMPLING MANHOLES SHALL BE 4 FEET.
15. HINGED TOP LID SHALL BE CONSTRUCTED WHEN THE SAMPLING MANHOLE IS LOCATED OUTSIDE PAVEMENT AREA. ALTERNATE TOP SHALL BE CONSTRUCTED WHEN SAMPLING MANHOLE IS LOCATED WITHIN PAVEMENT (SEE SHEET 2).
16. CONCRETE TOP MAY BE PRECAST OR CAST IN PLACE.
17. STAINLESS STEEL SUPPORT ANGLES FOR GRATING SHALL BE FASTENED TO THE WALLS WITH STAINLESS STEEL CONCRETE ANCHORS.
18. GRATING PLACEMENT TO SMH SHALL BE DETERMINED BY QCD.
19. GRATING AND APPURTENANCES SHALL BE DESIGNED TO CARRY A UNIFORM LIVE LOAD OF 250PSF AND A 500 LB CONCENTRATED LOAD AT THE MIDPOINT.
20. A LAYER OF ALUMILASTIC CONSISTENCY C, C-I, OR K, OR APPROVED EQUAL, SHALL BE PLACED BETWEEN ALUMINUM COMPONENTS AND ALL CONCRETED CONTACT POINTS.
21. PRECAST CONCRETE MANHOLE SHALL BE CONSTRUCTED IN ACCORDANCE WITH THIS STANDARD PLATE AND SANITARY MANHOLE REQUIREMENTS IN SECTION 700 OF THE MOST CURRENT VERSION OF 'THE CITY OF OMAHA STANDARD SPECIFICATIONS FOR PUBLIC WORKS CONSTRUCTION'. JOINTS SHALL BE CONFINED O-RING GASKET CONFORMING TO THE REQUIREMENTS OF ASTM C361.
22. 72" I.D. MANHOLE SHALL BE MANUFACTURED ACCORDING TO A.S.T.M. STANDARD SPECIFICATION C478-72 EXCEPT AS NOTED. USE 7" WALL THICKNESS.
23. SAMPLING MANHOLES SHALL BE LOCATED SO ACCESS IS AVAILABLE TO SAMPLING CREWS AT ALL TIMES.
24. MANHOLES ON PRIVATE PROPERTY SHALL BE LOCATED SO THEY ARE UNOBSTRUCTED BY PARKED OR MOVING VEHICLES.
25. IF THE FINAL QCD INSPECTION DETERMINES THE METERING DEVICE/PIPING DOES NOT MEET TOLERANCES OR SPECIFICATIONS THE INSTALLATION WILL BE REJECTED.

		DESIGN ENGINEER	CITY OF OMAHA PUBLIC WORKS DEPARTMENT
1	REVISION 02/11/2011	CITY ENGINEER	**SAMPLING MANHOLE MONTANA FLUME TYPE**
			STANDARD PLATE **3-18** SHEET 2/3
			ISSUE DATE: ..... MARCH 26, 2003

MONTANA FLUME
INTERIOR PLAN

NOTES: MONTANA FLUME DIMENSIONS, TOLERANCES, & REQUIREMENTS

1. QUALITY CONTROL DIVISION (QCD) MUST VERIFY THE DIMENSIONS AND TOLERANCES OF THE FLUME BEFORE INSTALLATION.
2. INDUSTRY SHALL PROVIDE ANTICIPATED MAXIMUM AND MINIMUM FLOW RATES IN GALLONS PER MINUTE (GPM) OR CUBIC FEET PER SECOND (CFS) TO QCD FOR SIZING PURPOSES.
3. QCD MUST INSPECT FORMS BEFORE POURING CONCRETE AND AFTER TO VERIFY PROPER INSTALLATION AND TO ENSURE TOLERANCE ARE WITHIN SPECIFICATION. CONTACT QCD: 444-3915 (EXT 135) TO ARRANGE INSPECTIONS.
4. ALL DIMENSIONS SHALL BE PROVIDED BY QCD.
5. FLUME SHALL BE FABRICATED FROM 10 GAUGE TYPE 304 STAINLESS STEEL.
6. FLUME MUST BE INSTALLED LEVEL AND PLUMB.
7. DISCHARGE OF FLUME MUST HAVE A FREE FALL OF _____ INCHES (SUPPLIED BY QCD) DEPENDENT ON FLUME SIZE.
8. APPROACH SECTION OF FLUME MAY BE FABRICATED OF STAINLESS STEEL OR FORMED IN CONCRETE.
9. TOLERANCES ON THROAT WIDTH (W) +/- 1/64TH OF AN INCH. ALL OTHER DIMENSIONS OF FLUME +/- 1/32ND OF AN INCH.
10. 2/3(A) MUST BE ETCHED INTO THE FLANGE OF THE FLUME AT THE EXACT DISTANCE.
11. THE UPSTREAM APPROACH PIPE TO THE SMH MUST BE STRAIGHT (NO TIE INS, BENDS OR TURNS). THE MINIMUM LENGTH OF THE APPROACH PIPE SHALL BE EQUAL TO OR GREATER THAN 25 TIMES THE DIAMETER OF THE PIPE.
12. THE UPSTREAM AND DOWNSTREAM PIPE MUST HAVE A UNIFORM SLOPE AND BE DESIGNED SO THE APPROACHING FLOW IS RELATIVELY FREE OF TURBULENCE. PROVIDE QCD WITH % SLOPE FOR APPROVAL.
13. ALL CONCRETE SHALL BE HIGH ALKALINITY, MINIMUM 50% CALCAREOUS AGGREGATE, CLASS L65M, TYPE II CEMENT.
14. IF THE FINAL QCD INSPECTION DETERMINES THE METERING DEVICE/PIPING DOES NOT MEET TOLERANCES OR SPECIFICATIONS THE INSTALLATION WILL BE REJECTED.

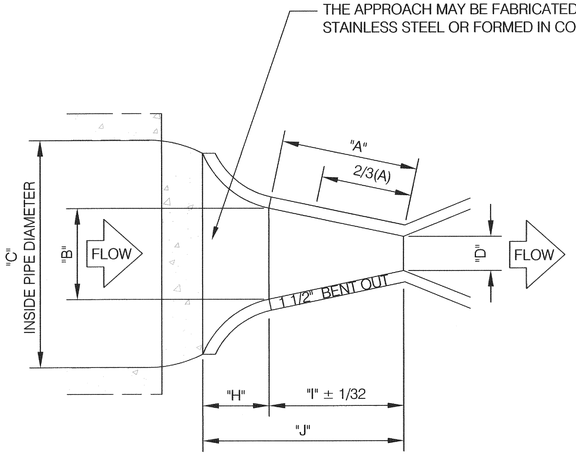

PLAN VIEW

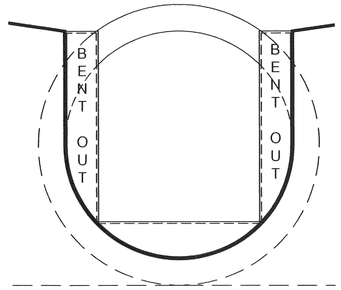

FRONT VIEW

CALL QCD BEFORE PROCEDING

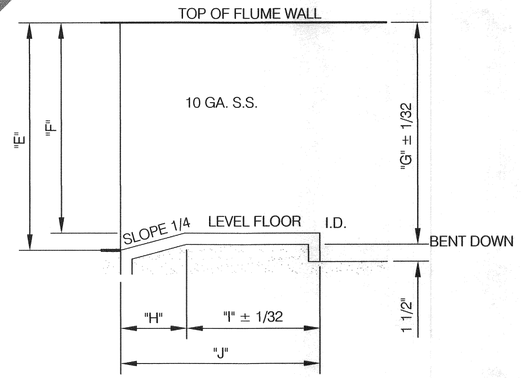

SIDE VIEW

V-NOTCH WEIR
INTERIOR PLAN

NOTES: STANDARD V-NOTCH WEIR DIMENSIONS, TOLERANCES, & REQUIREMENTS

1. QUALITY CONTROL DIVISION (QCD) MUST VERIFY THE DIMENSIONS AND TOLERANCES OF THE GUIDES AND WEIR PLATE BEFORE INSTALLATION.
2. INDUSTRY SHALL PROVIDE ANTICIPATED MAXIMUM AND MINIMUM FLOW RATES IN GALLONS PER MINUTE (GPM) OR CUBIC FEET PER SECOND (CFS) TO QCD FOR SIZING PURPOSES.
3. QCD MUST INSPECT FORMS BEFORE POURING CONRETE AND AFTER TO VERIFY PROPER INSTALLATION AND TO ENSURE TOLERANCE ARE WITHIN SPECIFICATION. CONTACT QCD: 444-3915 (EXT 135) TO ARRANGE INSPECTIONS.
4. ALL DIMENSIONS SHALL BE PROVIDED BY QCD.
5. WEIR GUIDES AND ¼" WEIR PLATE MUST BE FABRICATED FROM 10 GAUGE TYPE 304 STAINLESS STEEL.
6. ALL DIMENSIONS OF V-NOTCH + OR - 1/64TH INCH.
7. ALL WEIR PLATE SURFACES MUST BE MILLED, LEVEL, AND PLUMB.
8. ENTIRE V-NOTCH MUST HAVE A 60 DEGREE DOWNSTREAM CHAMFERED EDGE.
9. V-NOTCH MUST COME TO A SHARP DEFINED POINT.
10. WEIR PLATE MUST REST IN WEIR GUIDES LEVEL AND PLUMB.
11. THE UPSTREAM APPROACH PIPE TO THE SMH MUST BE STRAIGHT (NO TIE INS, BENDS OR TURNS). THE MINIMUM LENGTH OF THE APPROACH PIPE SHALL BE EQUAL TO OR GREATER THAN 25 TIMES THE DIAMETER OF THE PIPE.
12. THE UPSTREAM AND DOWNSTREAM PIPE MUST HAVE A UNIFORM SLOPE AND BE DESIGNED SO THE APPROACHING FLOW IS RELATIVELY FREE OF TURBULENCE. PROVIDE QCD WITH % SLOPE FOR APPROVAL.ALL CONCRETE SHALL BE HIGH ALKALINITY, MINIMUM 50% CALCAREOUS AGGREGATE, CLASS L65M, TYPE II CEMENT.
13. IF THE FINAL QCD INSPECTION DETERMINES THE METERING DEVICE/PIPING DOES NOT MEET TOLERANCES OR SPECIFICATIONS THE INSTALLATION WILL BE REJECTED.

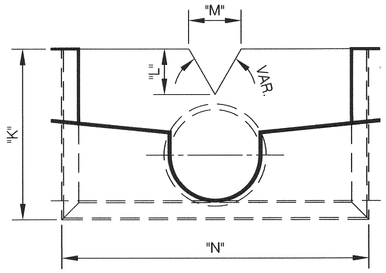

FRONT VIEW

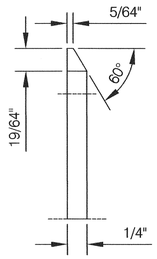

SIDE PLATE VIEW

CALL QCD BEFORE PROCEDING

		DESIGN ENGINEER	CITY OF OMAHA — PUBLIC WORKS DEPARTMENT	
			SAMPLING MANHOLE MONTANA FLUME & WEIR TYPE DETAILS	STANDARD PLATE 3-18 — SHEET 3/3
1	REVISION 02/11/2011	CITY ENGINEER		ISSUE DATE: ..... MARCH 26, 2003

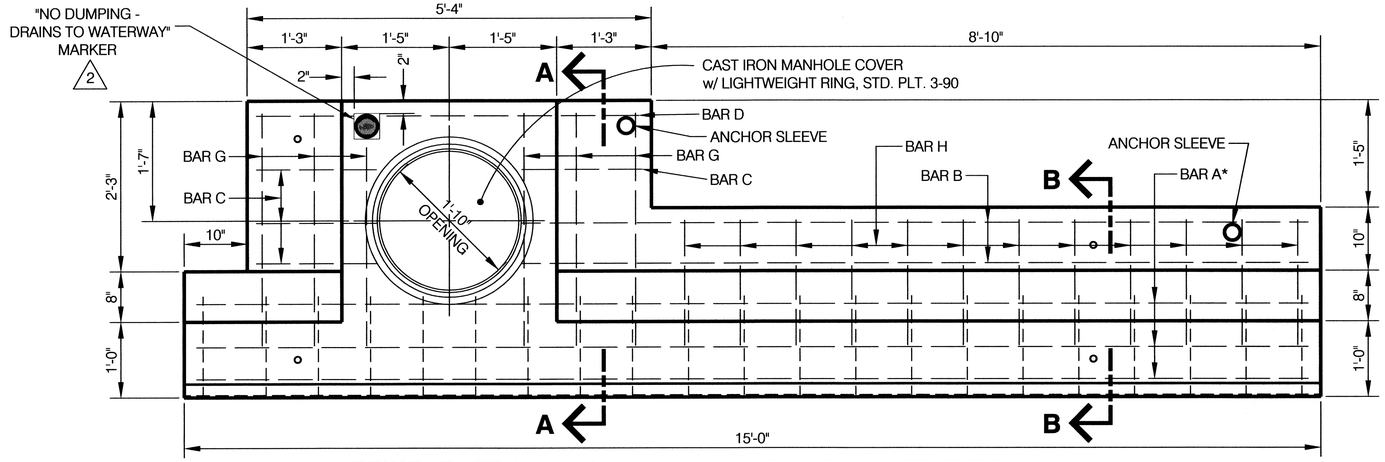

REINFORCED CONCRETE COVER FOR CURB INLET, TYPE I, II, & III

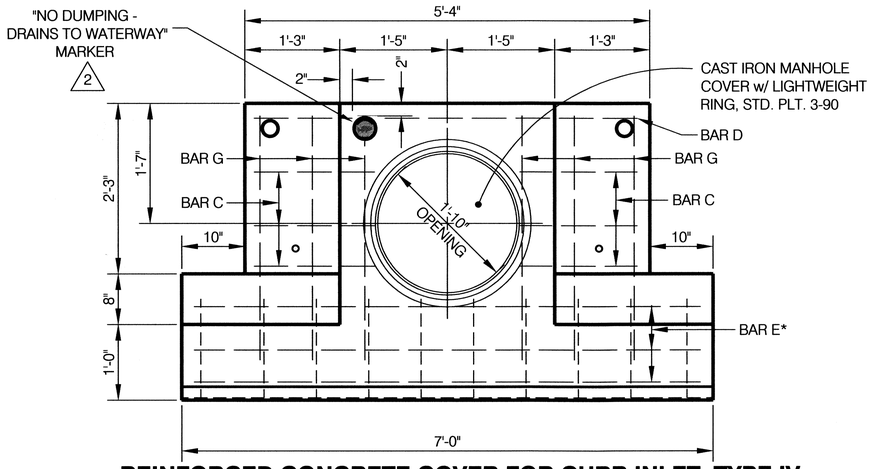

REINFORCED CONCRETE COVER FOR CURB INLET, TYPE IV

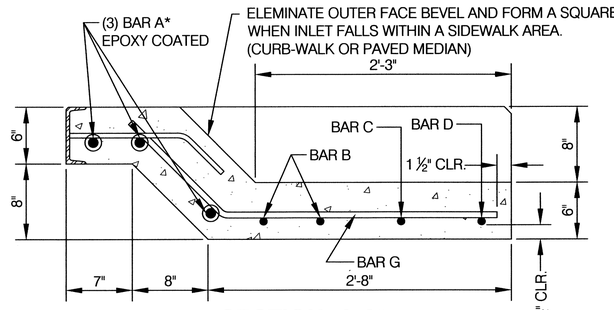

SECTION "A-A"

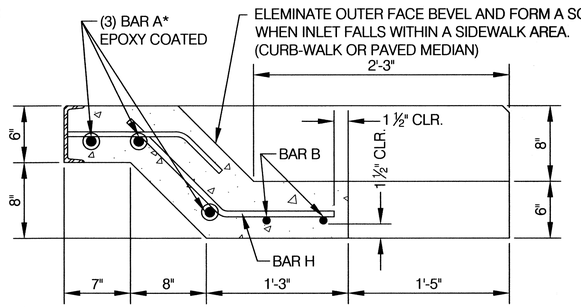

SECTION "B-B"

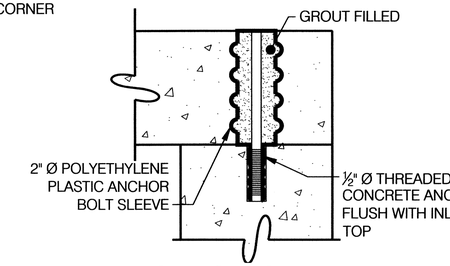

ANCHOR BOLT SLEEVE DETAIL

REINFORCING BAR SCHEDULE

BAR	SIZE	SHAPE	LENGTH	QUANTITY I, II, III	QUANTITY IV
*A	8	STR.	14'-9"	3	
B	6	STR.	10'-4"	2	
C	6	STR.	1'-6"	4	6
D	6	STR.	5'-1"	1	1
*E	8	STR.	6'-9"		3
G	5	BENT	3'-6"	6	6
H	5	BENT	2'-1"	12	

*NOTE: A & E BARS ARE EPOXY COATED

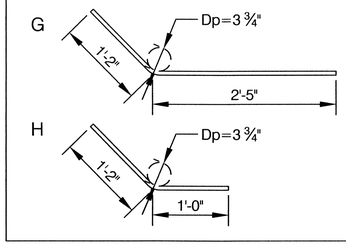

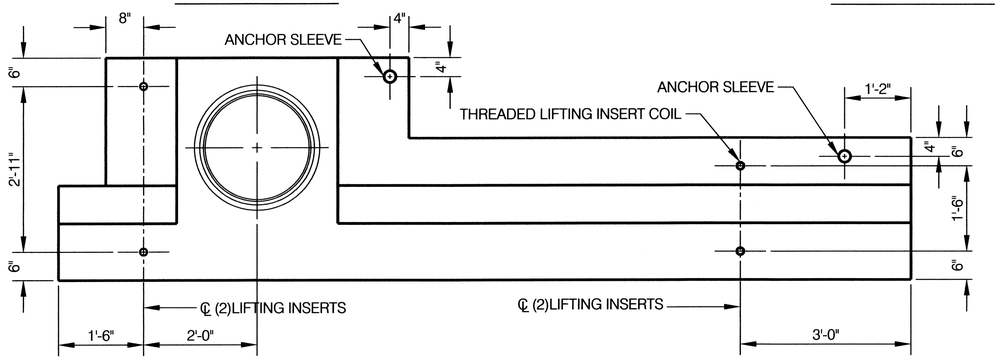

LIFT POINT-ANCHOR SLEEVE LOCATIONS

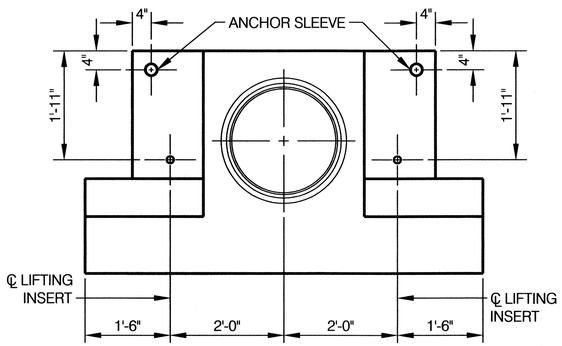

LIFT POINT-ANCHOR SLEEVE LOCATIONS

NOTES

1. THREADED LIFTING INSERT COILS SHALL BE FLARED THIN SLAB TYPE F-63, ¾" Ø x 3 ½" LONG AS MANUFACTURED BY DAYTON SUPERIOR OR AN APPROVED EQUAL.
2. CONCRETE FOR COVER SHALL BE L65 WITH f 'c=4000 PSI; AIR ENTRAINMENT = 6% ± 1%; W/C RATIO = 0.44 MAX.
3. THE COMPLETED FACE ARMOR/ANCHOR BAR ASSEMBLY SHALL BE HOT-DIP GALVANIZED IN ACCORDANCE WITH ASTM A153.
4. ALL REINFORCING STEEL SHALL BE DEFORMED BARS GRADE 60. THE MINIMUM COVERING, MEASURED FROM THE FACE OF THE CONCRETE TO THE SURFACE OF ANY REINFORCING BAR SHALL BE 1 ½ INCHES.
5. EXPOSED EDGES OF COVER SHALL BE CHAMFERED.
6. (1) CONTRACTOR/MANUFACTURER CERTIFIES THAT THE CURB INLET TOPS INSTALLED ON THIS PROJECT HAVE BEEN CONSTRUCTED IN ACCORDANCE WITH THE LATEST VERSION OF CITY OF OMAHA STANDARD PLATES 721-1, 721-2, 721-3, 721-4 AND 3-30. CONTRACTOR/MANUFACTURER FURTHER WARRANTS THE INLET TOPS FROM FAILURE DUE TO IMPROPER CONSTRUCTION OR MATERIALS FOR A PERIOD OF 5-YEARS FROM THE DATE OF INSTALLATION. ALL INLET TOPS SHALL BE STAMPED WITH THE NAME OF THE MANUFACTURER AND DATE OF MANUFACTURE. THE STAMP SHALL BE IN THE FORM OF A READABLE IMPRESSION LOCATED ON THE TOP OF THE INLET, CENTERED BETWEEN THE FRONT OF THE INLET AND THE MANHOLE RING.
7. (2) CONTRACTOR MUST OBTAIN THE "NO DUMPING-DRAINS TO WATERWAY MARKER" FROM: KEEP OMAHA BEAUTIFUL, OMAHA DOUGLAS CIVIC CENTER, 1819 FARNAM ST, SUITE 306, OMAHA, NE 68183, PHONE:444-7774

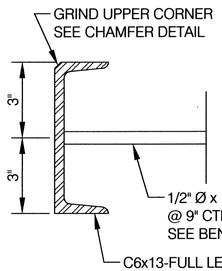

FACE ARMOR DETAIL

SEE NOTE 3

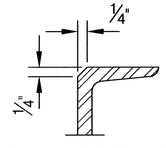

CHAMFER DETAIL

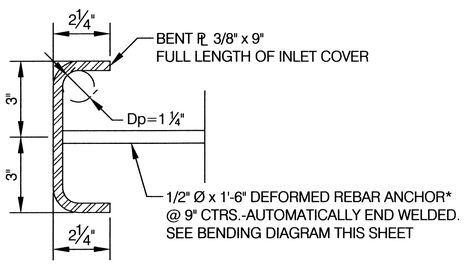

FACE ARMOR DETAIL- ALTERNATE

SEE NOTE 3

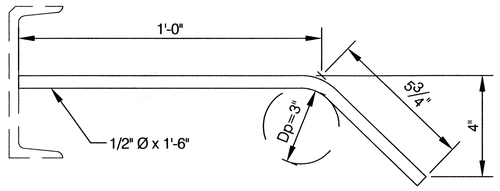

DEFORMED REBAR ANCHOR

1	REVISION 02/01/2008	DESIGN ENGINEER
2	REVISION 3/12/2009	CITY ENGINEER

CITY OF OMAHA PUBLIC WORKS DEPARTMENT

TYPE FA
REINFORCED CONCRETE CURB INLET COVER WITH FACE ARMOR

STANDARD PLATE 3-30

SHEET 1/1

ISSUE DATE: ..... APRIL 21, 2004

FLARED END SECTIONS

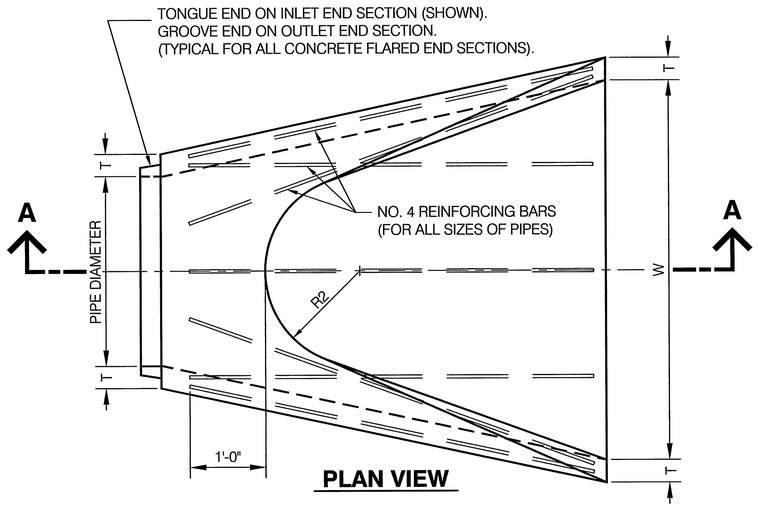

PLAN VIEW

FLARED END SECTIONS (NOMINAL DIMENSIONS)									
PIPE DIAMETER	L ± 6"	Y	X ± 4 1/2"	Z	W ± 2"	R1	R2	S APPROX.	T MIN.
12"	6'-0 7/8"	2'-0"	4'-0 7/8"	4"	2'-0"	1'-0 1/8"	9"	3	2"
15"	6'-1"	2'-3"	3'-10"	6"	2'-6"	1'-0 1/2"	11"	3	2 1/4"
18"	6'-1"	2'-3"	3'-10"	9"	3'-0"	1'-3 1/2"	1'-0"	3	2 1/2"
24"	6'-1 1/2"	3'-7 1/2"	2'-6"	9 1/2"	4'-0"	1'-4 13/16"	1'-2"	3	3"
30"	6'-1 3/4"	4'-6"	1'-7 3/4"	1'-0"	5'-0"	1'-6 1/2"	1'-3"	3	3 1/2"
36"	8'-1 3/4"	5'-3"	2'-10 3/4"	1'-3"	6'-0"	2'-0 5/16"	1'-8"	3	4"
42"	8'-2"	5'-3"	2'-11"	1'-9"	6'-6"	2'-3 1/2"	1'-10"	3	4 1/2"
48"	8'-2"	6'-0"	2'-2"	2'-0"	7'-0"	2'-4 1/2"	1'-10"	3	5"
54"	8'-4"	5'-5"	2'-11"	2'-3"	7'-6"	2'-9 1/8"	2'-0"	2.4	5 1/2"
60"	8'-3"	5'-0"	3'-3"	2'-6"	8'-0"	3'-0 11/16"	2'-0"	2	6"
66"	8'-3"	6'-6"	1'-9"	2'-6"	9'-0"	3'-0 1/8"	2'-0"	2	6 1/2"
72"	8'-3"	6'-6"	1'-9"	2'-6"	9'-0"	3'-2 15/16"	2'-0"	2	7"

BAR GRATES

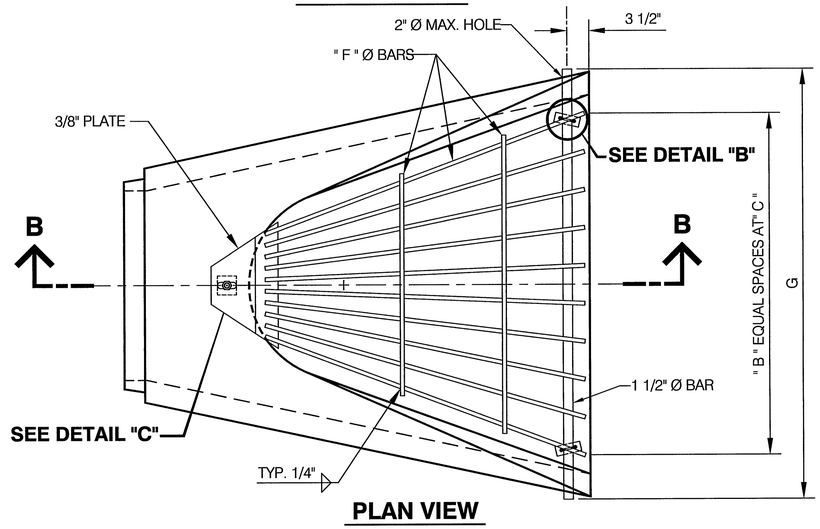

PLAN VIEW

BAR GRATE DATA (NOMINAL DIMENSIONS)								
PIPE DIAMETER	A	B	C	D	E	"F" BARS	G	H
15"	5"	4	2'-0"	6"	-	5/8" Ø	2'-11"	1'-4"
18"	8"	5	2'-6"	6"	-	5/8" Ø	3'-6"	1'-4"
24"	8 1/2"	7	3'-6"	9"	-	5/8" Ø	4'-7"	1'-8"
30"	11"	9	4'-6"	12"	1'-6"	5/8" Ø	5'-8"	1'-8"
36"	14"	11	5'-6"	12"	1'-6"	3/4" Ø	6'-9"	2'-0"
42"	9"	12	6'-0"	12"	1'-6"	1" Ø	7'-4"	2'-0"
48"	9"	12	6'-6"	12"	1'-6"	1" Ø	7'-11"	2'-0"

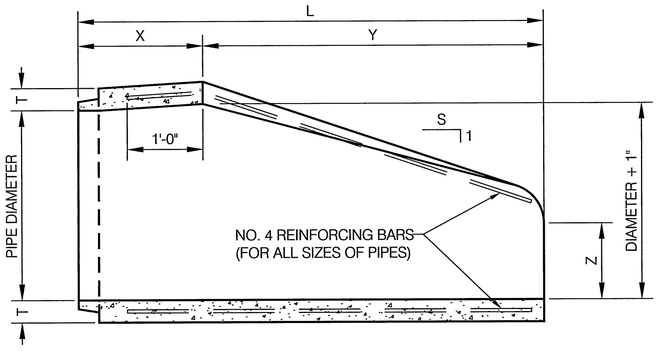

SECTION "A-A"

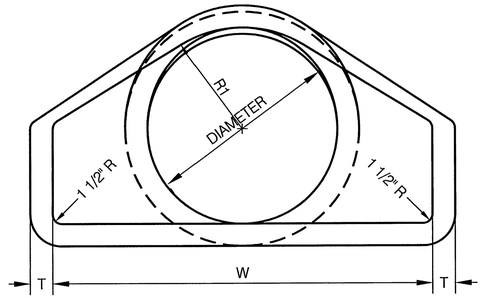

END ELEVATION

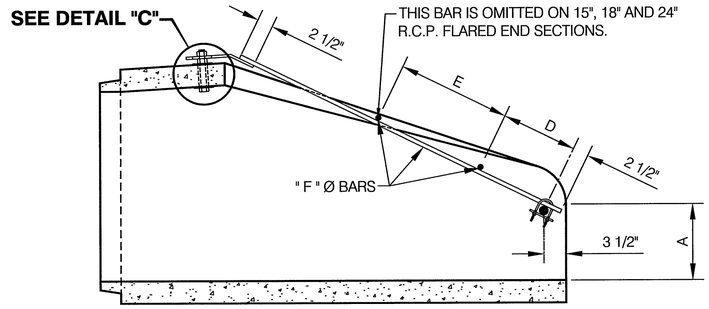

SECTION "B-B"

NOTES

1. CONCRETE FOR FLARED END SECTIONS AND REINFORCEMENT IN THE AREA DIMENSIONED AS "X" SHALL CONFORM TO THE APPLICABLE REQUIREMENTS OF A.A.S.H.T.O. DESIGNATION M170, M206, AND M207, FOR CLASS 2 PIPE.
2. IN ADDITION TO THE REINFORCING BARS SHOWN, REINFORCEMENT IN THE AREA DIMENSIONED AS "Y" SHALL HAVE A CROSS-SECTIONAL AREA EQUAL TO THAT OF ONE LAYER OF STEEL IN THE AREA DIMENSIONED AS "X".
3. BAR GRATES SHALL CONFORM TO SECTION 701 OF THE CITY OF OMAHA STANDARD SPECIFICATIONS FOR PUBLIC WORKS CONSTRUCTION.
4. ALL STEEL SHALL CONFORM TO THE REQUIREMENTS OF A.S.T.M. A575 GRADE 1020 STEEL.
5. THREE SEPARATE COATS OF PAINT SHALL BE APPLIED TO ALL UNGALVANIZED STEEL MATERIAL. THE FIRST TWO COATS SHALL BE INORGANIC ZINC RICH PRIMER AND THE THIRD COAT SHALL BE HI-BUILD VINYL GREEN BRIDGE PAINT. BOTH THE INORGANIC ZINC PRIMER AND THE VINYL TOPCOAT SHALL BE APPLIED SO EACH COAT WILL PROVIDE AN AVERAGE DRY FILM THICKNESS OF AT LEAST 3 MILS. MINIMUM DRY FILM THICKNESS MEASURED AT ANY POINT FOR EACH COAT SHALL BE 2.5 MILS. ALL PAINTING MAY BE DONE IN THE SHOP, UNLESS OTHERWISE SPECFIED. BARS AND PLATES MAY BE GALVANIZED OR PAINTED.
6. GALVANIZATION SHALL BE IN ACCORDANCE WITH A.S.T.M. A123.

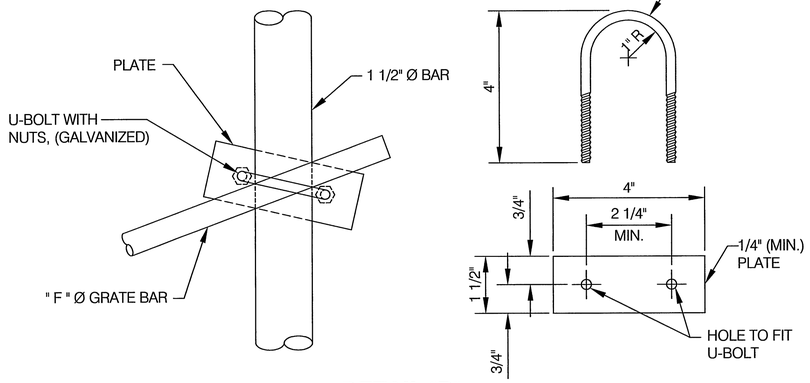

DETAIL "B"
U-BOLT ASSEMBLY

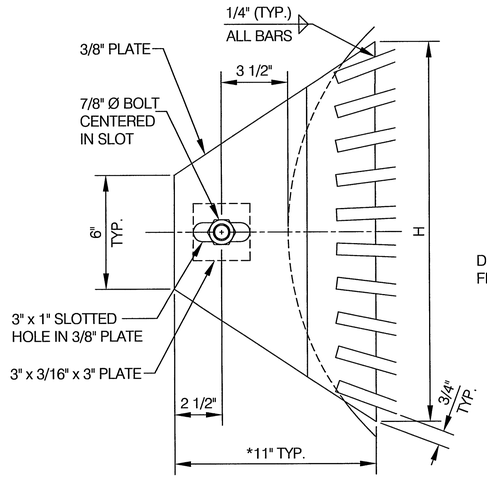

* DIMENSION OF PLATE BEFORE BENDING

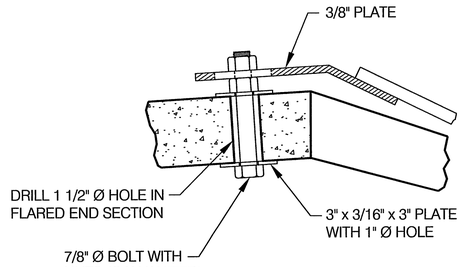

DETAIL "C"

DESIGN ENGINEER

CITY ENGINEER

CITY OF OMAHA PUBLIC WORKS DEPARTMENT

REINFORCED CONCRETE PIPE FLARED END SECTIONS AND BAR GRATES

STANDARD PLATE 3-70

SHEET 1/1

ISSUE DATE: ..... MARCH 26, 2003

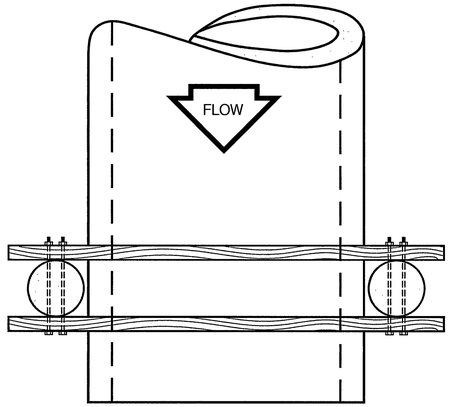

PLAN AT OUTLET

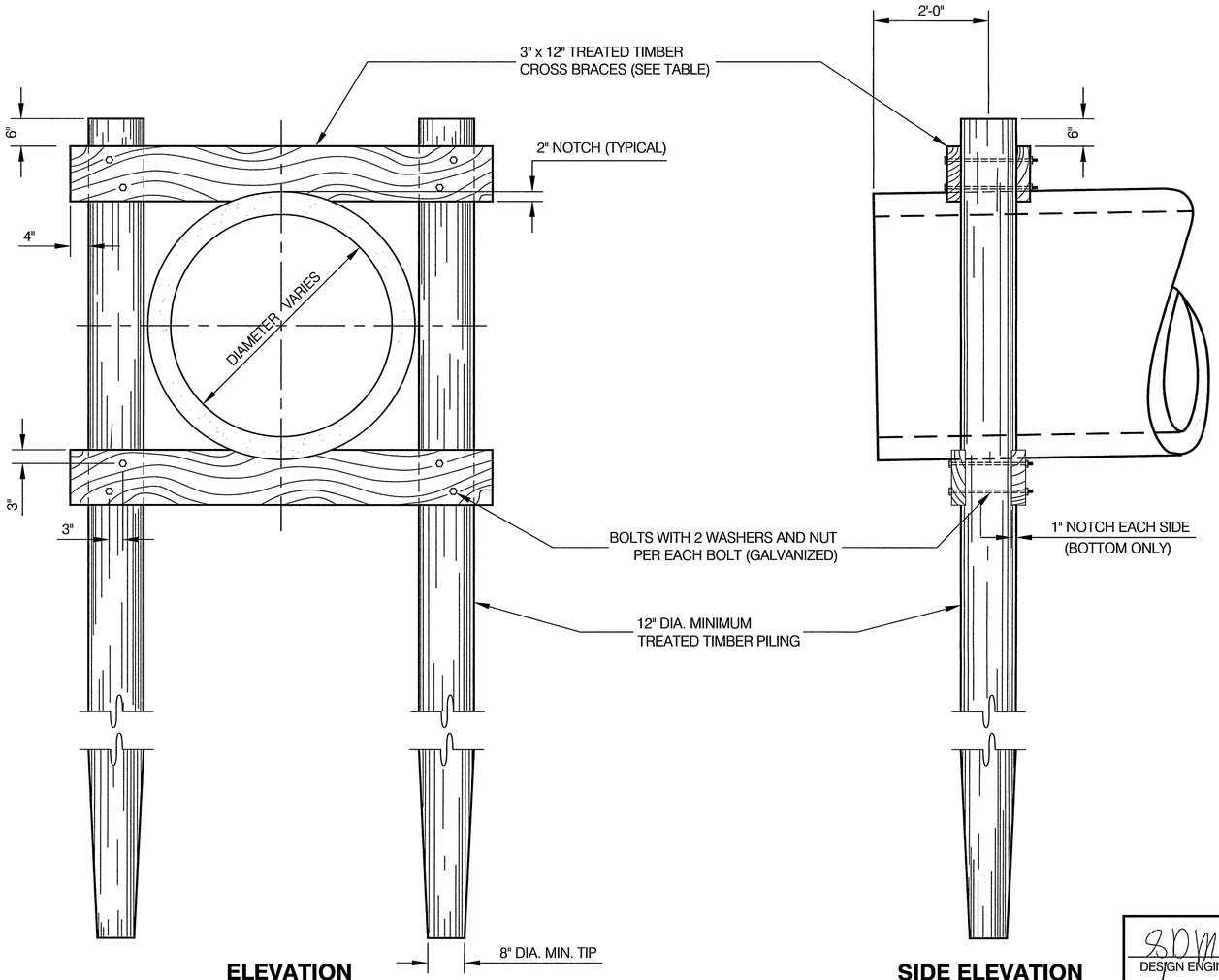

ELEVATION

SIDE ELEVATION

PIPE SIZE	PILE LENGTH	MINIMUM PILE LENGTH DRIVEN	BOTTOM CROSS BRACES	
			REQUIRED 3"x12"	BOLTS
15" - 27"	20'	15'	2	(4) 3/4" Ø
30" - 48"	25'	17.5'	2	(4) 3/4" Ø
54" - 72"	30'	20'	4	(4) 1" Ø

NOTES

1. ALL TIMBER PILING AND CROSS BRACES SHALL BE TREATED.
2. ALL BOLTS, NUTS, AND WASHERS USED SHALL BE GALVANIZED.

DESIGN ENGINEER

CITY ENGINEER

CITY OF OMAHA PUBLIC WORKS DEPARTMENT

TIMBER PILE PIPE SUPPORT

STANDARD PLATE 3-72

SHEET 1/1

ISSUE DATE: ..... MARCH 26, 2003

STILLING BASIN DIMENSION DATA

PIPE SIZE		MAX. DIS-CHARGE C.F.S.	FEET AND INCHES										INCHES				
DIA. IN.	AREA (SQ. FT.)		W	H	L	a	b	c	d	e	f	g	t_w	t_f	t_b	t_p	k
18	1.77	21	5-6	4-3	7-4	3-3	4-1	2-4	0-11	0-6	1-6	2-1	6	6 1/2	6	6	3
24	3.14	38	6-9	5-3	9-0	3-11	5-1	2-10	1-2	0-6	2-0	2-6	6	6 1/2	6	6	3
30	4.91	59	8-0	6-3	10-8	4-7	6-1	3-4	1-4	0-8	2-6	3-0	6	6 1/2	7	7	3
36	7.07	85	9-3	7-3	12-4	5-3	7-1	3-10	1-7	0-8	3-0	3-6	7	7 1/2	8	8	3
42	9.62	115	10-6	8-0	14-0	6-0	8-0	4-5	1-9	0-10	3-0	3-11	8	8 1/2	9	8	4
48	12.57	151	11-9	9-0	15-8	6-9	8-11	4-11	2-0	0-10	3-0	4-5	9	9 1/2	10	8	4
54	15.90	191	13-0	9-9	17-4	7-4	10-0	5-5	2-2	1-0	3-0	4-11	10	10 1/2	10	8	4
60	19.63	236	14-3	10-9	19-0	8-0	11-0	5-11	2-5	1-0	3-0	5-4	11	11 1/2	11	8	6
72	28.27	339	16-6	12-3	22-0	9-3	12-9	6-11	2-9	1-3	3-0	6-2	12	12 1/2	12	8	6

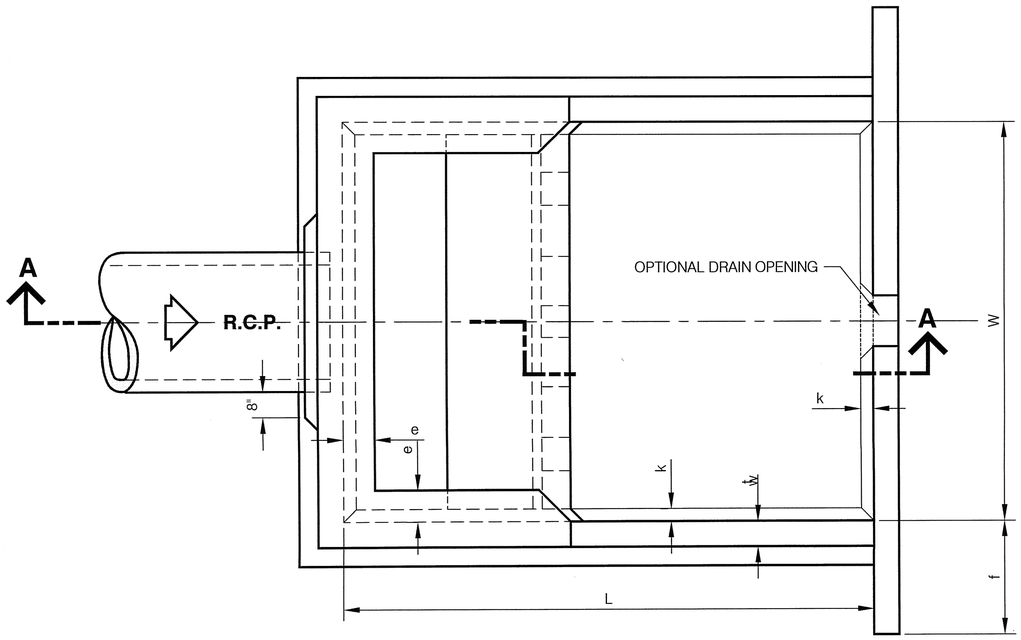

STILLING BASIN PLAN

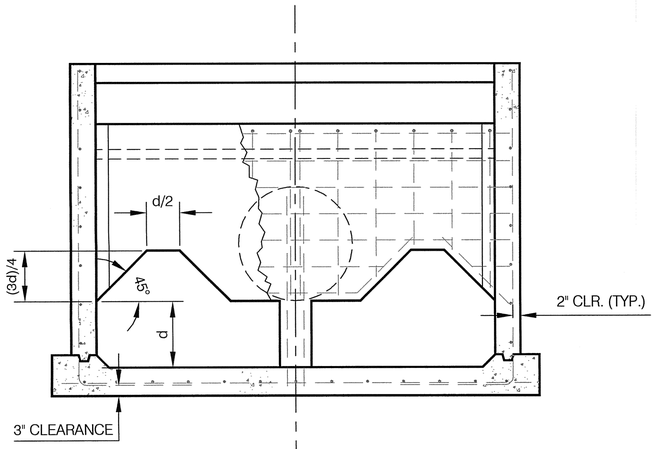

SECTION B-B

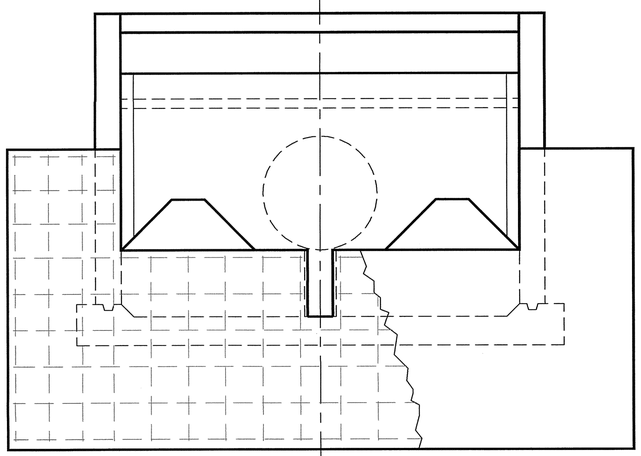

END ELEVATION

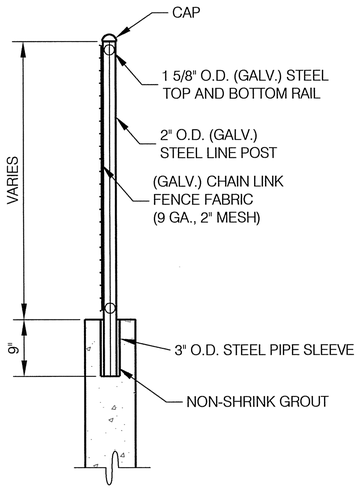

OPTIONAL FENCE DETAIL

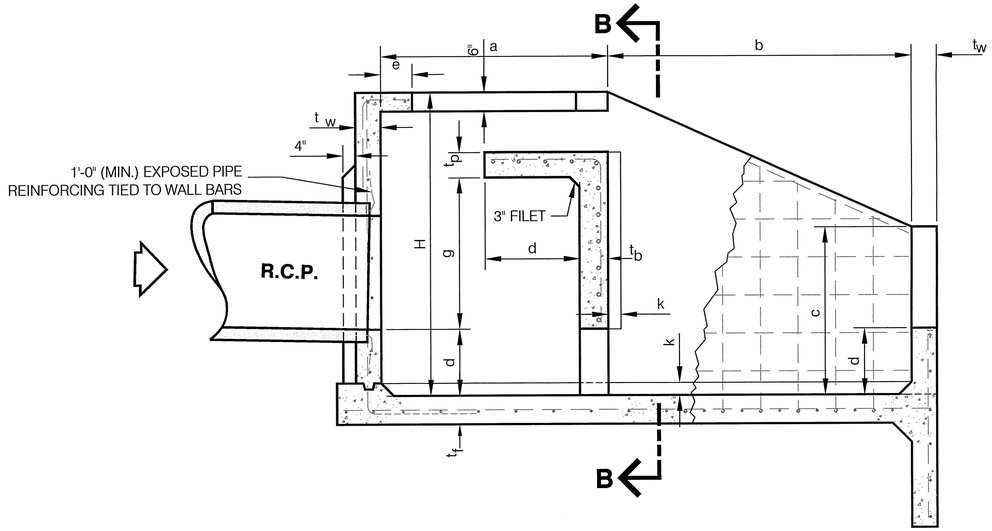

LONGITUDINAL SECTION A-A

NOTES:

1. CONCRETE FOR STRUCTURE SHALL BE CLASS L6. [1]
2. ALL EXPOSED CORNERS SHALL BE CHAMFERED 3/4".
3. ALL REINFORCING STEEL SHALL BE GRADE 60. PLACEMENT SHALL MEET THE REQUIREMENTS OF ACI 318.
4. ALL HOOKS ARE ACI STANDARD UNLESS OTHERWISE SHOWN.
5. THE MINIMUM COVERING, MEASURED FROM THE FACE OF THE CONCRETE TO THE SURFACE OF A REINFORCING BAR SHALL BE 3" FOR BARS NEAR THE UNDERSIDE OF THE STRUCTURE FLOOR, AND 2" FOR ALL OTHER BARS.

NOTE:

ALL REINFORCING STEEL SHOWN FOR ILLUSTRATION ONLY.

[1]	REVISION 02/01/2008	DESIGN ENGINEER	CITY OF OMAHA PUBLIC WORKS DEPARTMENT
		CITY ENGINEER	**IMPACT STILLING BASIN**
			STANDARD PLATE **3-75** SHEET 1/1
			ISSUE DATE: ... MARCH 26, 2003

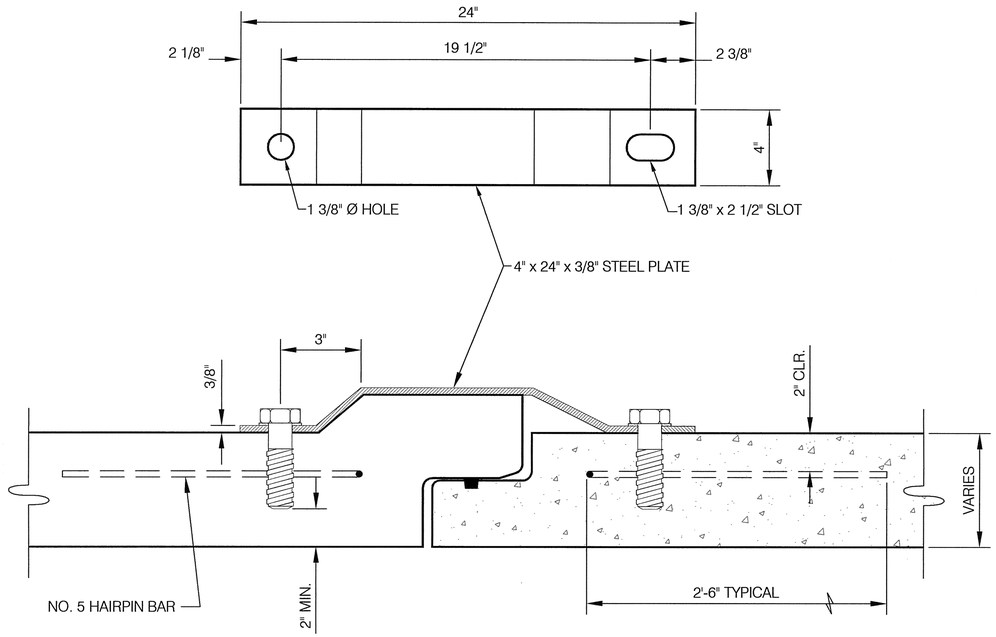

REINFORCED CONCRETE SANITARY SEWER PIPE
BELL & SPIGOT JOINT

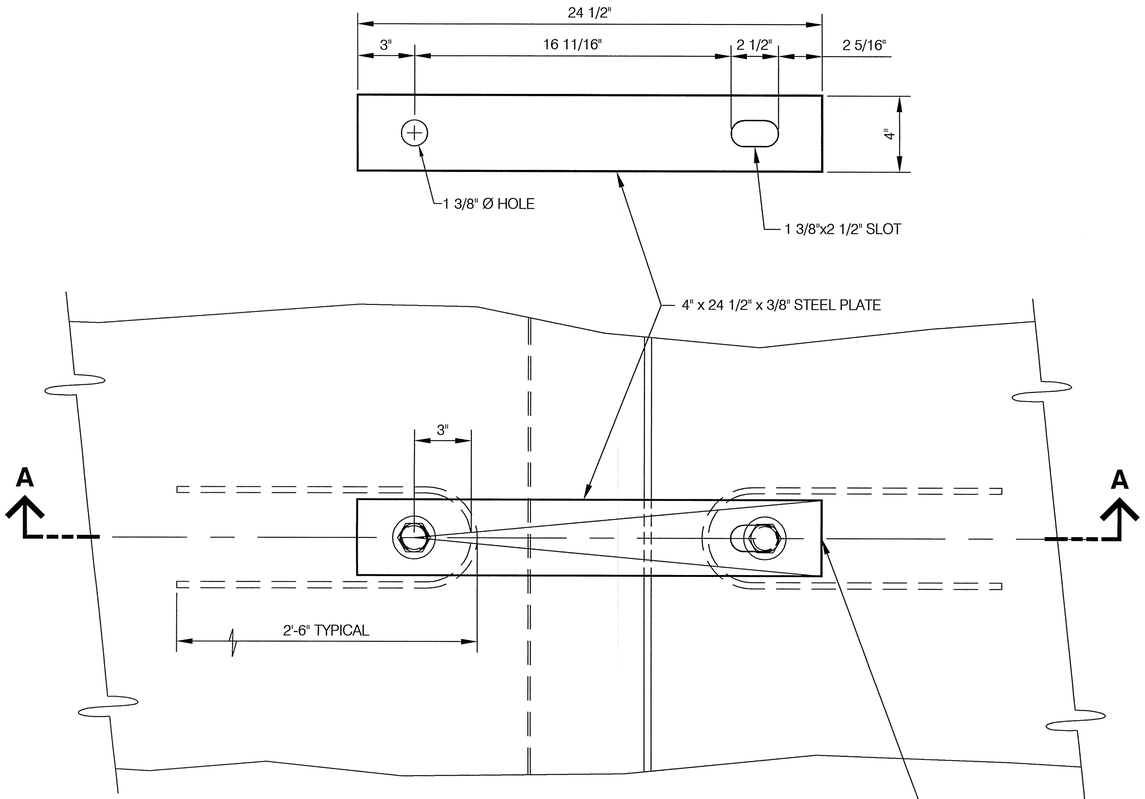

PLAN VIEW

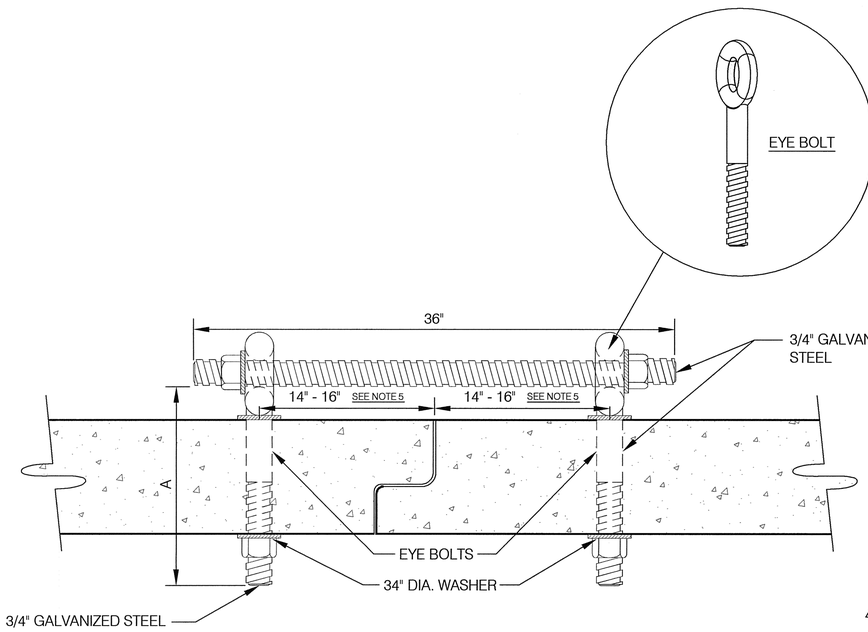

1 REINFORCED CONCRETE STORM SEWER PIPE

1

PIPE I.D.	WALL THICKNESS	ROD DIAMETER	"A"	NO. OF COUPLERS
12"-27"	2"-3 1/4"	5/8"	4 1/2"	2
30"-36"	3 1/2"-4"	5/8"	5"	2
42"-66"	5"-6 1/2"	3/4"	6" - 7 1/2"	2 or 3
72"-90"	7"-8 1/2"	3/4"	8" - 9 1/2"	3
96"-120"	9"-10"	1"	10" - 11"	3

1 NOTES:

1. ALL COUPLER ASSEMBLIES TO BE FURNISHED w/ 4 NUTS AND 4 WASHERS.
2. STANDARD THREADS SHALL BE USED ON ALL RODS AND NUTS.
3. ALL STEEL SHALL CONFORM TO ASTM A325.
4. ALL PARTS SHALL BE GALVANIZED TO ASTM A123.
5. VARIES DEPENDENT UPON IF OUTSIDE OF PIPE IS A BELL OR STRAIGHT SECTION AT THE JOINT.

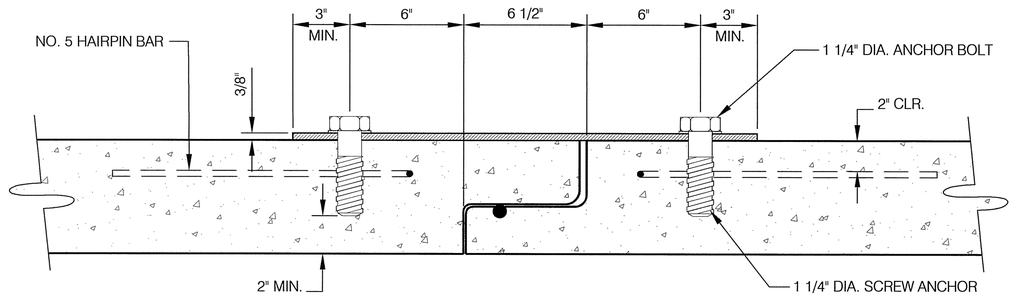

SECTION A-A
REINFORCED CONCRETE SANITARY SEWER PIPE
TONGUE & GROOVE JOINT

NOTES:

1. BOLT AND ANCHOR ASSEMBLIES SHALL BE 1 1/4" DIA. "RICHMOND TYPE" OR APPROVED EQUAL.
2. WASHERS SHALL BE USED AS NECESSARY TO OBTAIN A SNUG FIT.
3. BOLTS, WASHERS, AND STEEL PLATE SHALL BE GALVANIZED TO CONFORM TO ASTM A-123.

1	REVISION 02/01/2008

DESIGN ENGINEER

CITY ENGINEER

CITY OF OMAHA PUBLIC WORKS DEPARTMENT

REINFORCED CONCRETE PIPE COUPLERS

STANDARD PLATE 3-83

SHEET 1 / 1

ISSUE DATE: ... MARCH 26, 2003

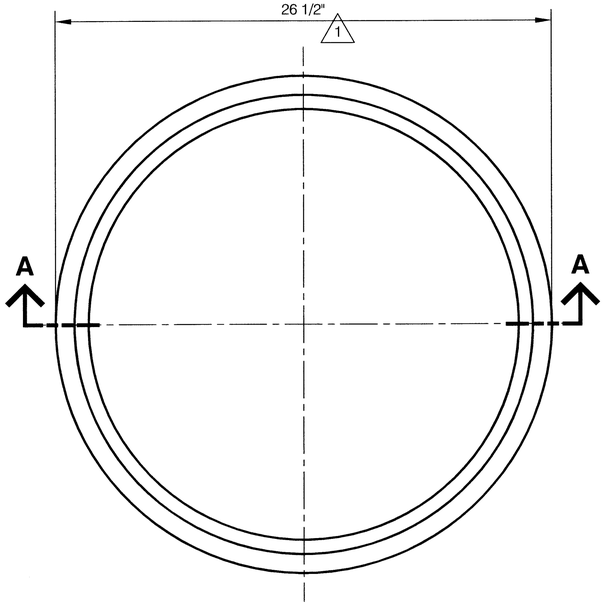

TOP VIEW

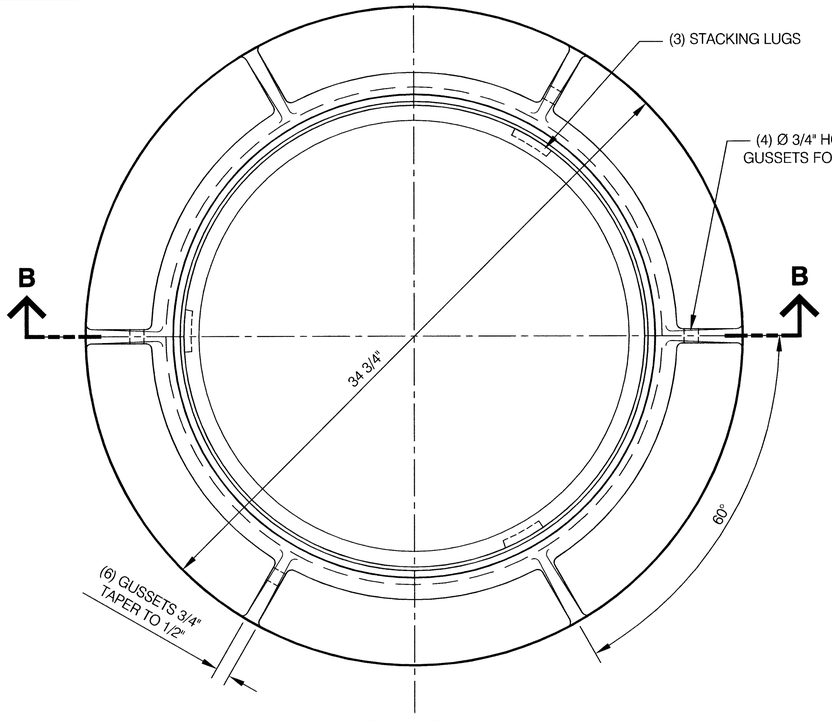

TOP VIEW

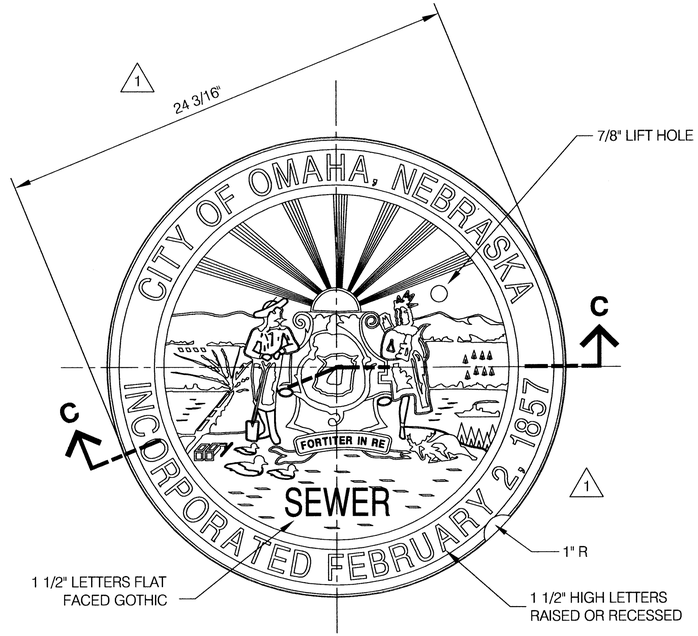

TOP VIEW

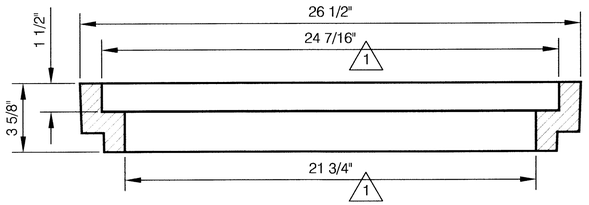

SECTION "A-A"

LIGHT WEIGHT RING

WT. 99 LBS.

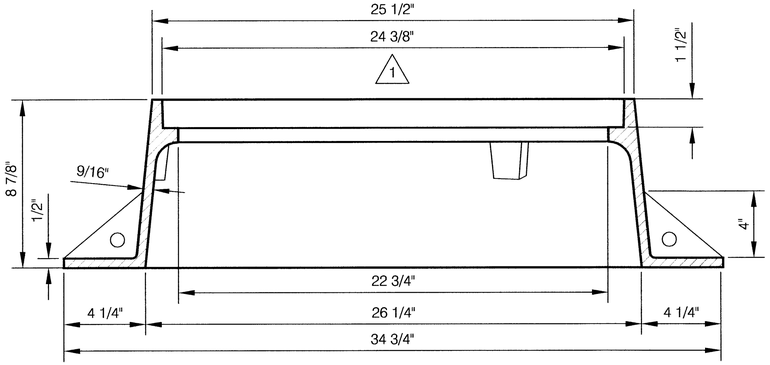

SECTION "B-B"

STANDARD CAST IRON MANHOLE RING

WT. 180 LBS.

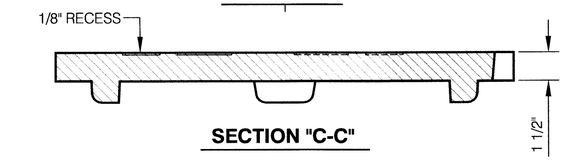

SECTION "C-C"

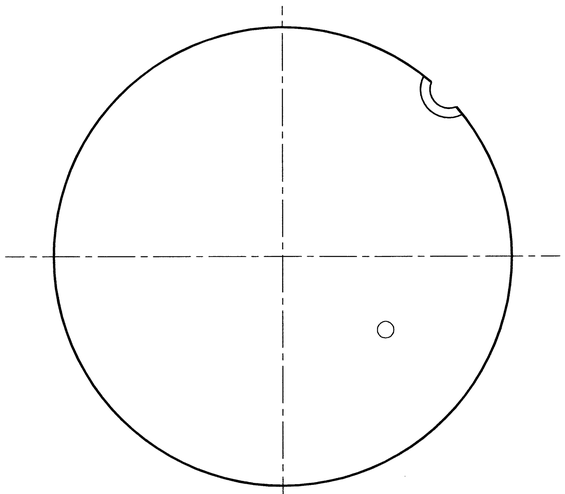

BOTTOM VIEW

STANDARD MANHOLE COVER

WT. 146 LBS.

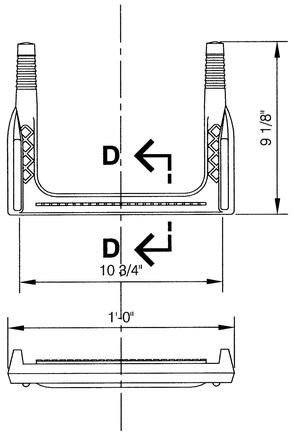

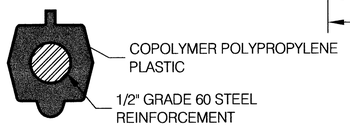

SECTION "D-D"

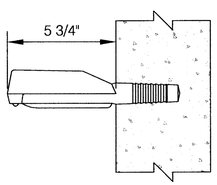

POLYPROPYLENE MANHOLE STEP

NOTES

1. MANHOLE RINGS, COVERS AND STEPS SHALL CONFORM TO THE REQUIREMENTS OF SECTION 702.02 OF THE STANDARD SPECIFICATIONS.
2. HORIZONTAL BEARING SURFACES SHALL BE MACHINED.

1	REVISION 10/14/2010	DESIGN ENGINEER PUBLIC WORKS DIRECTOR	CITY OF OMAHA PUBLIC WORKS DEPARTMENT **CAST IRON MANHOLE RINGS - COVER MANHOLE STEPS**	STANDARD PLATE **3-90** SHEET 1/2 ISSUE DATE: ..... JUNE 27, 2003

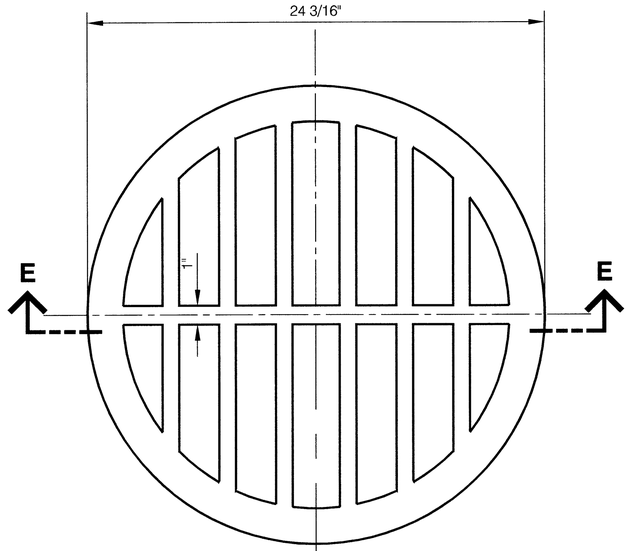

TOP VIEW

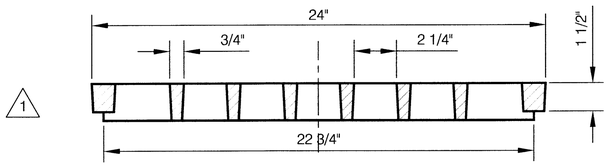

SECTION "E-E"

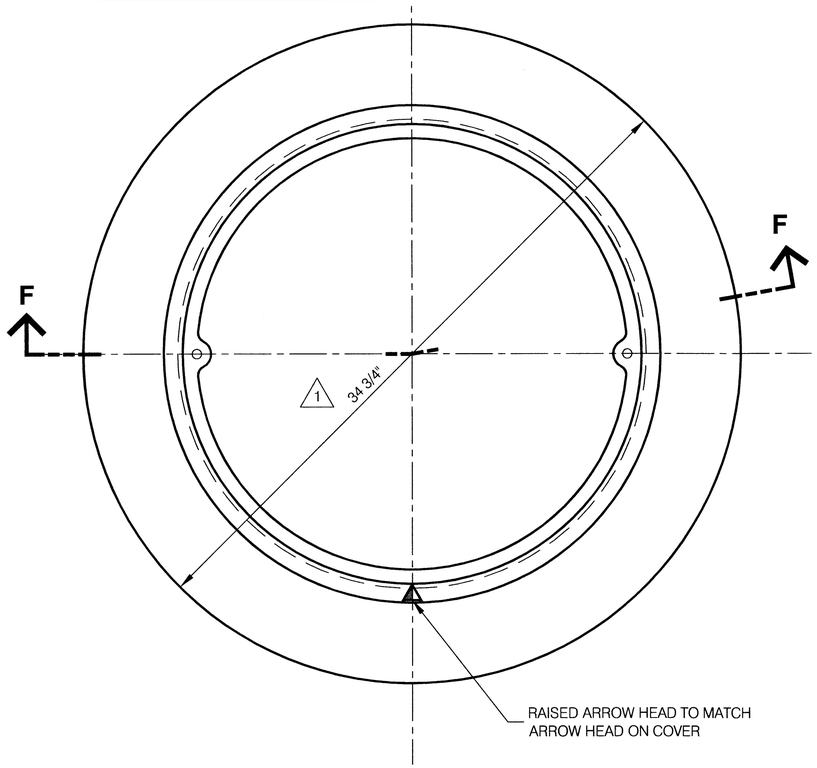

TOP VIEW

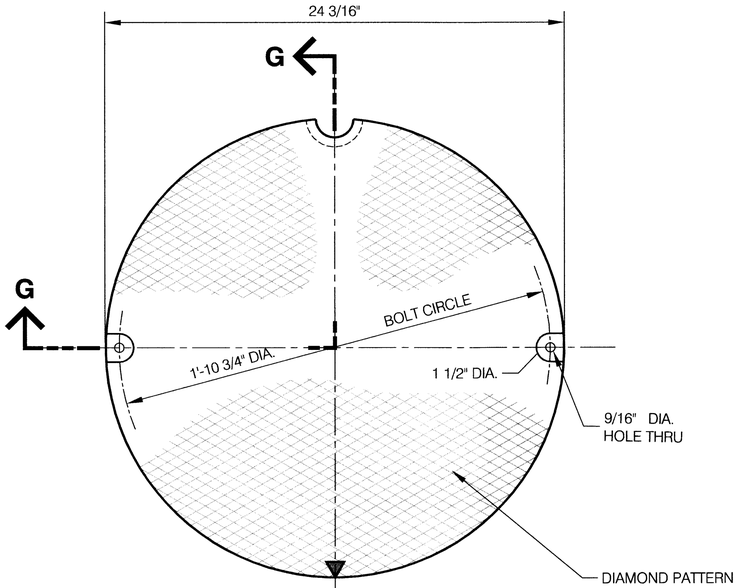

TOP VIEW

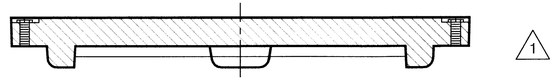

SECTION "G-G"

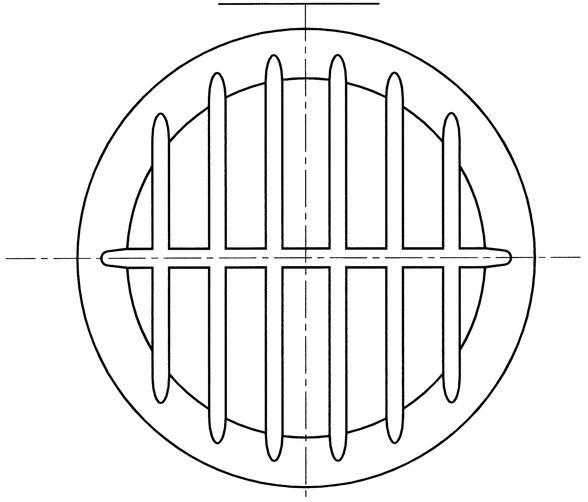

BOTTOM VIEW

GRATE COVER

1 WEIGHT = APPROX. 105 LBS.

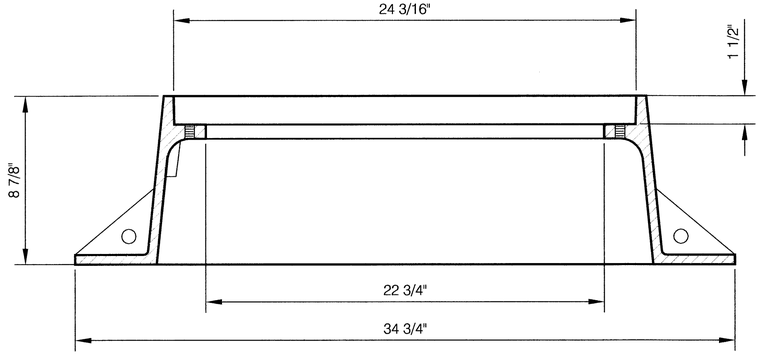

SECTION "F-F"

BOLT DOWN MANHOLE RING 1

TOTAL WEIGHT BOLT DOWN RING AND COVER = APPROX. 333 LBS.

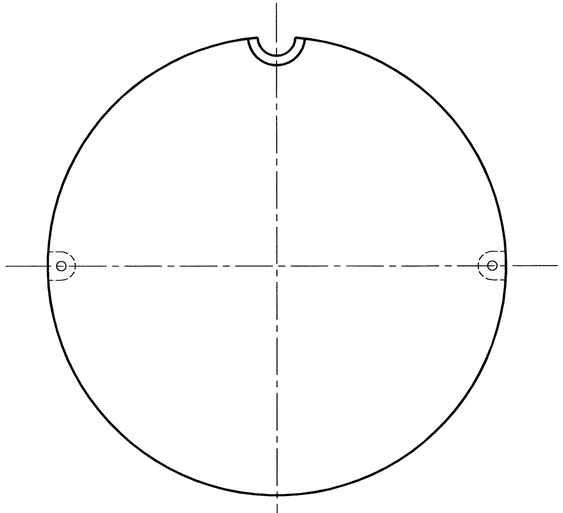

BOTTOM VIEW

BOLTED DOWN COVER

NOTES

1. CASTINGS SHALL CONFORM TO THE REQUIREMENTS OF SECTION 702.02 OF THE STANDARD SPECIFICATIONS.
2. BOLTS SHALL BE 1/2" - 13 UNC X 2 1/4" STAINLESS STEEL HEX HEAD CAP SCREWS.
3. HORIZONTAL BEARING SURFACES SHALL BE MACHINED.

1	REVISION 10/14/2010	DESIGN ENGINEER	CITY OF OMAHA — PUBLIC WORKS DEPARTMENT
		PUBLIC WORKS DIRECTOR	MANHOLE RING AND BOLT DOWN COVER GRATE TYPE MANHOLE COVER
			STANDARD PLATE **3-90** — SHEET 2/2
			ISSUE DATE: ..... MARCH 26, 2003

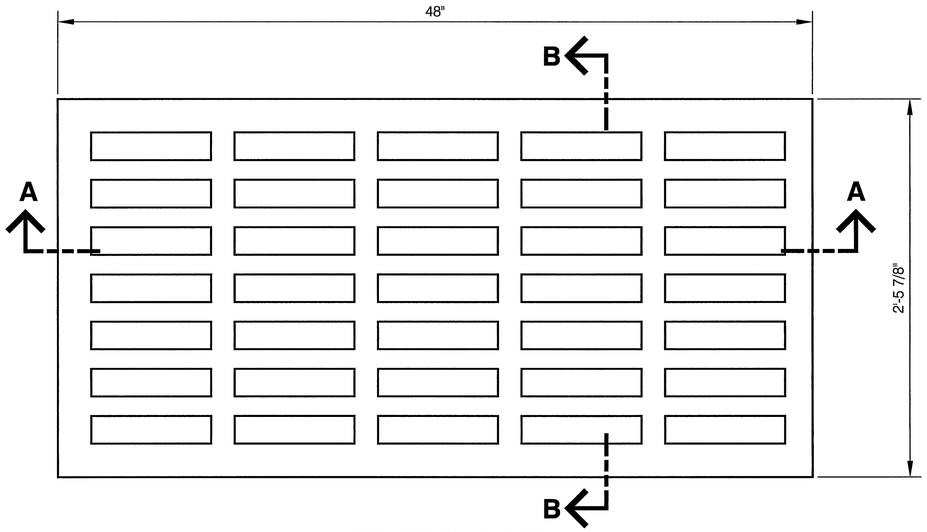

"A" GRATE PLAN VIEW

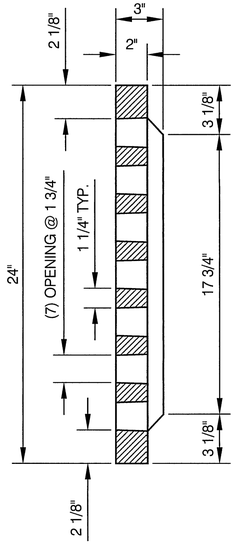

SECTION B-B

NOTES

1. GRATE, FRAME, AND CURB INLET SHALL CONFORM TO THE REQUIREMENTS FOR, "GRAY IRON CASTINGS", SECTION 702.02 OF THE STANDARD SPECIFICATIONS.
2. WEIGHTS: GRATE APPROX. 365 LBS.
   FRAME APPROX. 292 LBS.

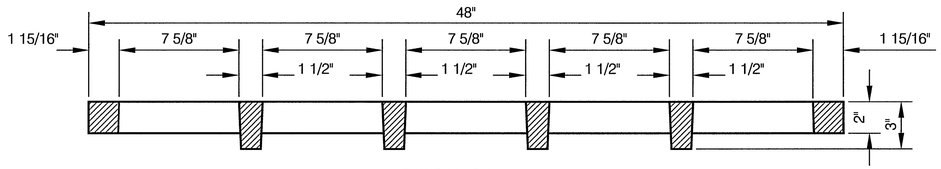

SECTION A-A

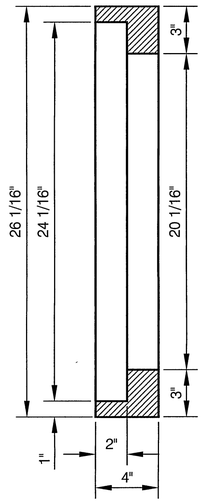

SECTION D-D

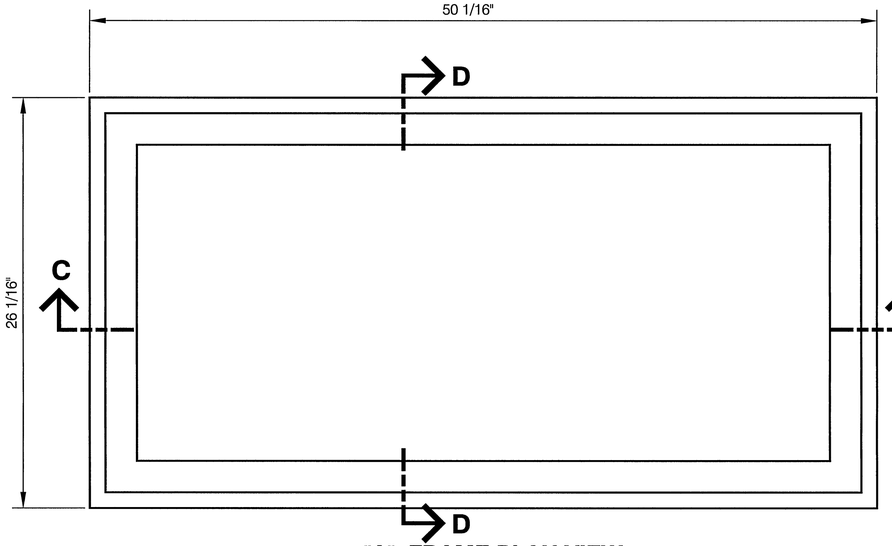

"A" FRAME PLAN VIEW

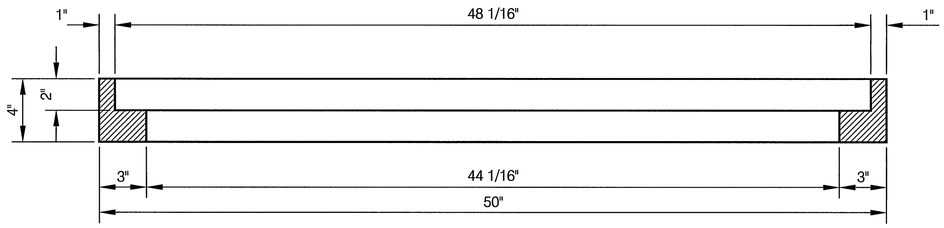

SECTION C-C

DESIGN ENGINEER

CITY ENGINEER

CITY OF OMAHA PUBLIC WORKS DEPARTMENT

TYPE "A" CAST IRON GRATE, FRAME & CURB INLET

STANDARD PLATE 3-92

SHEET 1/1

ISSUE DATE: ..... MARCH 26, 2003

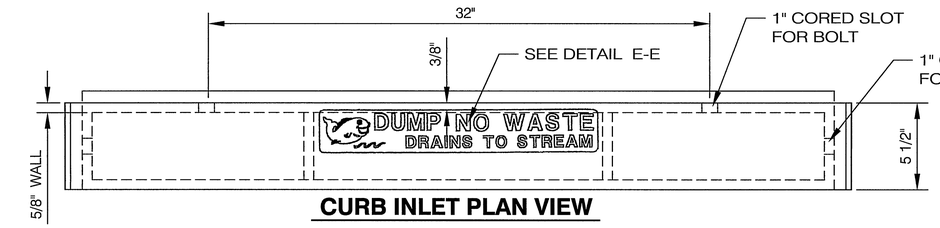

CURB INLET PLAN VIEW

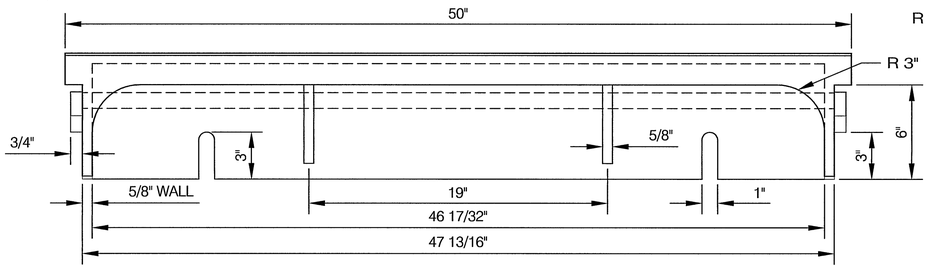

FRONT VIEW

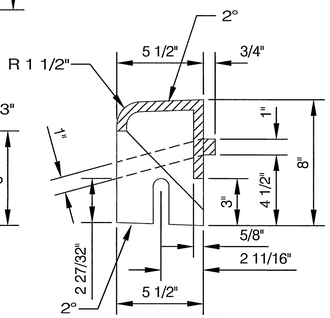

SECTION

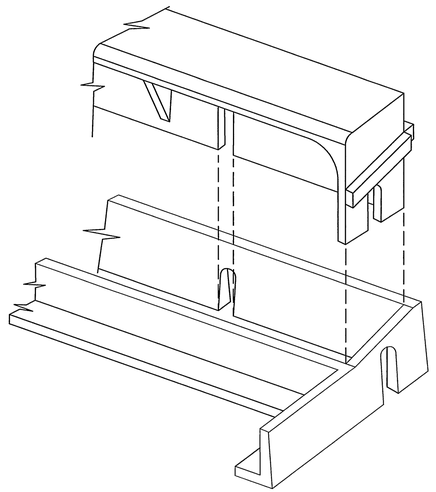

NOTES:

1. GRATE AND FRAME SHALL CONFORM TO ASTM A-48, CLASS 35B AND SECTION 702.02 OF THE "STANDARD SPECIFICATIONS".
2. WEIGHT: FRAME APPROX. 190 LBS.
   GRATE APPROX. 348 LBS.
   CURB APPROX. 160 LBS.

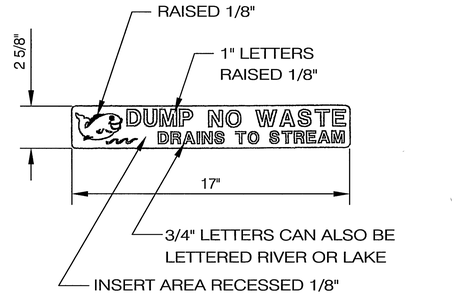

DETAIL E-E

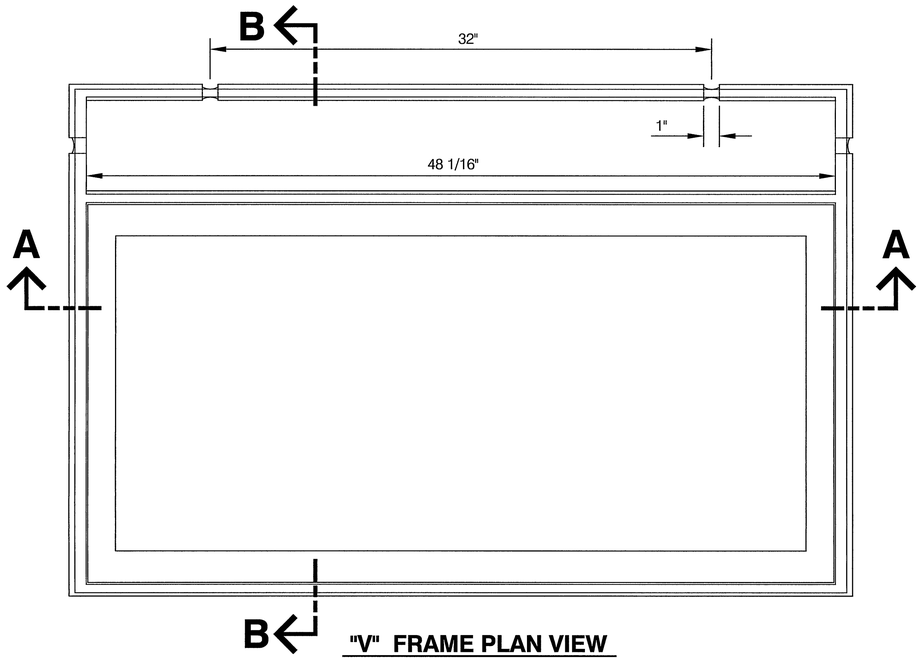

"V" FRAME PLAN VIEW

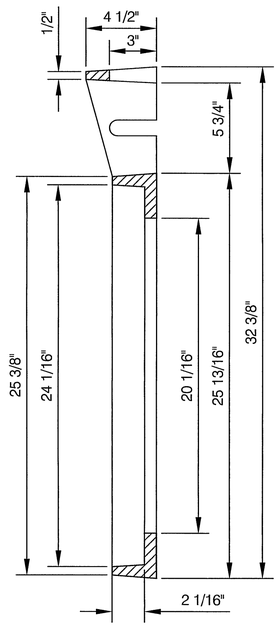

SECTION B-B

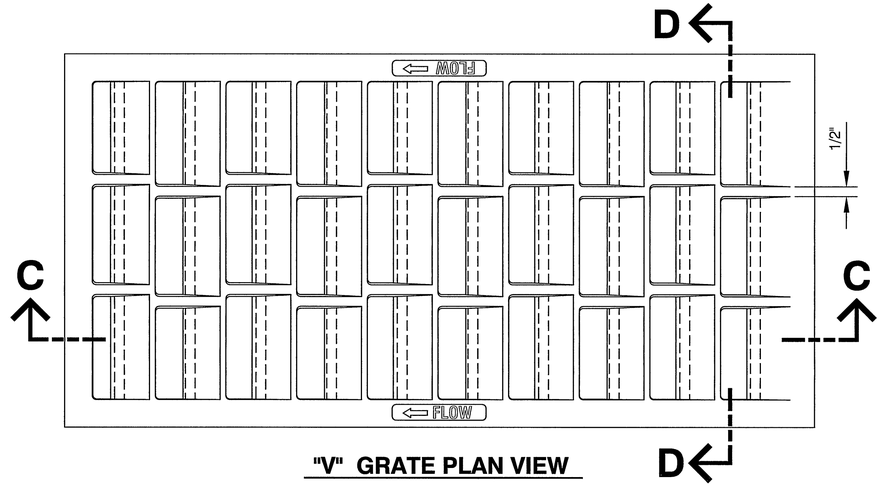

"V" GRATE PLAN VIEW

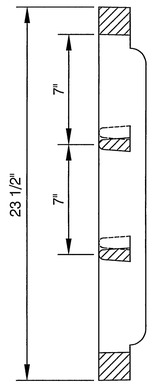

SECTION D-D

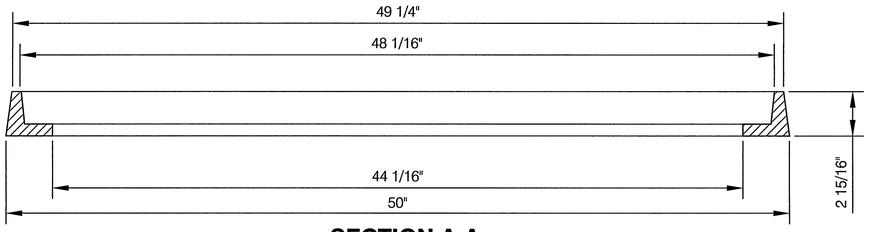

SECTION A-A

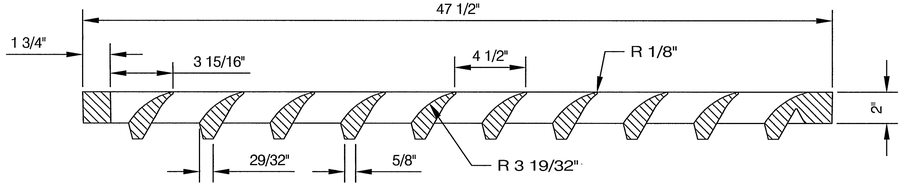

SECTION C-C

DESIGN ENGINEER

CITY ENGINEER

CITY OF OMAHA PUBLIC WORKS DEPARTMENT

TYPE "V" CAST IRON VANE GRATE, FRAME AND CURB INLET

STANDARD PLATE 3-93

SHEET 1/1

ISSUE DATE: ..... MARCH 26, 2003

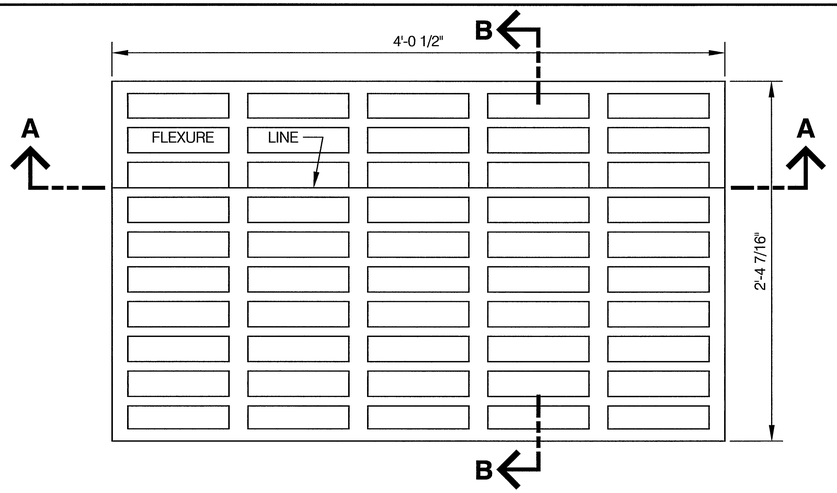

GRATE PLAN

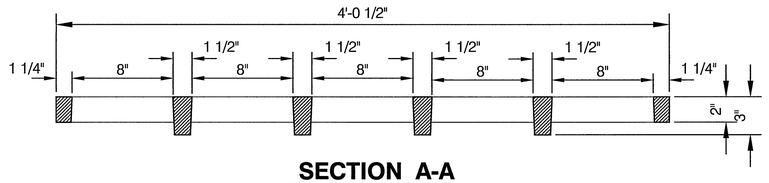

SECTION A-A

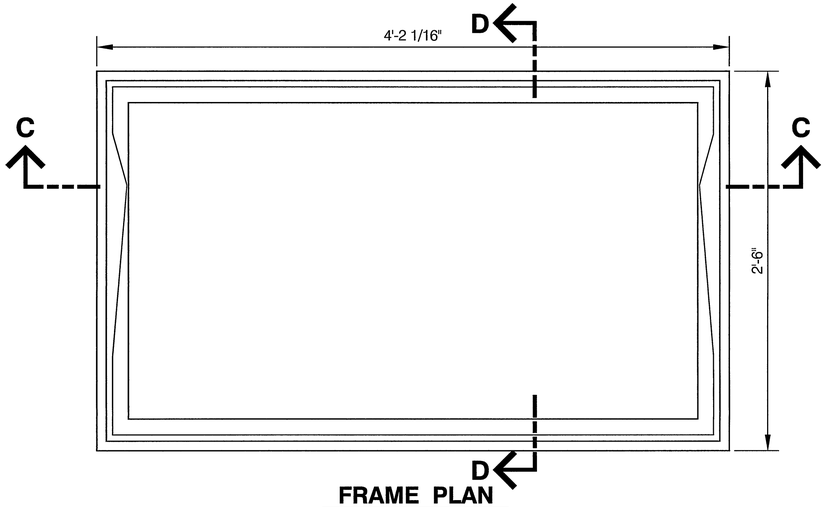

FRAME PLAN

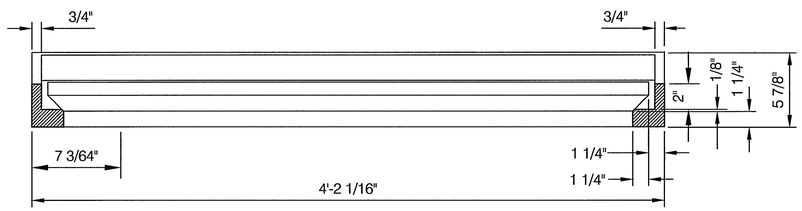

SECTION C-C

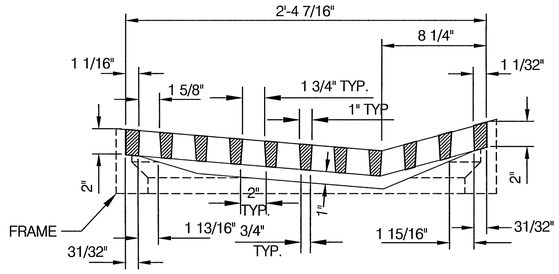

SECTION B-B

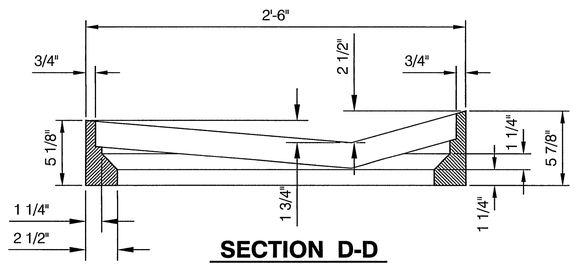

SECTION D-D

NOTES :

1. GRATE, FRAME, AND CURB INLET SHALL CONFORM TO THE REQUIREMENTS FOR, "GRAY IRON CASTINGS", SECTION 702.02 OF THE STANDARD SPECIFICATIONS.

2. APPROXIMATE WEIGHTS OF CASTINGS:
   GRATE 343 LBS.
   FRAME 324 LBS.

GRATE IN FRAME ISOMETRIC

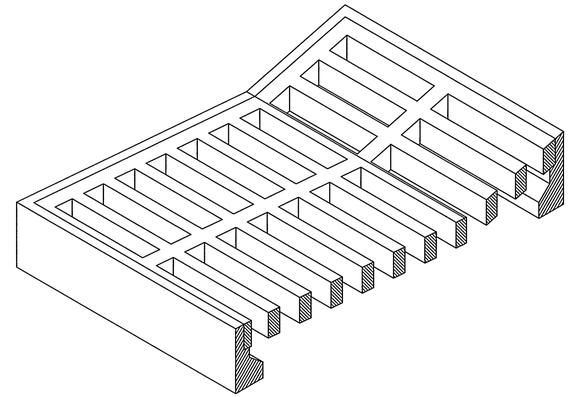

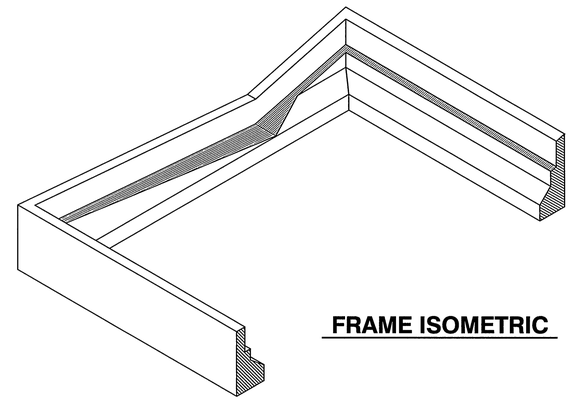

FRAME ISOMETRIC

DESIGN ENGINEER

CITY ENGINEER

CITY OF OMAHA PUBLIC WORKS DEPARTMENT

TYPE "SC" CAST IRON GRATE AND FRAME

STANDARD PLATE 3-94

SHEET 1/1

ISSUE DATE: ..... MARCH 26, 2003

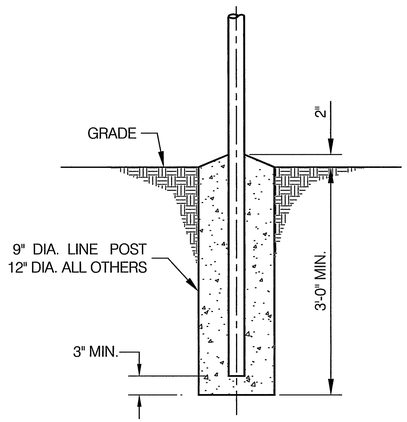

FOOTING DETAIL

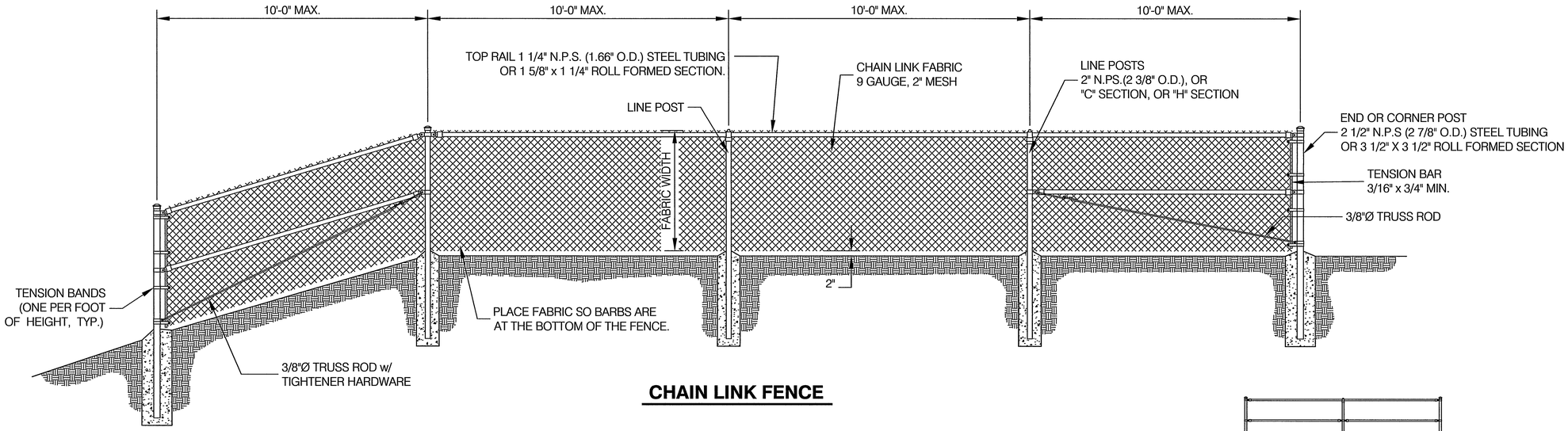

CHAIN LINK FENCE

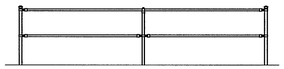

LESS THAN 2 LINE POSTS
BRACE ONLY

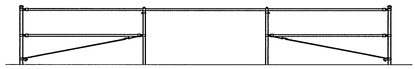

MORE THAN 2 LINE POSTS
BRACE AND TRUSS

BRACING CONFIGURATION

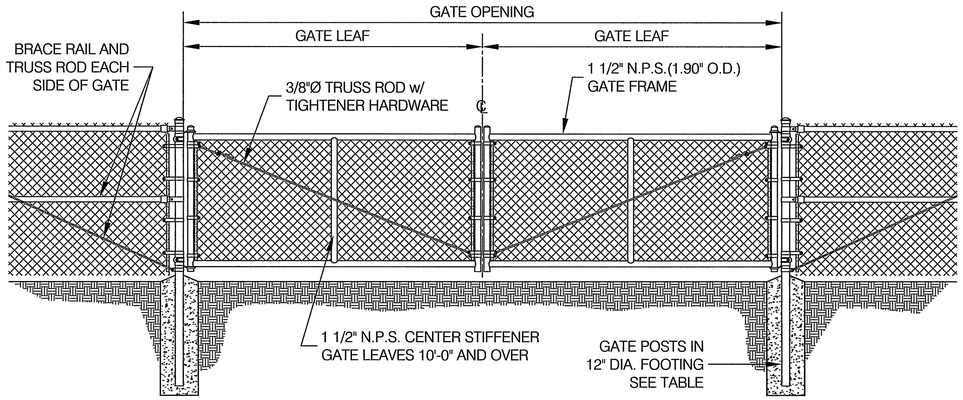

DOUBLE LEAF GATE

GATE FRAME AND POST SPECIFICATIONS		
	GATE FRAME	GATE POSTS
GATE LEAF UP TO 4'-0" FENCE HEIGHT UP TO 4'-0"	1 1/4" N.P.S. (1.66" O.D.)	3 1/2" ROLL FORMED OR 2 1/2" N.P.S (2.875" O.D.)
FENCE HEIGHTS 4'-0" OR GREATER GATE LEAF UP TO 6'-0"	1 1/2" N.P.S. (1.90" O.D.)	
GATE LEAF OVER 6'-0" TO 13'-0"		3 1/2" N.P.S. (4.00" O.D.)
GATE LEAF OVER 13'-0" TO 18'-0"		6" N.P.S. (6.625" O.D.)

NOMINAL PIPE SIZE (N.P.S.) TABLE OF DIMENSIONS AND WEIGHTS (PER ASTM A 53)			
NOMINAL PIPE SIZE (N.P.S.)	OUTSIDE DIAMETER	WALL THICKNESS	WEIGHT LBS./L.F.
	NOMINAL	NOMINAL	NOMINAL
1 1/4"	1.660"	0.140"	2.27
1 1/2"	1.900"	0.145"	2.72
2"	2.375"	0.154"	3.65
2 1/2"	2.875"	0.203"	5.79
3"	3.500"	0.216"	7.58
3 1/2"	4.000"	0.226"	9.11
6"	6.625"	0.280"	18.97

TABLE OF FENCE FRAMEWORK PHYSICAL PROPERTIES					
FRAMEWORK ITEM	OUTSIDE DIMENSIONS INCHES	MATERIAL THICKNESS INCHES	WEIGHT GALVANIZED LBS/FOOT	SECTION MODULUS INCHES	YIELD STRENGTH PSI
END, CORNER OR PULL POST	3.50" X 3.50"	0.128"	4.847	1.000	35,000
"H" SECTION LINE POST	2.25" X 1.70"	0.125"	3.26	0.661	45,000
"C" SECTION LINE POST	2.25" X 1.70"	0.121"	2.64	0.506	45,000
TOP OR BRACE RAIL	1.625" X 1.25"	0.0747"	1.35	0.165	35,000

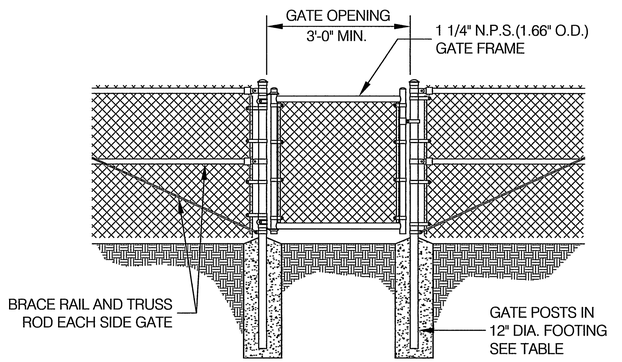

SINGLE LEAF WALKWAY GATE

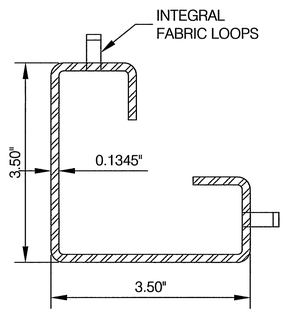

END, CORNER OR PULL POSTS ROLL FORMED SECTION

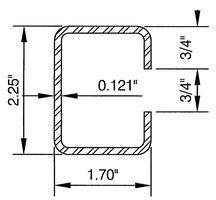

"C" SECTION LINE POST

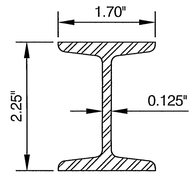

"H" SECTION LINE POST

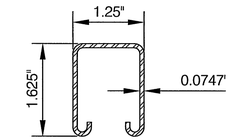

TOP AND BRACE RAIL ROLL FORMED SECTION

NOTES

1. CHAIN LINK FENCE MATERIALS AND CONSTRUCTION SHALL CONFORM TO SECTION 813 OF THE STANDARD SPECIFICATIONS.
2. CONCRETE USED FOR FOOTINGS SHALL HAVE A 28 DAY COMPRESSIVE STRENGTH OF NOT LESS THAN 2000 P.S.I.
3. FENCE HEIGHT SPECIFIED ON THE PLANS SHALL EQUAL THE FABRIC WIDTH.
4. GATES 12'-0" OR MORE SHALL BE OF DOUBLE LEAF TYPE.
5. ALL GATES SHALL HAVE A BRACE RAIL AND TRUSS ROD ON EACH SIDE.
6. VARIATIONS OF THE FENCE DESIGN SHOWN SHALL BE SUBJECT TO APPROVAL OF SHOP DRAWINGS.

DESIGN ENGINEER

CITY ENGINEER

CITY OF OMAHA PUBLIC WORKS DEPARTMENT

CHAIN LINK FENCE AND CHAIN LINK FENCE GATE DETAILS

STANDARD PLATE **4-01**

SHEET 1/1

ISSUE DATE: ..... MARCH 26, 2003

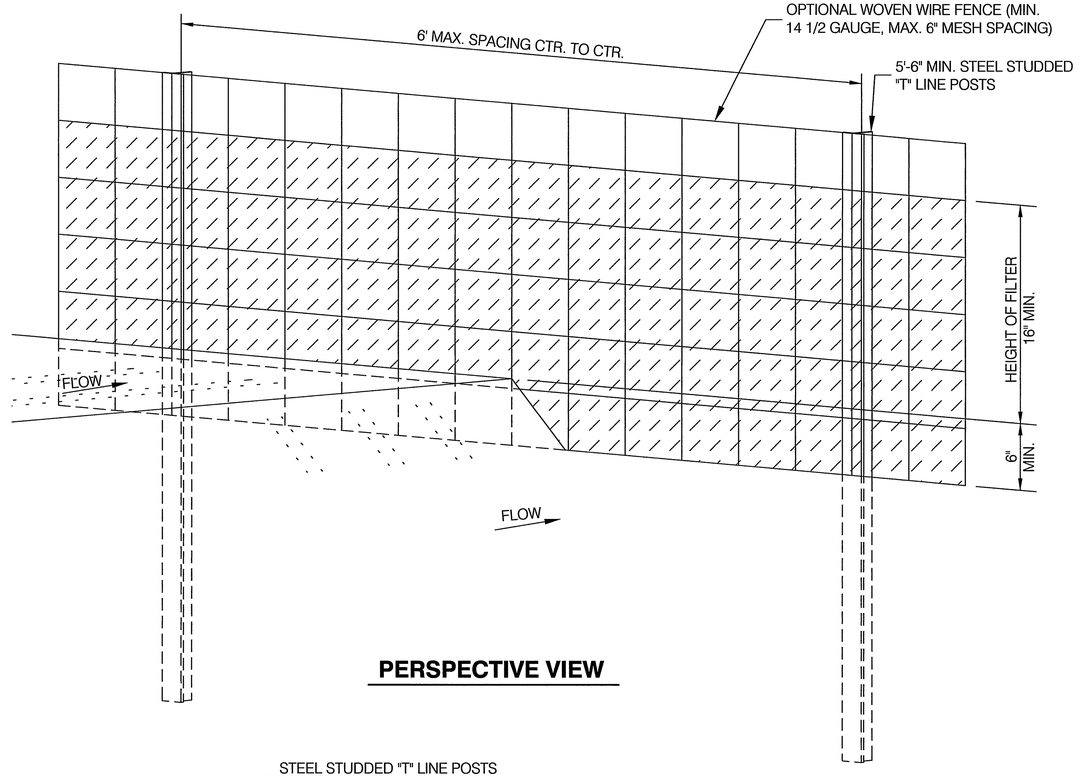

PERSPECTIVE VIEW

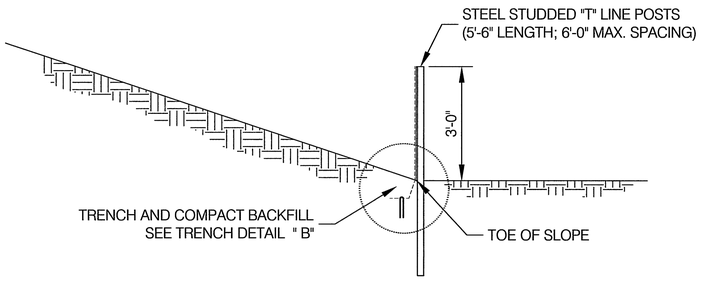

DETAIL OF FABRIC SILT FENCE AT TOE OF SLOPE

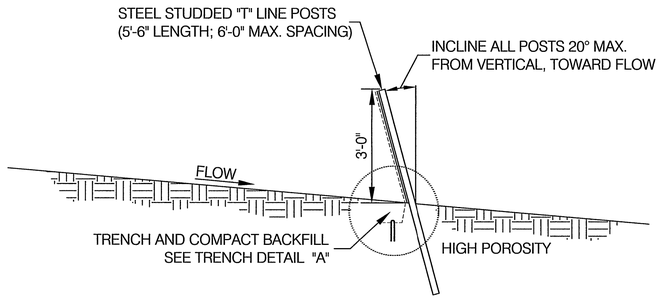

DETAIL OF FABRIC SILT FENCE

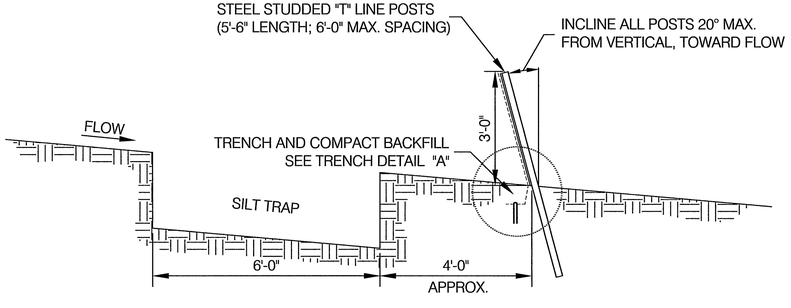

DETAIL OF FABRIC SILT FENCE AND SILT TRAP

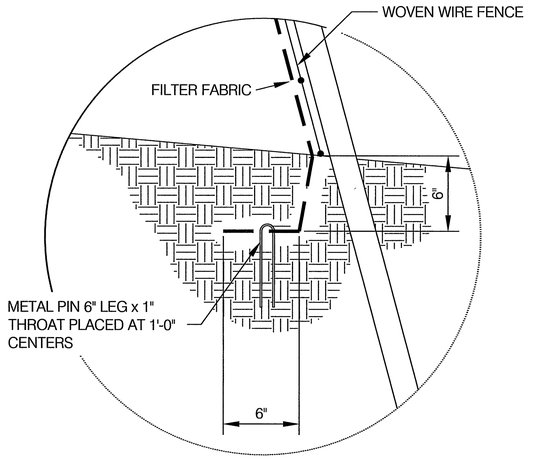

TRENCH DETAIL "A"

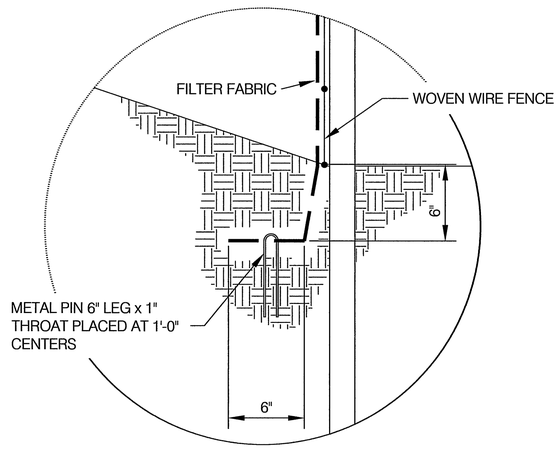

TRENCH DETAIL "B"

NOTES

1. ALL MATERIALS AND INSTALLATION SHALL CONFORM TO "CITY OF OMAHA SOIL EROSION AND SEDIMENTATION CONTROL MANUAL".
2. OPTIONAL WOVEN WIRE FENCE SHALL BE SECURELY FASTENED TO FENCE POSTS WITH WIRE TIES OR STAPLES.
3. FILTER CLOTH SHALL BE SECURELY FASTENED TO WOVEN WIRE FENCE WITH TIES SPACED EVERY 24" AT TOP AND MID SECTION.
4. WHEN TWO SECTIONS OF FILTER CLOTH ADJOIN EACH OTHER THEY SHALL BE OVERLAPPED BY SIX INCHES AND FOLDED.
5. MAINTENANCE SHALL BE PERFORMED AS NEEDED AND MATERIAL REMOVED WHEN "BULGES" DEVELOP IN THE SILT FENCE.
6. THE MAXIMUM CONTRIBUTING DRAINAGE AREA SHALL BE 5 ACRES.

DESIGN ENGINEER

CITY ENGINEER

CITY OF OMAHA PUBLIC WORKS DEPARTMENT

GEOTEXTILE FABRIC SILT FENCE

STANDARD PLATE 5-01

SHEET 1/1

ISSUE DATE: ..... MARCH 26, 2003

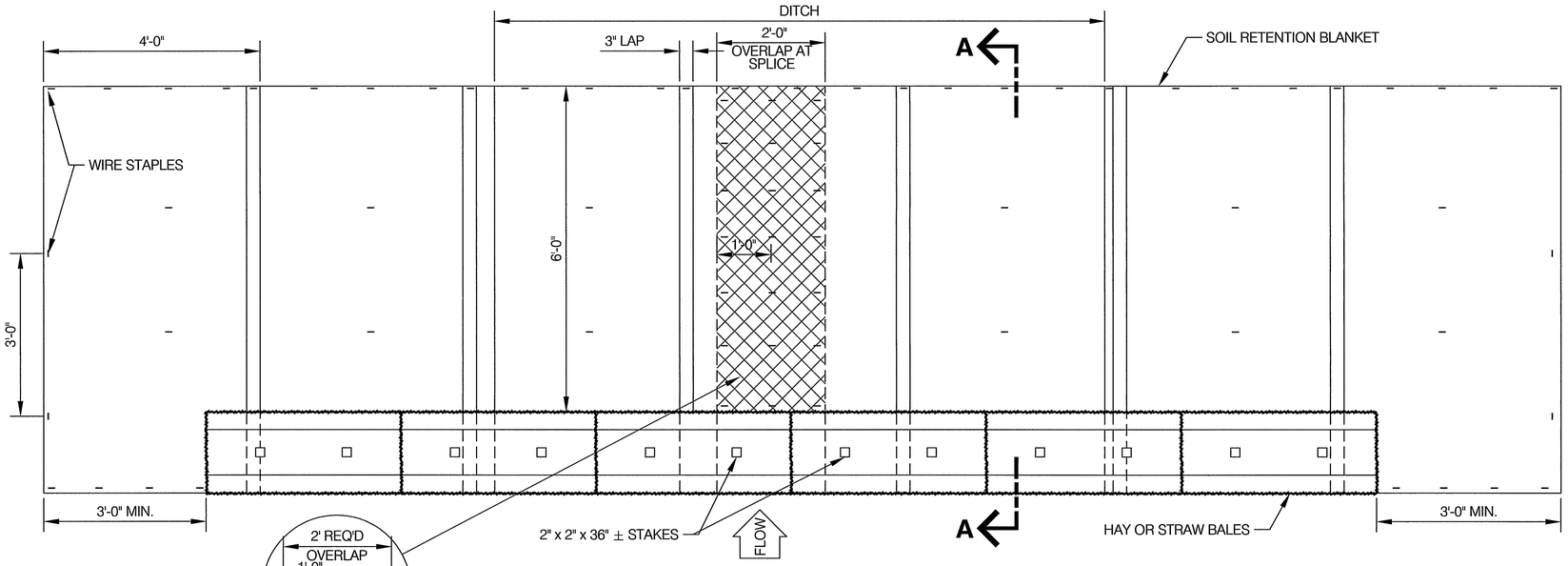

SILT CHECK PLAN

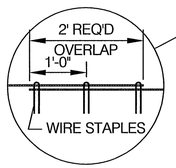

FILTER FABRIC SPLICE DETAIL

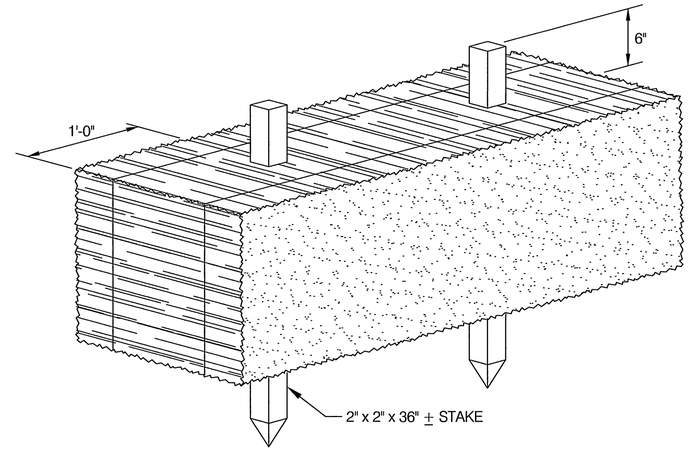

HAY BALE STAKING DETAIL

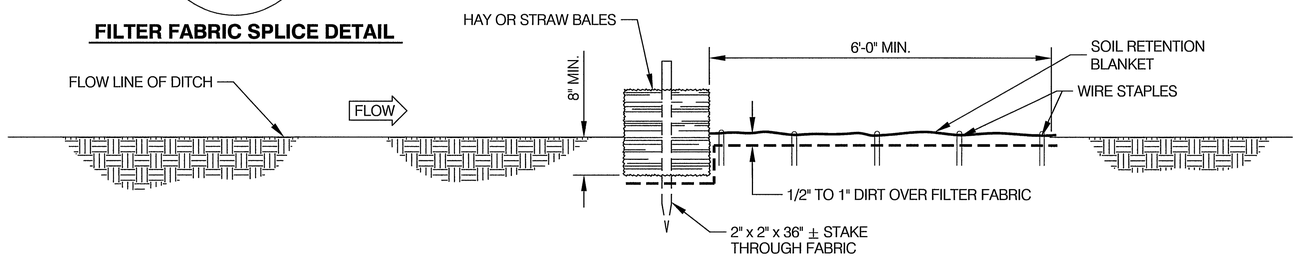

SECTION A-A

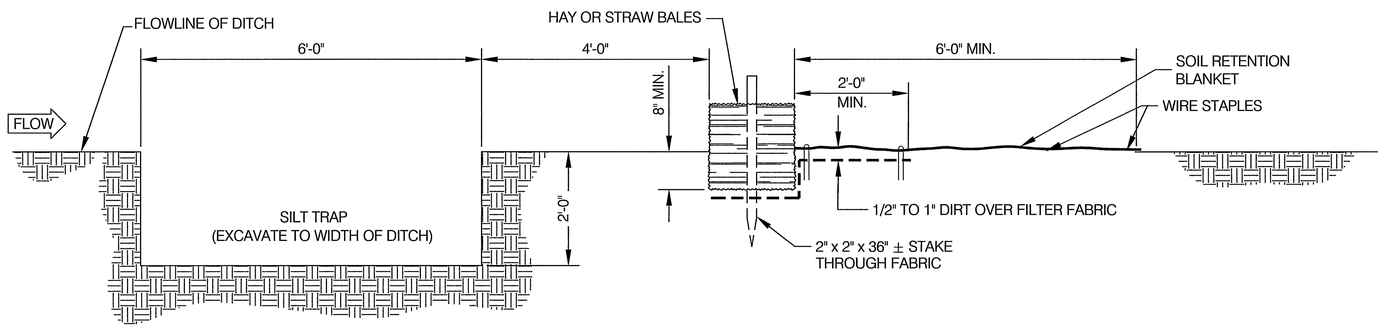

SECTION A-A WITH SILT TRAP

NOTES

1. BALES SHALL BE PLACED AT THE TOE OF A SLOPE OR ON THE CONTOUR AND IN A ROW WITH ENDS TIGHTLY ABUTTING THE ADJACENT BALES.
2. EACH BALE SHALL BE EMBEDDED IN THE SOIL A MINIMUM OF (8) INCHES, AND PLACED SO THE BINDINGS ARE HORIZONTAL.
3. BALES SHALL BE SECURELY ANCHORED IN PLACE BY EITHER TWO STAKES OR RE-BARS DRIVEN THROUGH THE BALE. THE FIRST STAKE IN EACH BALE SHALL BE DRIVEN TOWARD THE PREVIOUSLY LAID BALE AT AN ANGLE TO FORCE THE BALES TOGETHER. STAKES SHALL BE DRIVEN FLUSH WITH THE BALE.
4. SOIL RETENTION BLANKET SHALL CONFORM TO SECTION 809 OF THE "STANDARD SPECIFICATIONS". GEOTEXTILE FILTER FABRIC SHALL CONFORM TO "CITY OF OMAHA, SOIL EROSION AND SEDIMENTATION CONTROL MANUAL".
5. INSPECTION SHALL BE FREQUENT AND REPAIR REPLACEMENT SHALL BE MADE PROMPTLY AS NEEDED.
6. BALES SHALL BE REMOVED WHEN THEY HAVE SERVED THEIR USEFULNESS SO AS NOT TO BLOCK OR IMPEDE STORM FLOW OR DRAINAGE.
7. THE MAXIMUM CONTRIBUTING DRAINAGE AREA SHALL BE 5 ACRES.

DESIGN ENGINEER

CITY ENGINEER

CITY OF OMAHA PUBLIC WORKS DEPARTMENT

HAY BALE SILT CHECK

STANDARD PLATE 5-02

SHEET 1/1

ISSUE DATE: ..... MARCH 26, 2003

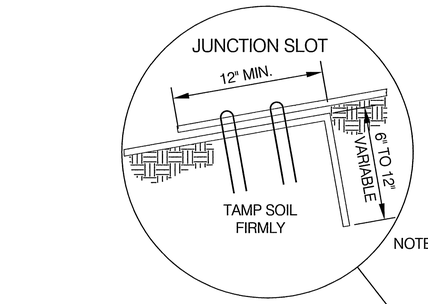

NOTE: STAGGER JUCTION SLOTS

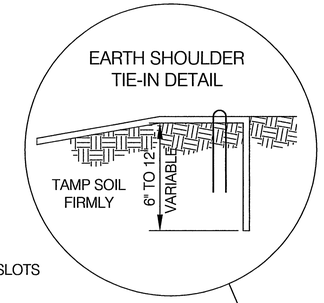

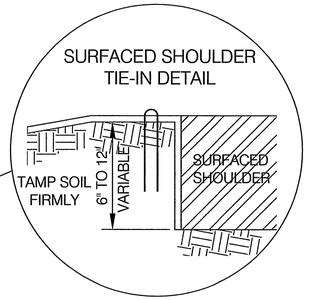

FLOW DIRECTION

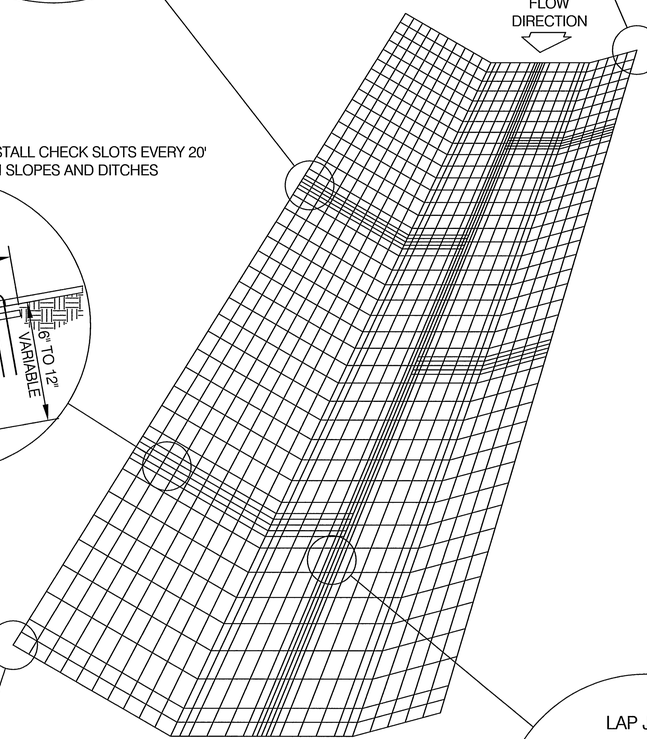

INSTALL CHECK SLOTS EVERY 20' ON SLOPES AND DITCHES

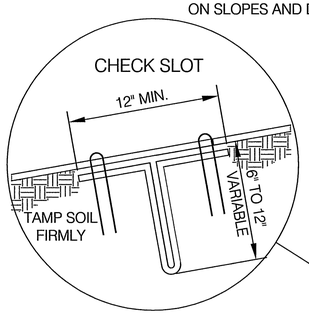

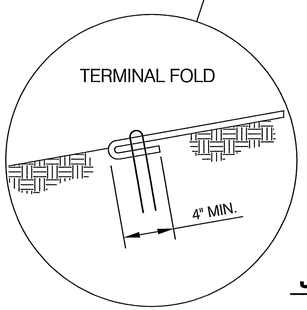

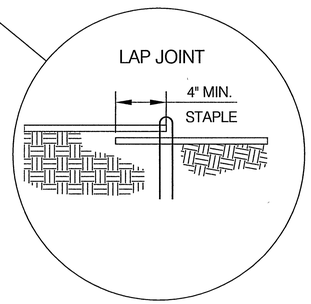

JUTE MESH INSTALLATION DETAILS

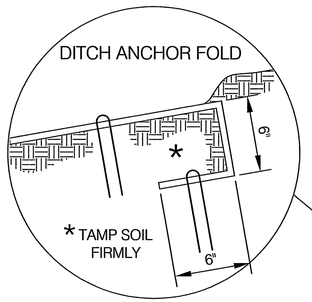

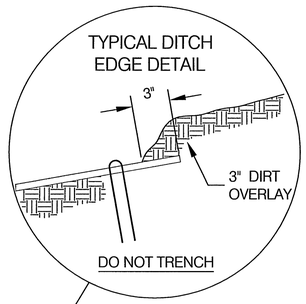

FLOW DIRECTION

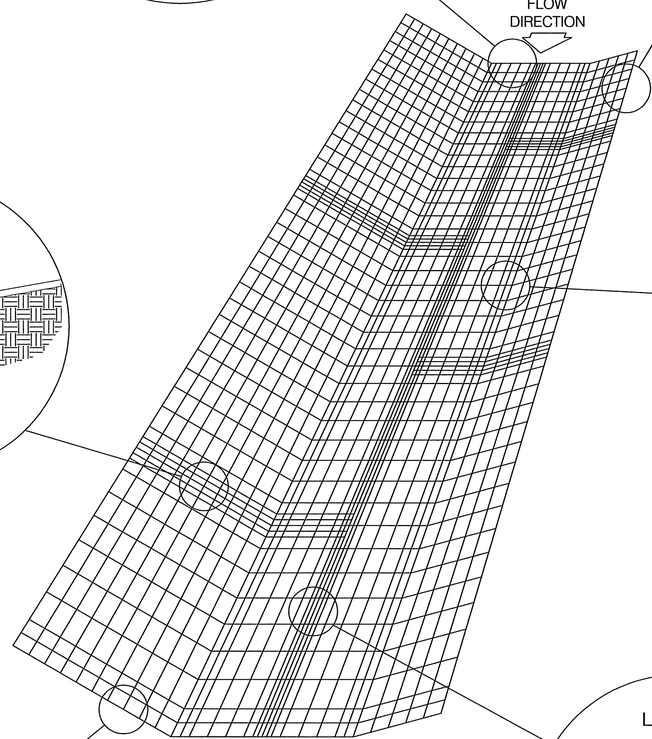

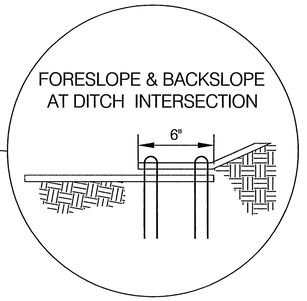

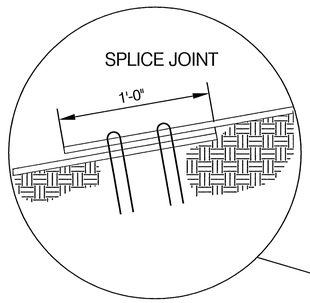

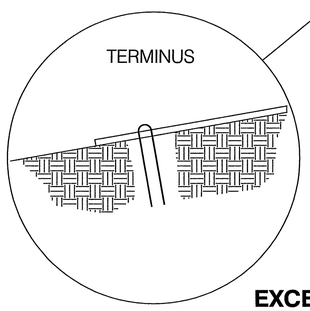

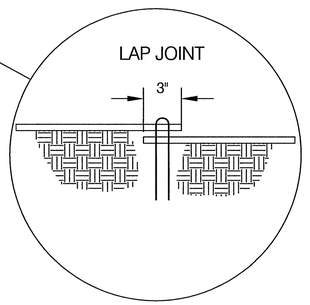

EXCELSIOR SOIL RETENTION BLANKET INSTALLATION DETAILS

DESIGN ENGINEER

CITY ENGINEER

CITY OF OMAHA PUBLIC WORKS DEPARTMENT

CHANNEL AND SLOPE SOIL STABILIZATION MAT DETAILS

STANDARD PLATE **5-10**

SHEET 1 / 1

ISSUE DATE: ..... MARCH 26, 2003

PULL BOX, TYPE PB-1 AND TYPE PB-1A

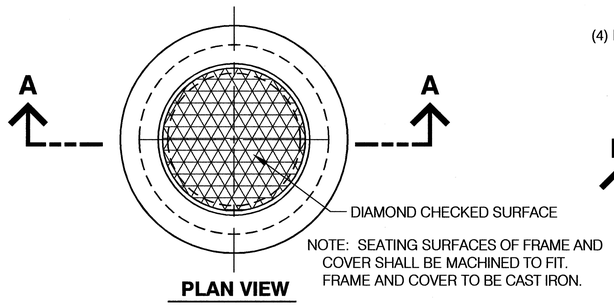

NOTE: SEATING SURFACES OF FRAME AND COVER SHALL BE MACHINED TO FIT. FRAME AND COVER TO BE CAST IRON.

PLAN VIEW

PULL BOX, TYPE PB-2

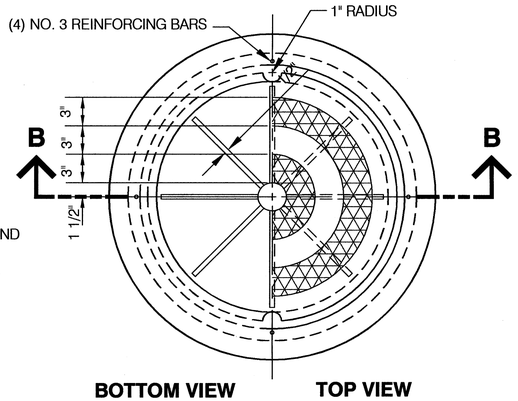

BOTTOM VIEW **TOP VIEW**

FIBER BOX DIMENSIONS				
PULLBOX TYPE	A	B	C	D
PB-6	18	27	18	30
PB-8	24	36	42	54
PB-10	36	48	42	54

ALL DIMENSIONS IN INCHES

FIBER BOXES

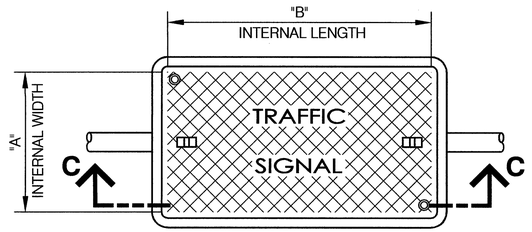

TYPE PB-1A

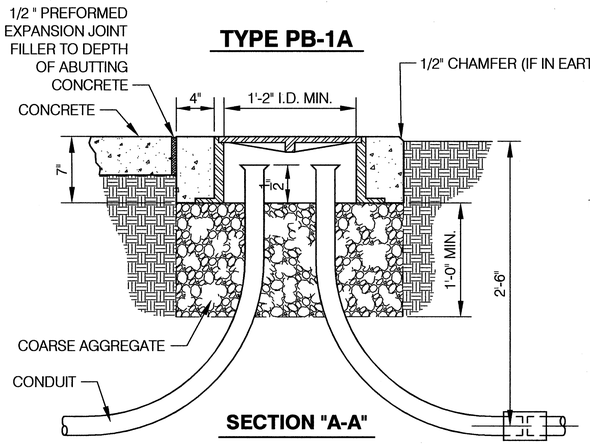

SECTION "A-A"

TYPE PB-1

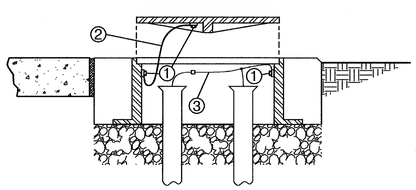

SECTION "A-A"

GROUNDING CONNECTIONS IN PULL BOX
(TYPICAL ALL METAL PULL BOXES)

① BRONZE GROUNDING LUG, (MAY BE BOLTED OR BRAZED TO RING AND COVER).

② FLEXIBLE GROUNDING CONDUCTOR: 24", NO. 6 THIN STRANDED COPPER, GREEN.

③ NO. 6 GROUNDING CONDUCTOR.

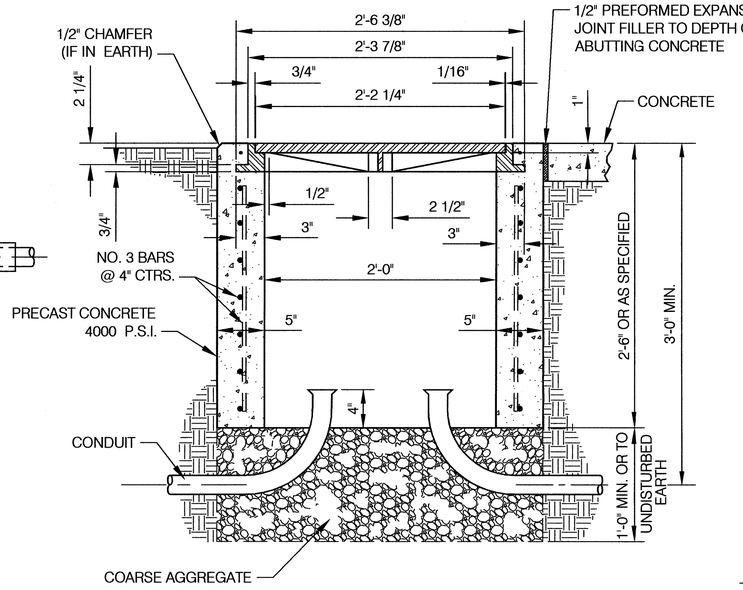

SECTION "B-B"

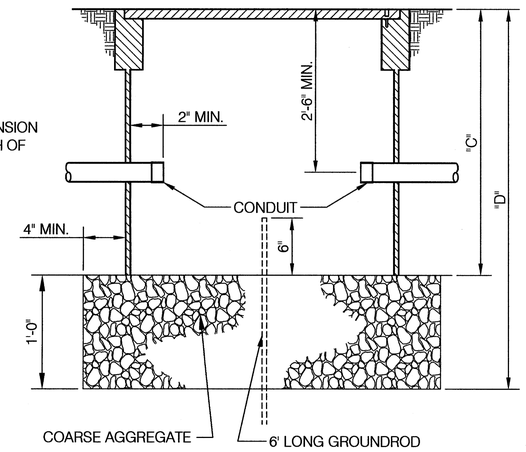

SECTION "C-C" ..... TYPE PB-8 & PB-10

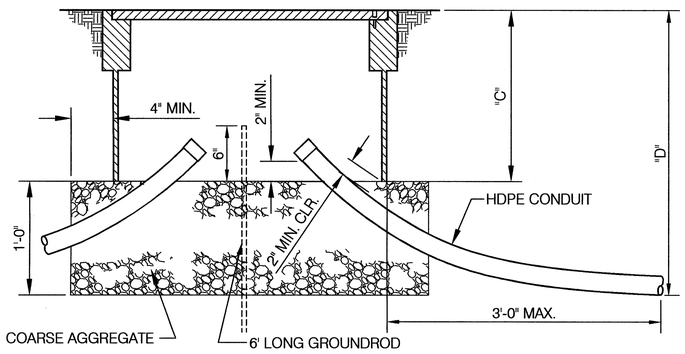

SECTION "C-C" ..... TYPE PB-6
HDPE CONDUIT

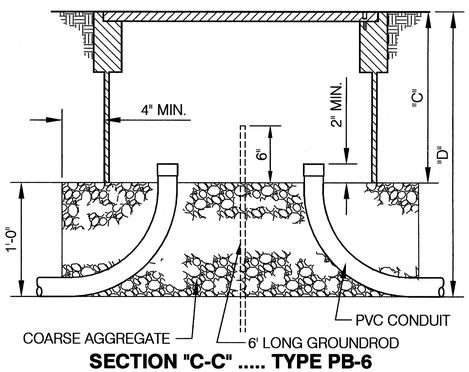

SECTION "C-C" ..... TYPE PB-6
PVC CONDUIT

NOTES:

1. ACCESS DUCTS, BENDS AND/OR STEPS ARE SUBSIDIARY TO THE ITEM "PULL BOX, TYPE PB-1", "PULL BOX, TYPE PB-1A", OR "FIBER BOXES".
2. COARSE AGGREGATE FOR FILL MATERIAL SHALL BE COMPOSED OF CLEAN, HARD, DURABLE AND UNCOATED PARTICLES, MINIMUM OF 1" IN DIAMETER.
3. CONDUIT TERMINATION IN PULL BOX SHALL BE FITTED WITH BELL OR FLARED END.
4. PULL BOXES WHICH ARE INTENDED FOR INSTALLATION IN SURFACED AREA, SUCH AS SIDEWALKS OR SURFACED MEDIANS, SHALL HAVE A LIP OR FLANGED EDGE FRAMING THE COVER OPENING TO PROVIDE A FLUSH, FRAMED SEPARATION BETWEEN THE SURFACING MATERIAL AND THE EDGES OF THE COVER.
5. FIBER PULL BOXES ARE INTENDED TO BE INSTALLED BEHIND CURBS OR SIDEWALKS AT DISTANCES OFF THE ROADWAY WHERE NO DELIBERATE VEHICULAR TRAFFIC IS ANTICIPATED AND ONLY AN OCCASIONAL HEAVY VEHICLE WILL BE ENCOUNTERED.
6. PULL BOX ILLUSTRATIONS ARE TYPICAL AND ARE NOT INTENDED TO LIMIT DESIGN.
7. FIBER PULL BOXES SHALL BE MANUFACTURED ENTIRELY OF POLYMER CONCRETE (PC) CONSISTING OF AGGREGATE BOUND TOGETHER WITH POLYESTER RESINS AND REINFORCED WITH WOVEN GLASS STRANDS OF FIBER POLYESTER REINFORCEMENT OR A COMBINATION OF POLYMER CONCRETE AND STRUCTURAL FIBERGLASS REINFORCED POLYMERS (FRP) OR A COMBINATION OF POLYMER CONCRETE AND HIGH DENSITY POLYETHYLENE (HDPE).
8. FIBER PULL BOX COVERS SHALL BE MADE OF HEAVY DUTY POLYMER CONCRETE CONSTRUCTION, EITHER SOLID OR SUFFICIENTLY RIBBED TO WITHSTAND THE STATIC LOADS AS REQUIRED BELOW. THE MANUFACTURER'S NAME AND THE LOGO, "TRAFFIC SIGNAL", SHALL BE ON THE COVER. THE COVER SHALL BE HELD SECURELY IN PLACE BY TWO OR MORE 3/8" (MIN. DIA.) STAINLESS STEEL HEX HEAD BOLTS WITH FLAT WASHERS. BOLTS SHALL BE CAPTIVE TO COVER.
9. FIBER PULL BOX ASSEMBLIES (BOX WITH COVER SECURELY ATTACHED) SHALL BE DESIGNED FOR A VERTICAL STATIC LOAD OF 16,000 POUNDS WITH A 1.3 SAFETY FACTOR. A VERTICAL TEST LOAD OF 20,800 POUNDS APPLIED TO A 10" x 10" STEEL PLATE CENTERED ON THE COVER'S SURFACE SHALL NOT CAUSE FAILURE ON ANY PART OF THE ASSEMBLY.
10. FIBER PULL BOX ASSEMBLIES (BOX WITH COVER SECURELY ATTACHED) SHALL BE DESIGNED FOR A 200 PSF LATERAL STATIC PRESSURE WITH A 3.0 SAFETY FACTOR. A 1,800 POUND TEST LOAD APPLIED TO A 24" x 18" STEEL PLATE CENTERED ON THE WALL OF THE BOX HAVING THE LONGEST DIMENSION, SHALL CAUSE NO PERMANENT DAMAGE TO ANY PART OF THE ASSEMBLY.
11. MANUFACTURER'S CERTIFIED TEST RESULTS, SHOWING COMPLIANCE WITH SPECIFIED DESIGN LOADS AND SAFETY FACTORS ALONG WITH A PHYSICAL DESCRIPTION OF THE TESTING METHODS USED TO ACHIEVE THOSE RESULTS, WILL BE REQUIRED FOR EACH TYPE OF PULL BOX BEING FURNISHED. TEST RESULTS SHALL SHOW THE PROJECT NUMBER, CONTROL NUMBER, AND PROJECT LOCATION AND SHALL BE SIGNED BY AN AUTHORIZED REPRESENTATIVE OF THE FIRM MANUFACTURING THE PULL BOX.

TRAFFIC ENGINEER
CITY ENGINEER

CITY OF OMAHA PUBLIC WORKS DEPARTMENT

PULL BOX DETAILS
TYPES PB-1, PB-1A, PB-2, PB-6, PB-8, PB-10

STANDARD PLATE **6-01R1**

SHEET 1/1

ISSUE DATE: ..... APRIL 26, 2006

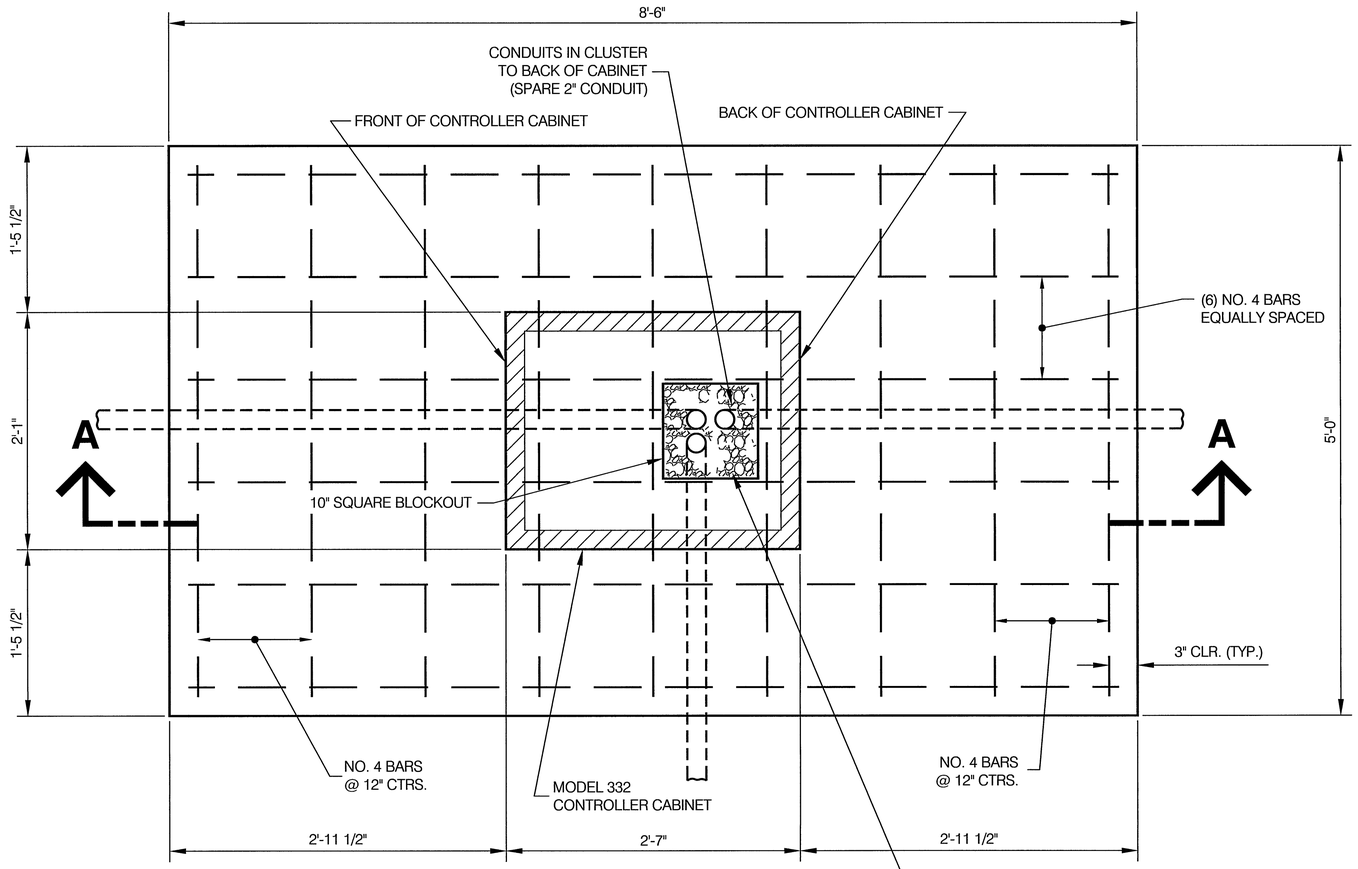

PLAN VIEW

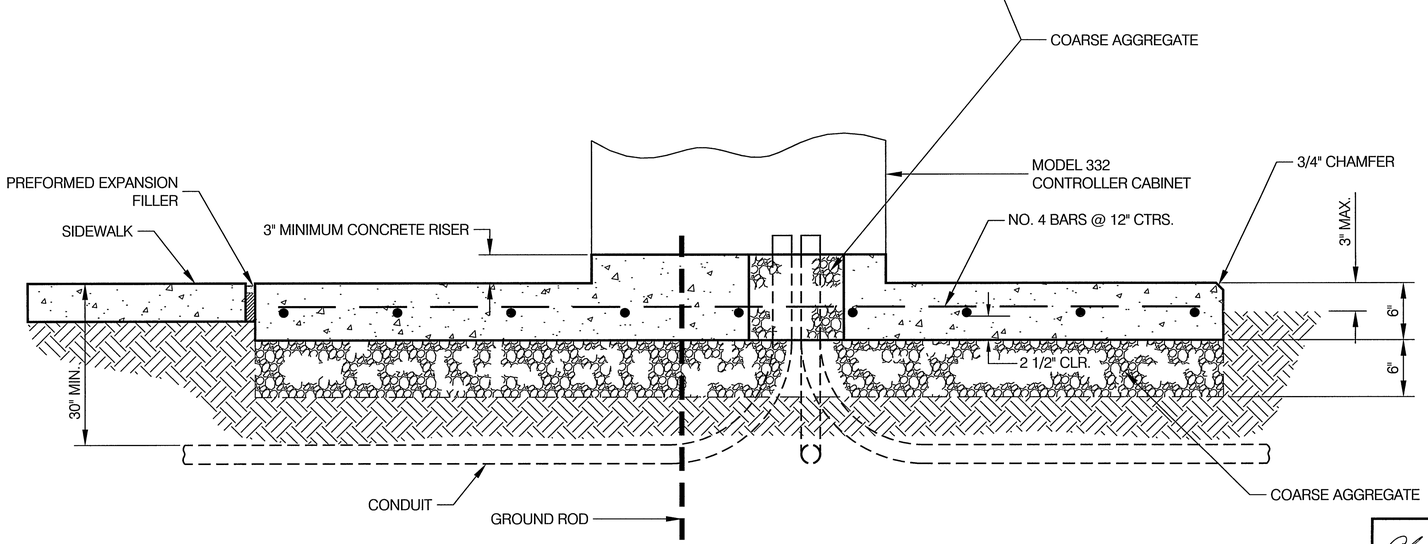

SECTION "A-A"

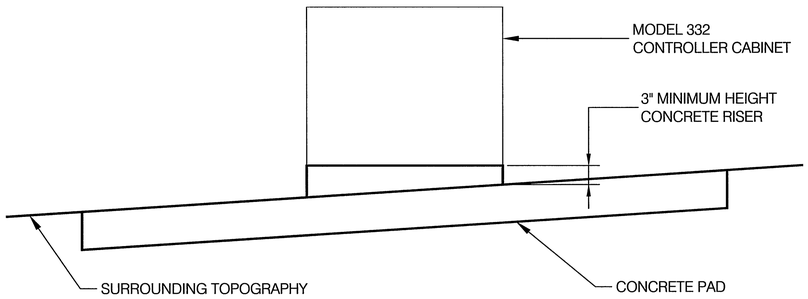

SIDE VIEW

NOTES

1. ALL WORK SHALL CONFORM TO THE NATIONAL ELECTRIC CODE AND ANY LOCAL REGULATIONS.
2. THE ENDS OF THE SPARE CONDUCTORS SHALL NOT BE CUT BACK AND SHALL BE NEATLY COILED AND TAPED BACK FOR POSSIBLE FUTURE USE. ALL CABLES ENTERING CONTROLLER CABINET SHALL BE IDENTIFIED BY MEANS OF METAL TAGS.
3. ALL REINFORCING STEEL SHALL BE DEFORMED BARS CONFORMING TO THE REQUIREMENTS OF SECTION 1036.01 OF THE STANDARD SPECIFICATIONS.
4. ALL CONCRETE SHALL CONFORM TO SECTION 901 OF THE STANDARD SPECIFICATIONS.
5. THERE SHALL BE AT LEAST ONE SPARE 3" CONDUIT BEND INSTALLED IN EACH CONTROLLER FOUNDATION WITH BOTH ENDS PLUGGED AND FREE OF DEBRIS AND MOISTURE.
6. CONTROLLER PADS LOCATED WITHIN SIDEWALK AREAS SHALL BE PLACED AT THE SAME GRADE AS SIDEWALK AND A 3" CONCRETE RISER SHALL BE CONSTRUCTED AS SHOWN.
7. CONTROLLER PAD SHALL BE PLACED AT SAME SLOPE AS SURROUNDING GROUND.
8. 3" CONCRETE RISER (MINIMUM HEIGHT) SHALL BE CONSTRUCTED TO INSURE CABINET IS LEVEL. RISER SHALL BE CONSTRUCTED TO THE SAME DIMENSIONS AS THE CONTROLLER BASE, IF DIFFERENT THAN THE ABOVE.

TRAFFIC ENGINEER

CITY ENGINEER

CITY OF OMAHA PUBLIC WORKS DEPARTMENT

CONCRETE PAD DETAIL FOR PAD MOUNTED CONTROLLER CABINET

STANDARD PLATE **6-04**

SHEET 1/1

ISSUE DATE: ..... MARCH 26, 2003

TYPE PPM-1
SIGNAL HEAD
WITHOUT PEDESTRIAN HEADS

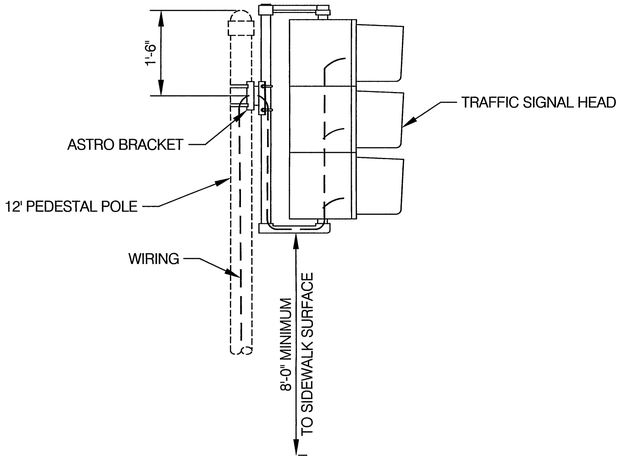

TYPE PPM-2
PEDESTRIAN SIGNAL
WITH ONE WAY SIGN

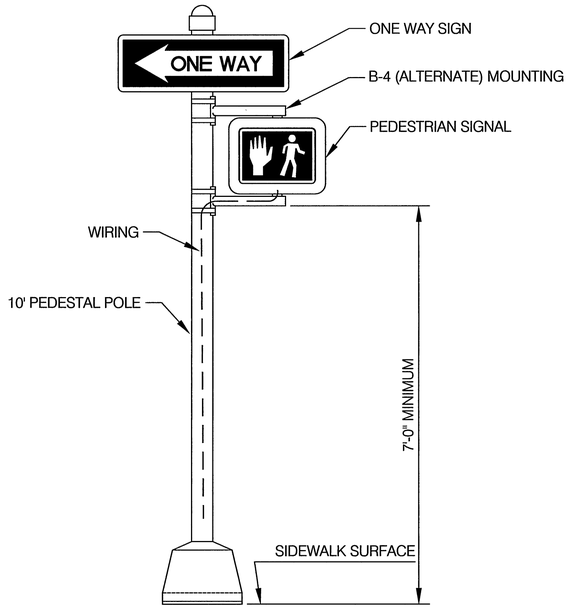

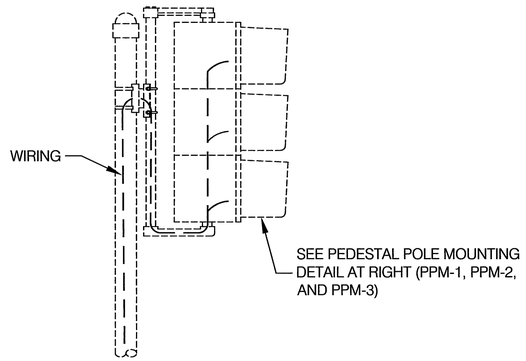

TYPE PPM-3
SIGNAL HEAD WITH
PEDESTRIAN HEADS

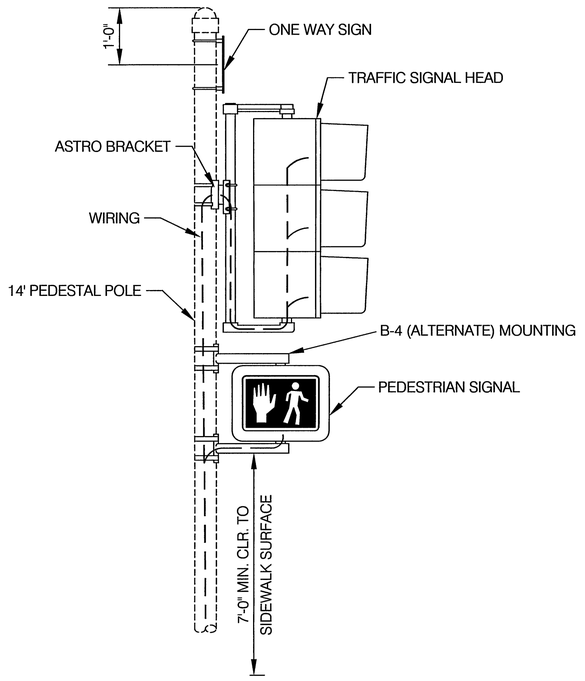

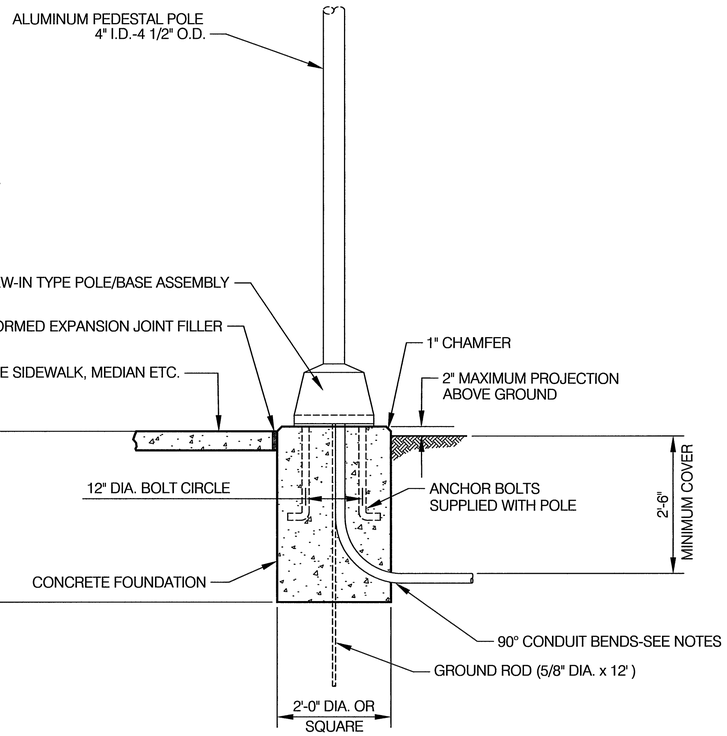

PEDESTAL POLE FOUNDATION

REINFORCING STEEL NOT REQUIRED FOR PEDESTAL POLE FOUNDATION.

NOTES:

1. CONDUIT BENDS SHALL BE 90° WITH 2'-6" MINIMUM GROUND COVER. INSTALL ONE SPARE CONDUIT BEND WITH BOTH ENDS PLUGGED. STANDPIPE CONDUIT SHALL PROJECT 2" MINIMUM ABOVE TOP OF CONCRETE BASE.
2. UNLESS SPECIFIED OTHERWISE, SIGNAL HEADS SHALL BE MOUNTED TO PEDESTAL POLE WITH AN ASTRO BRACKET.
3. BACKPLATES SHALL BE USED AS INDICATED ON THE SIGNAL PLANS.

TRAFFIC ENGINEER

CITY ENGINEER

CITY OF OMAHA PUBLIC WORKS DEPARTMENT

PEDESTAL POLE DETAILS

STANDARD PLATE **6-10**

SHEET 1/1

ISSUE DATE: ..... MARCH 26, 2003

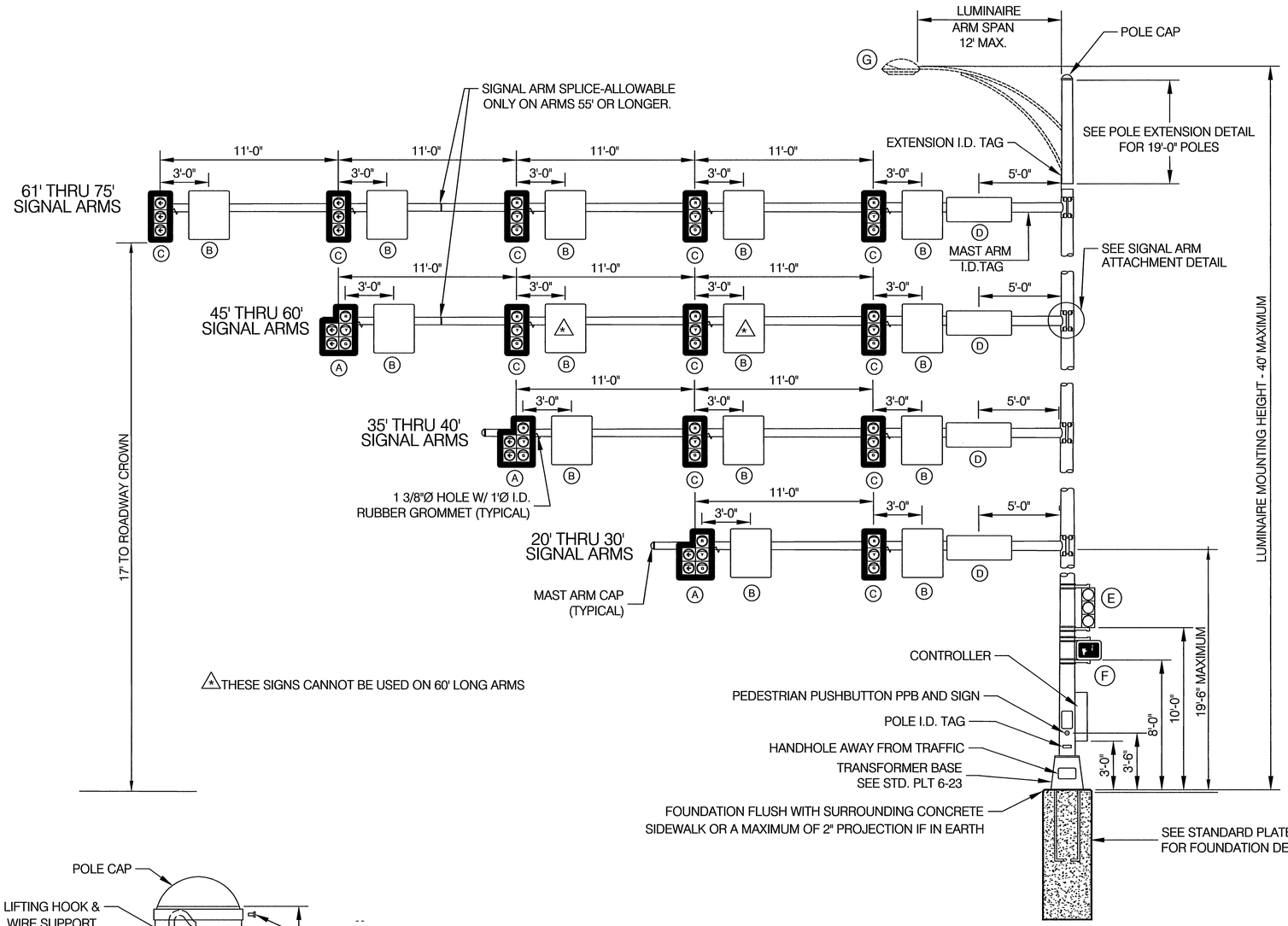

MAST ARM POLE LOADING CHART			
DEVICE	DESCRIPTION	PROJECTING AREA (SQ. FT.)	WEIGHT (LBS.)
A	12" - 5 SEC. SIGNAL WITH BACKPLATES	13.70	116
B	30" x 36" SIGNAL ARM MOUNTED SIGN	7.50	7
C	12" - 3 SEC. SIGNAL WITH BACKPLATES	8.70	60
D	18" x 84" STREET NAME SIGN	10.50	19
E	12" - 3 SEC SIGNAL WITH NO BACKPLATES	4.00	45
F	12" PEDESTRIAN SIGNAL	2.00	25
G	LUMINAIRE ARM	3.3	60

GENERAL NOTES

1. TRAFFIC SIGNAL MAST ARMS AND POLE SHAFTS SHALL BE SUPPLIED WITH 1" I.D. RUBBER GROMMETS FOR CABLE INLETS. SIGNAL MAST ARMS SHALL ALSO BE SUPPLIED WITH 1" RUBBER GROMMETS FOR THE NUMBER OF SIGNALS SPECIFIED. ALL INLET HOLES SHALL BE DRILLED IN THE FIELD BY THE CONTRACTOR.
2. POLE CAPS SHALL BE PROVIDED WITH EACH POLE SHAFT AND SIGNAL MAST ARM.
3. TRANSFORMER BASES SHALL BE PROVIDED WITH EACH POLE SHAFT FOR MAST ARM LENGTHS OF 60' OR LESS. THE TRANSFORMER BASE SHALL HAVE A HAND HOLE WITH A MINIMUM OPENING OF 8" x 13" AND SHALL BE REINFORCED TO MAINTAIN THE FULL STRENGTH OF THE TRANSFORMER BASE.
4. SIGNAL MAST ARMS SHALL HAVE A MAXIMUM RISE OF 5° UNLOADED AND A MINIMUM RISE OF 0° AT THE END OF THE MAST ARM WHEN FULLY LOADED.
5. EACH POLE SHAFT AND SIGNAL ARM SHALL BE FURNISHED WITH ALL MISCELLANEOUS HARDWARE NECESSARY TO COMPLETE ASSEMBLY.
6. ALL MISCELLANEOUS HARDWARE SHALL BE GALVANIZED TO COMPLY WITH ASTM-153 (EXCEPT THREADED FASTNERS UNDER 3/8 INCH DIAMETER).
7. THE POLE SHAFT AND SIGNAL ARM SHALL BE GALVANIZED TO COMPLY WITH ASTM-123. ONLY SINGLE PIECE SIGNAL ARMS ARE ACCEPTABLE FOR ARM LENGTHS LESS THAN 54'.
8. A GROUNDING NUT FOR ACCOMMODATION OF NO. 6 AWG BASE COPPER WIRE SHALL BE PROVIDED ON THE INSIDE OF THE TRANSFORMER BASE.
9. TRAFFIC SIGNAL POLES SHALL BE DESIGNED TO CURRENT AASHTO STANDARDS WITH 80MPH ISOTACH.
10. A MINIMUM 6" GAP SHALL BE LEFT BETWEEN THE EDGE OF THE SIGN AND THE BACKPLATE ON MAST ARM MOUNTED SIGNS.
11. MAST ARM POLES SHALL BE DESIGNED ACCORDING TO THE MAXIMUM LOADING CHART SHOWN ON THIS STANDARD PLATE.
12. ALL COMBINATION MAST ARM POLES SHALL HAVE SERVICE CONDUCTORS PROVIDED IN THE POLE SHAFT AND LUMINAIRE ARM. THE CONTRACTOR SHALL COMPLETE THE INSTALLATION OF THE LUMINAIRES CIRCUIT TO THE DISCONNECT PEDESTAL. FINAL LUMINAIRE TURN ON SHALL BE MADE BY O.P.P.D.

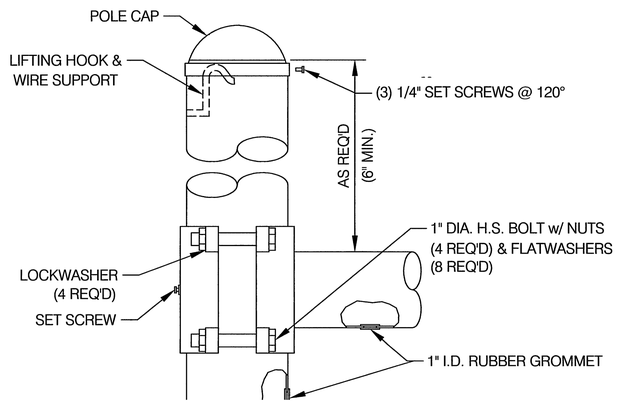

SIGNAL ARM ATTACHMENT

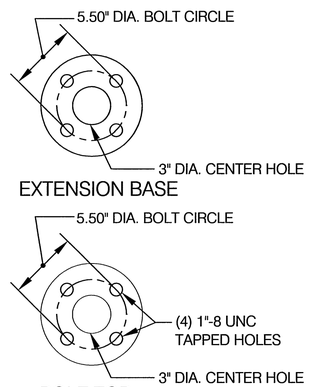

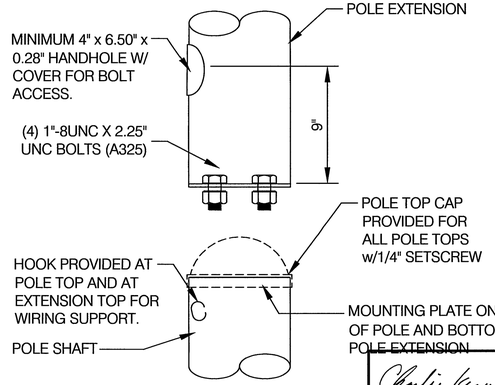

POLE EXTENSION FOR 19'-0" POLES

POLE I.D. TAG

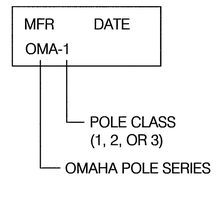

NOTE: TAG LOCATED 6" FROM BASE OF POLE.

MAST ARM I.D. TAG

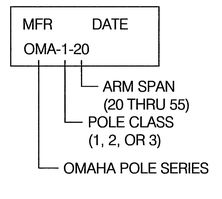

NOTE: TAG LOCATED ON BOTTOM SIDE OF ARM

POLE EXTENSION I.D. TAG

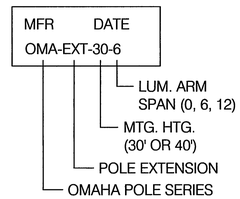

NOTE: TAG LOCATED 6" FROM EXT. BASE, AND 180° FROM HANDHOLD

IDENTIFICATION TAGS

Charlie Krapnik
TRAFFIC ENGINEER
Dennis Kiernan
CITY ENGINEER

CITY OF OMAHA PUBLIC WORKS DEPARTMENT

MAST ARM POLE DETAILS

STANDARD PLATE **6-20** SHEET 1/1

ISSUE DATE: ..... MARCH 26, 2003

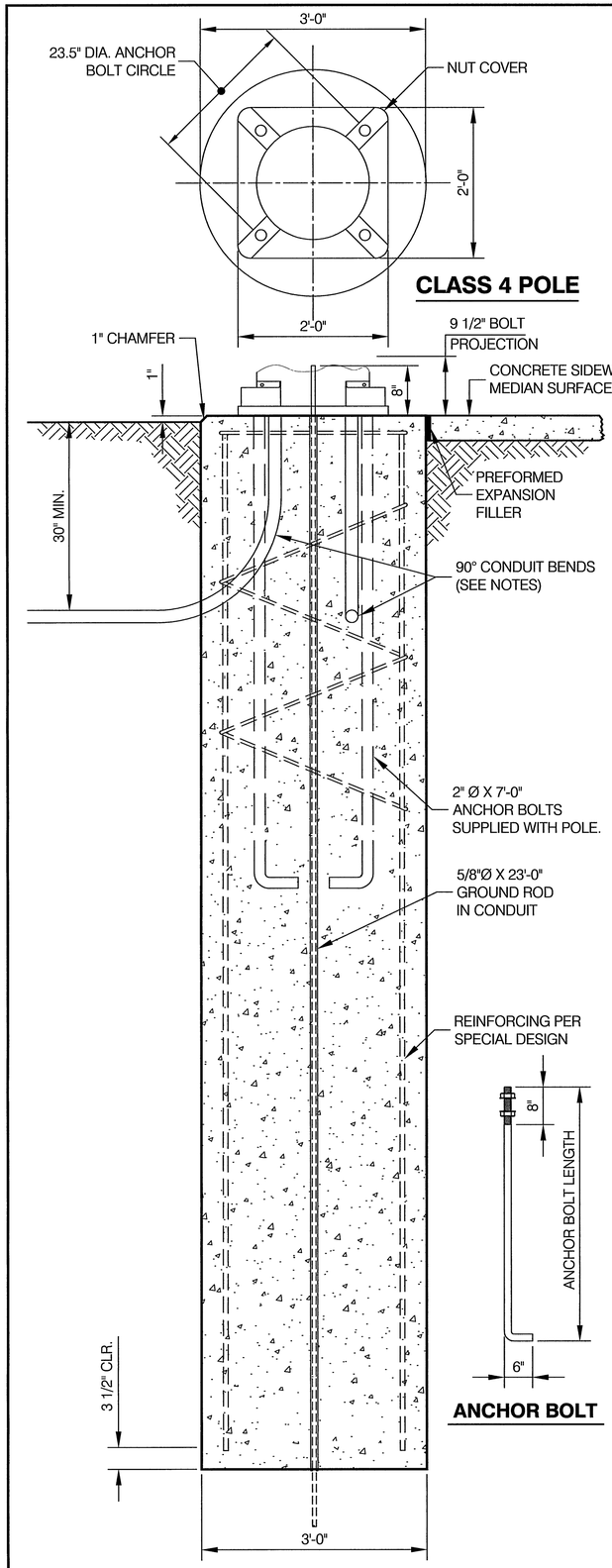

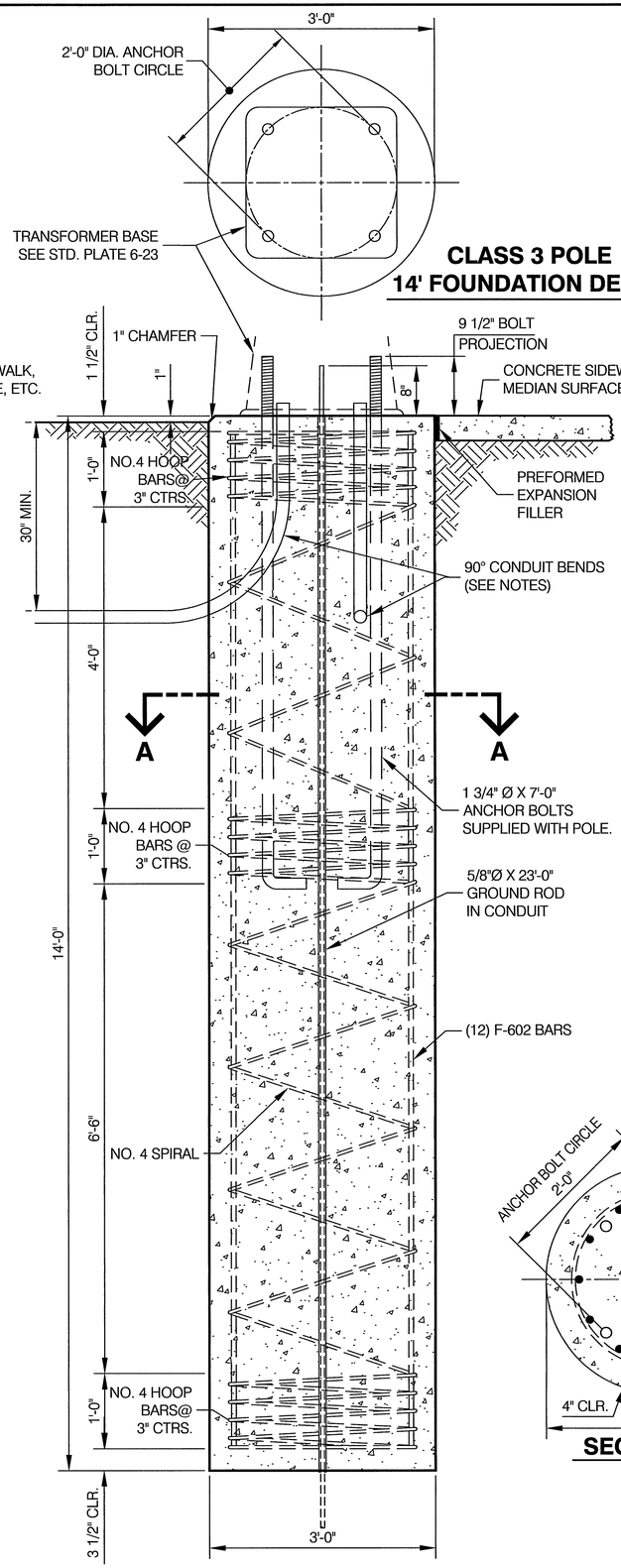

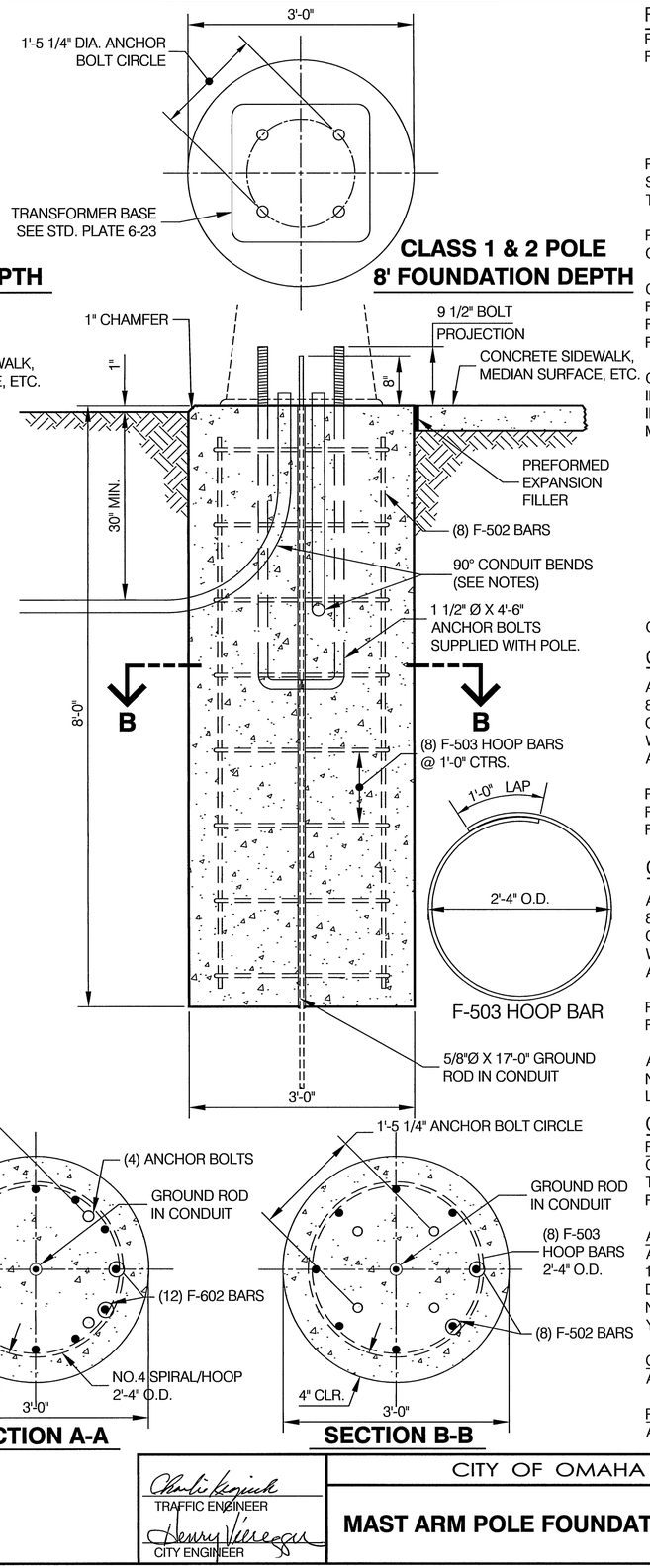

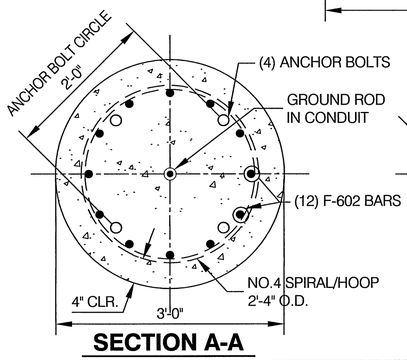

FOUNDATION NOTES ---- ALL CLASSES

POLE FOUNDATION TYPE TO BE USED SHALL BE DETERMINED FROM THE FOLLOWING:

POLE CLASS	MAST-ARM LENGTH	FOUNDATION DEPTH
CLASS 1	20 TO 30 FT.	8 FT. DEPTH
CLASS 2	35 TO 40 FT.	8 FT. DEPTH
CLASS 3	45 TO 60 FT.	14 FT. DEPTH
CLASS 4	61 TO 75 FT.	

POLE FOUNDATIONS SHALL CONFORM TO SECTION 901 OF THE STANDARD SPECIFICATIONS. POLE FOUNDATIONS SHALL BE ROUND. ONLY THE TOP TWO FEET MAY BE FORMED.

PORTLAND CEMENT CONCRETE SHALL CONFORM TO SECTIONS 901 AND 902 OF THE STANDARD SPECIFICATIONS.

GROUND ROD SHALL BE PLACED PRIOR TO CONCRETE PLACEMENT. THE ROD SHALL PROJECT EIGHT INCHES MINIMUM ABOVE TOP OF FINISHED FOUNDATION AND SHALL EXTEND EIGHT FEET MINIMUM BELOW THE FOUNDATION BOTTOM.

CONDUIT BENDS SHALL BE 90 DEGREES. CONDUIT SHALL BE LOCATED 30 INCHES MINIMUM BELOW GROUND LEVEL. SPARE CONDUITS SHALL BE INSTALLED IN EACH FOUNDATION WITH BOTH ENDS PLUGGED AND FREE OF MOISTURE CONFORMING TO THE FOLLOWING:

POLE TYPE	NO. OF SPARE CONDUIT BENDS	CONDUIT SIZE
M.P. OR C.M.P. WITH OR WITHOUT CONTROLLER	* 3	(* 3) 2"

*QUANTITY MAY BE REDUCED TO ONE WHEN STREET LIGHTING CONDUIT IS SHOWN ON CONSTRUCTION PLANS.

CONDUIT SHALL PROJECT 2" ABOVE TOP OF FINISHED FOUNDATION.

CLASS 1 & 2 POLES ---- 8' FOUNDATION DEPTH

ANCHOR BOLTS SHALL BE 1 1/2" DIA. X 4'-6" LONG AS SHOWN WITH THE TOP 8" THREADED. THE TOP 12" MINIMUM SHALL BE GALVANIZED. ANCHOR BOLT CIRCLE SHALL BE 1'-5 1/4" IN DIAMETER. ANCHOR BOLTS SHALL BE SUPPLIED WITH TWO HEX NUTS AND TWO FLAT WASHERS.
ANCHOR BOLTS SHALL BE 50,000 PSI MINIMUM YIELD STRENGTH.

REINFORCING STEEL
F-502 ..... NO. 5 BARS x 7'-4", ... 8 PER FOUNDATION
F-503 ..... NO. 5 HOOP BARS AS SHOWN, 8 PER FOUNDATION

CLASS 3 POLE ---- 14' FOUNDATION DEPTH

ANCHOR BOLTS SHALL BE 1 3/4" DIA. X 7'-0" LONG AS SHOWN WITH THE TOP 8" THREADED. THE TOP 12" MINIMUM SHALL BE GALVANIZED. ANCHOR BOLT CIRCLE SHALL BE 2'-0" IN DIAMETER. ANCHOR BOLTS SHALL BE SUPPLIED WITH TWO HEX NUTS AND TWO FLAT WASHERS.
ANCHOR BOLTS SHALL BE 60,000 PSI MINIMUM YIELD STRENGTH.

REINFORCING STEEL
F-602 ..... NO. 6 BARS x 13'-4", 12 PER FOUNDATION

ALTERNATE REINFORCING:
NO. 4 HOOP BARS, 2'-4" DIAMETER SPACED AT 8" CENTERS MAY BE USED IN LIEU OF THE NO. 4 SPIRAL.

CLASS 4 POLE

FOUNDATION DESIGN
CONTRACTOR SHALL PROVIDE DESIGN FOR ALL ARM LENGTHS LONGER THAN 61'. DESIGN SHALL BE COMPLETED AND STAMPED BY A NEBRASKA REGISTERED PROFESSIONAL ENGINEER.

ANCHOR BOLTS (MAST ARM FOUNDATION ONLY)
ANCHOR BOLTS SHALL BE 2" X 7'-0" AND SHALL BE THREADED. THE TOP 12" MINIMUM SHALL BE GALVANIZED. ANCHOR BOLT CIRCLE SHALL BE 23.5" IN DIAMETER. EACH ANCHOR BOLT SHALL BE SUPPLIED WITH TWO HEXAGONAL NUTS AND TWO FLAT WASHERS. ANCHOR BOLTS SHALL BE 55 KSI MINIMUM YIELD STRENGTH.

CONCRETE
AS SPECIFIED IN THE FOUNDATION DESIGN.

REINFORCING STEEL
AS SPECIFIED IN THE FOUNDATION DESIGN.

TRAFFIC ENGINEER

CITY ENGINEER

CITY OF OMAHA PUBLIC WORKS DEPARTMENT

MAST ARM POLE FOUNDATION DETAILS

STANDARD PLATE 6-22

SHEET 1/1

ISSUE DATE: ..... MARCH 26, 2003

IDENTIFICATION TAG

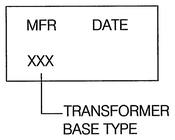

NOTE: I.D.TAG LOCATED ON OPPOSITE SIDE OF BASE FROM DOOR OPENING.

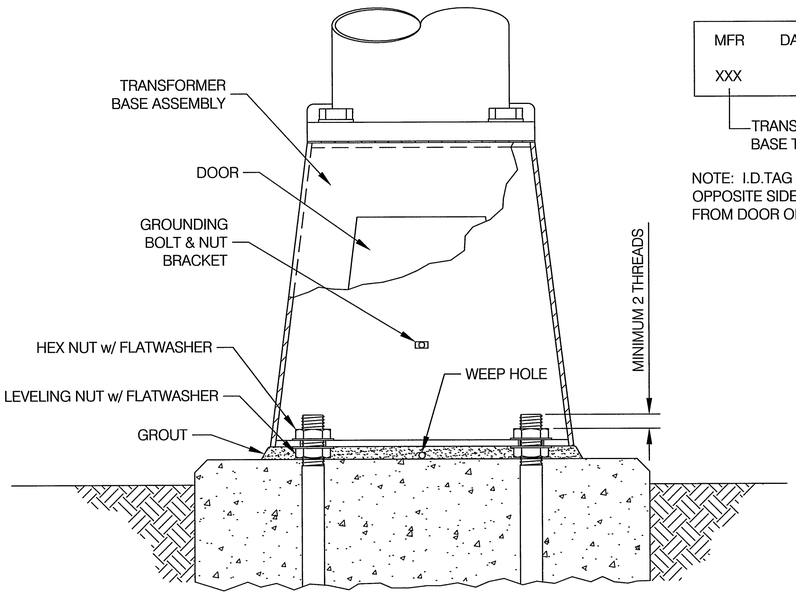

TRANSFORMER BASE ASSEMBLY

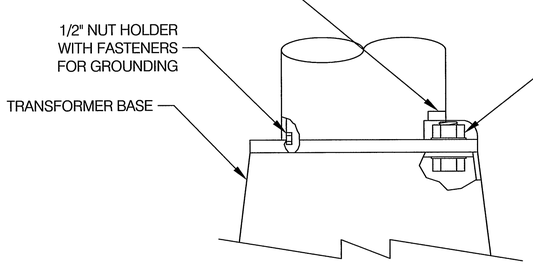

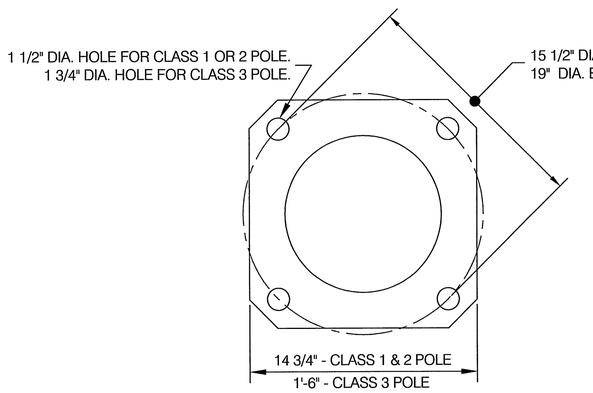

POLE BASE

NOTES

CLASS 1 POLES: 20' TO 30' ARM LENGTH
CLASS 2 POLES: 35' TO 40' ARM LENGTH
CLASS 3 POLES: 45' TO 60' ARM LENGTH

POLE TO TRANSFORMER BASE CONNECTION BOLTS SHALL CONFORM TO ASTM A-325.
LUBRICATE AS REQUIRED.

CLASS 1 & 2 TRANSFORMER BASE

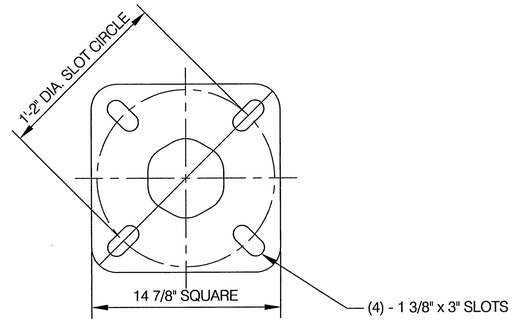

TOP PLAN

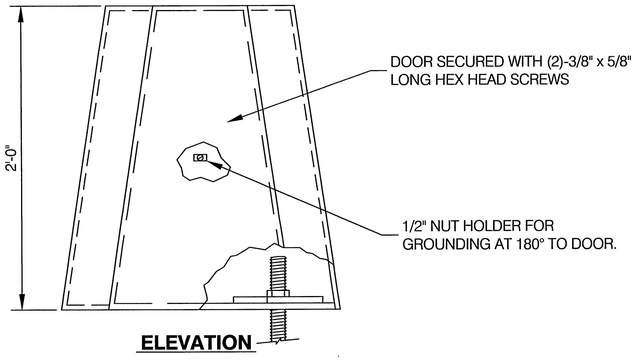

ELEVATION

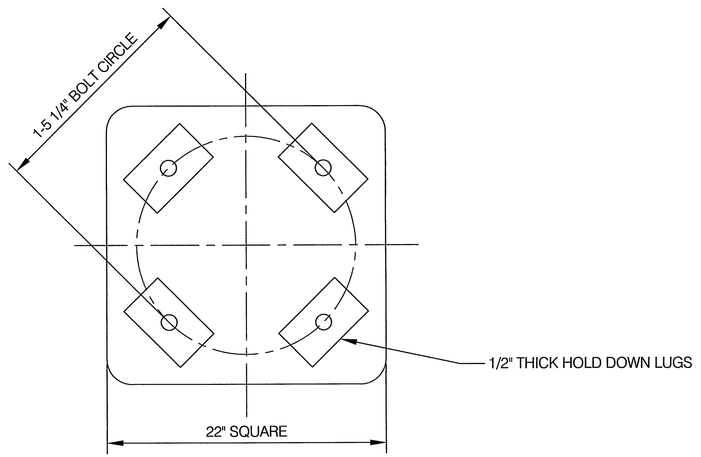

BOTTOM PLAN

CLASS 3 TRANSFORMER BASE

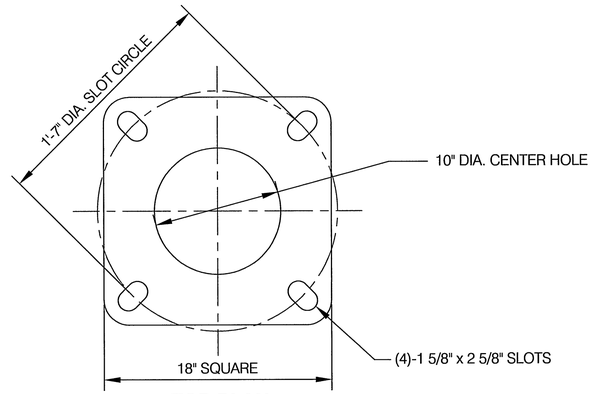

TOP PLAN

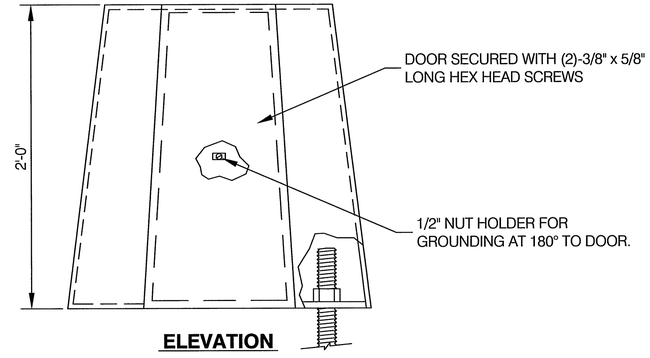

ELEVATION

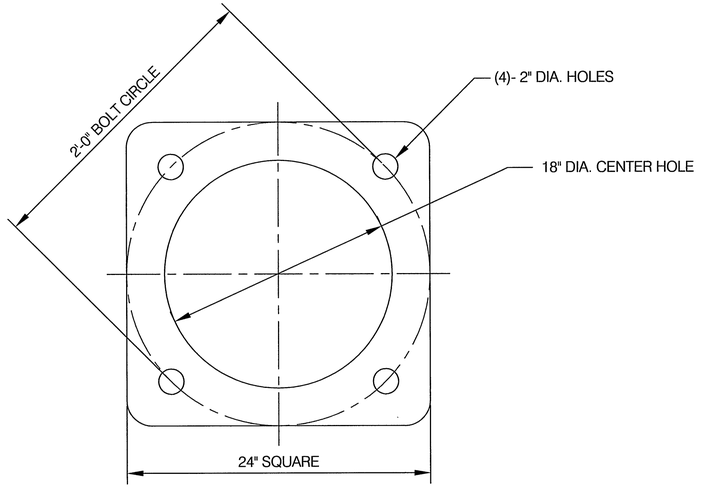

BOTTOM PLAN

TRAFFIC ENGINEER
CITY ENGINEER

CITY OF OMAHA PUBLIC WORKS DEPARTMENT

MAST ARM TRANSFORMER BASE DETAILS

STANDARD PLATE **6-23**

SHEET 1/1

ISSUE DATE: ..... MARCH 26, 2003

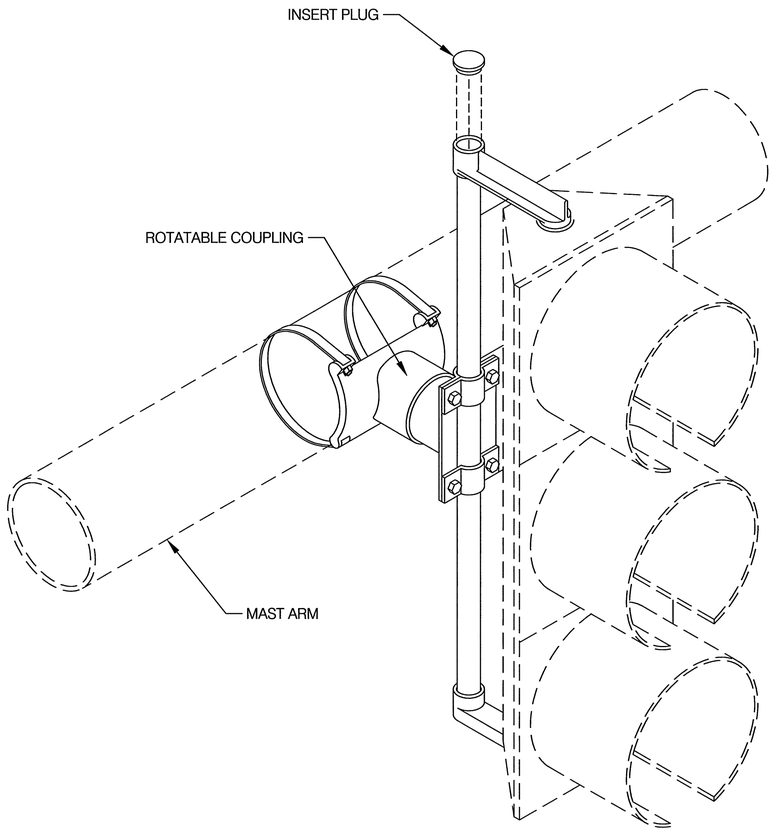

TYPE MA-5
ADJUSTABLE MAST ARM MOUNTING
-- HORIZONTAL OR VERTICAL INSTALATION --

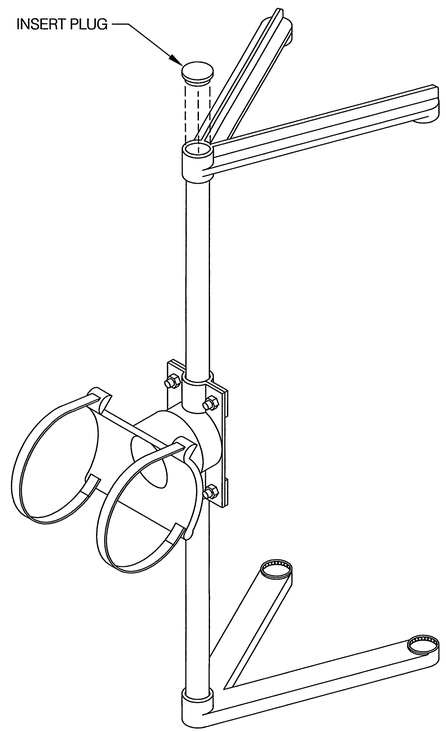

TYPE MA-5-1
SIGNAL MOUNTING HARDWARE

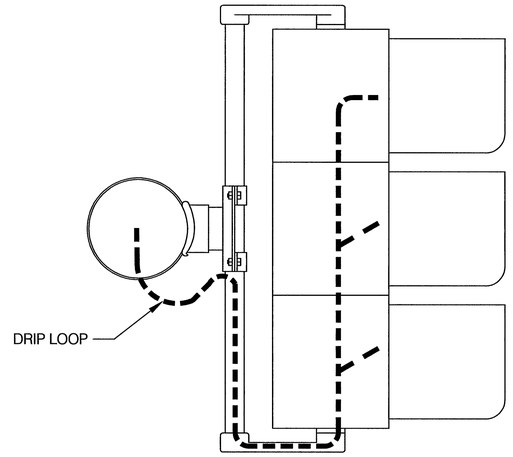

WIRING DIAGRAM

NOTES

1. TRAFFIC SIGNALS SHALL BE INSTALLED IN CONFORMANCE WITH SECTION 903 OF THE STANDARD SPECIFICATIONS.
2. ALL SIGNAL HEADS SHALL BE MOUNTED IN SUCH A MANNER SO THEY MAY BE EASILY REMOVED FROM THEIR SUPPORTING STRUCTURE.
3. UNLESS OTHERWISE SPECIFIED IN THE PLANS, TRAFFIC SIGNAL HEADS SHALL BE MOUNTED AT THE FOLLOWING HEIGHTS MEASURED TO THE BOTTOM OF THE SIGNAL HEAD HOUSING OR BACKPLATE:
   SIGNAL HEADS ABOVE ROADWAY:..... 17'-0"
   SIDE MOUNTED SIGNAL HEADS:.....10'-0"
   PEDESTRIAN SIGNAL HEADS:..... 8'-0"
4. SIGNAL HEADS SHALL BE SECURELY FIXED AND PLUMB TO THEIR RESPECTIVE POSITIONS.

TRAFFIC ENGINEER

CITY ENGINEER

CITY OF OMAHA PUBLIC WORKS DEPARTMENT

MAST ARM SIGNAL MOUNTING

STANDARD PLATE 6-24

SHEET 1/1

ISSUE DATE: ..... MARCH 26, 2003

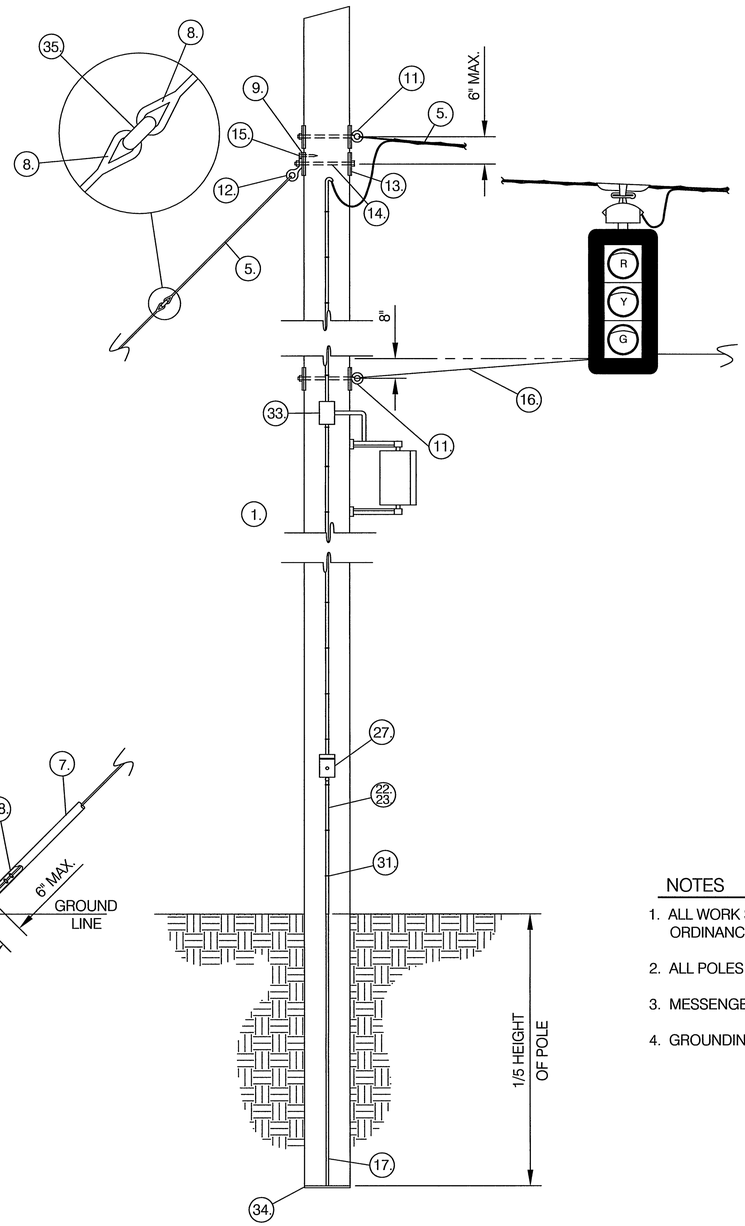

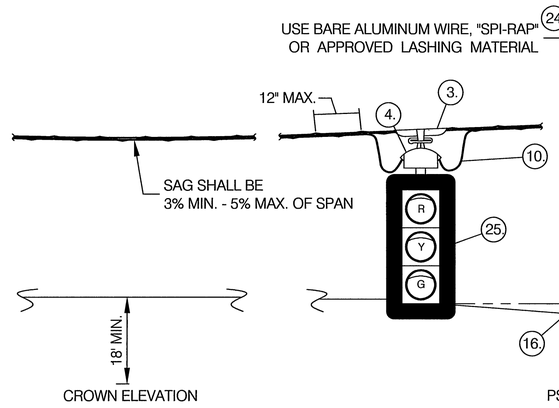

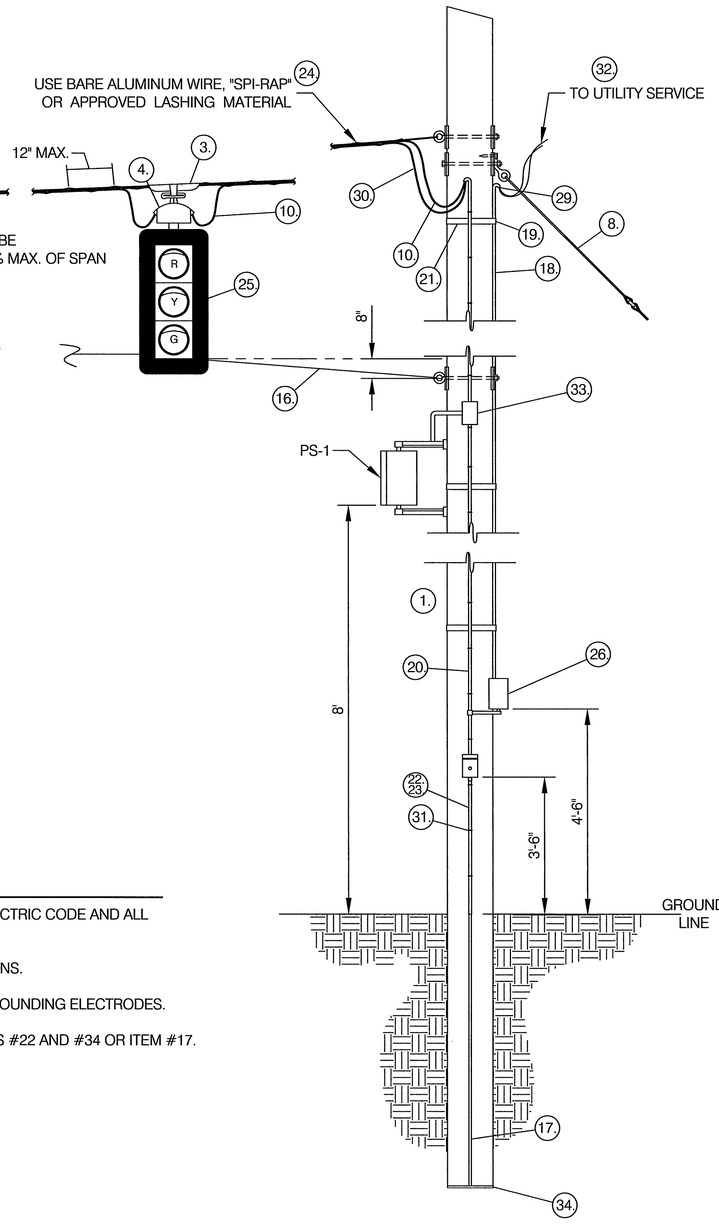

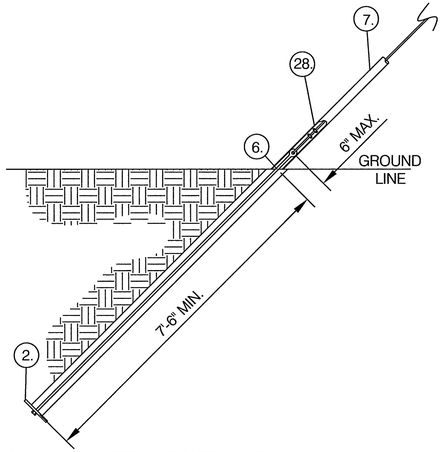

DIG OR BORE HOLE OF AS SMALL A DIAMETER AS PRACTICABLE. AFTER ANCHOR IS IN PLACE BACKFILL SHALL BE PLACED IN LAYERS NOT TO EXCEED 10" IN DEPTH AND THOROUGHLY COMPACTED.

NOTES

1. ALL WORK SHALL CONFORM TO THE NATIONAL ELECTRIC CODE AND ALL ORDINANCES.
2. ALL POLES SHALL BE GUYED AS INDICATED ON PLANS.
3. MESSENGER CABLE SHALL BE BONDED TO THE GROUNDING ELECTRODES.
4. GROUNDING ELECTRODE SHALL CONSIST OF ITEMS #22 AND #34 OR ITEM #17.

LEGEND

ITEM	DESCRIPTION
1.	CLASS 4 BUTT TREATED POLES OR AS SHOWN
2.	8" - 3 WAY ANCHOR
3.	WIRE ROPE SADDLE
4.	12 TERMINAL DISCONNECT HANGER
5.	3/8" HIGH STRENGTH 7 STRAND GUY WIRE
6.	5/8" x 8'-0" MINIMUM THIMBLEYE ANCHOR RODS
7.	8'-0" HALF ROUND GUY GUARD
8.	PREFORMED DEADEND OR STRANDVISE
9.	2 1/2" x 7" x 1/4" LIFT PLATES
10.	DRIP LOOP
11.	3/4" THIMBLEYE BOLT STRAIGHT
12.	ANGLE THIMBLEYE FOR 3/4" BOLT
13.	3" x 3" x 1/4" SQUARE CURVED WASHERS
14.	3/4" MACHINE BOLTS LENGTH AS REQUIRED
15.	1/2" x 4" LAG SCREWS
16.	TETHER CABLE SHALL BE 1/4" SIEMANS MARTIN GRADE
17.	5/8" x 10" COOPERWELD GROUND ROD AND CLAMP (NOMINAL 5/8")
18.	3/4" GALVANIZED CONDUIT CONTAINING UTILITY SERVICE WIRES
19.	1 1/4" GALVANIZED PIPE STRAPS
20.	1 1/2" GALVANIZED CONDUIT CONTAINING SIGNAL CABLES
21.	1 1/2" GALVANIZED PIPE STRAPS
22.	NO. 6 AWG COPPER GROUND WIRE
23.	GROUND WIRE MOLD LENGTH AS REQUIRED
24.	LASHING MATERIAL
25.	TRAFFIC SIGNAL TYPE TS-1 W/T31 FACE
26.	SIGNAL CONTROLLER AND CABINET
27.	PEDESTRIAN PUSHSBUTTON, PPB
28.	PRE-FORMED GUY DEAD END (ALTERNATE)
29.	SERVICE ENTRANCE WITH COVER
30.	600 VOLT NO. 14 AWG 7/C TRAFFIC SIGNAL CABLE
31.	GROUND WIRE STAPLES
32.	POWER SERVICE CABLE #6 AWG COPPER
33.	SPLICE BOX
34.	COPPER PLATE
35.	INSULATOR

TRAFFIC ENGINEER

CITY ENGINEER

CITY OF OMAHA PUBLIC WORKS DEPARTMENT

WOOD POLE SPAN WIRE DETAILS

STANDARD PLATE **6-30** SHEET 1/2

ISSUE DATE: ..... MARCH 26, 2003

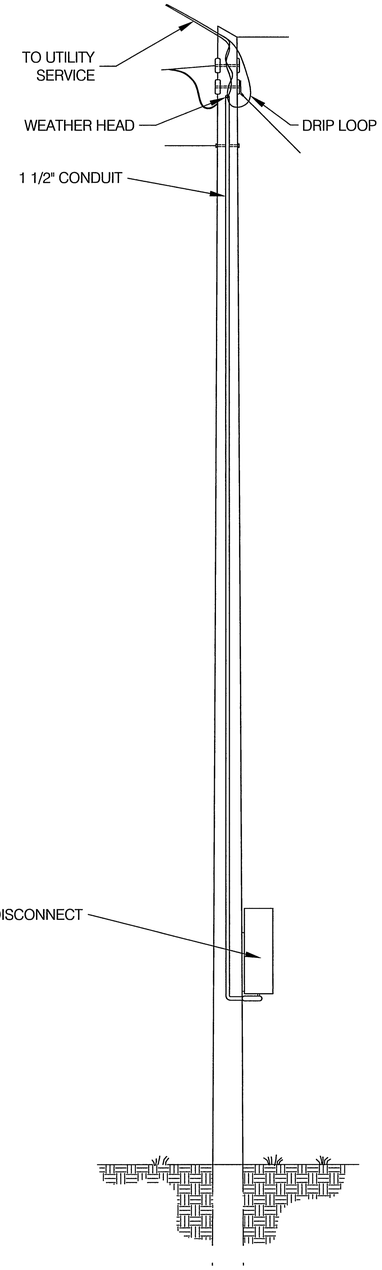

OVERHEAD SERVICE CONNECTION

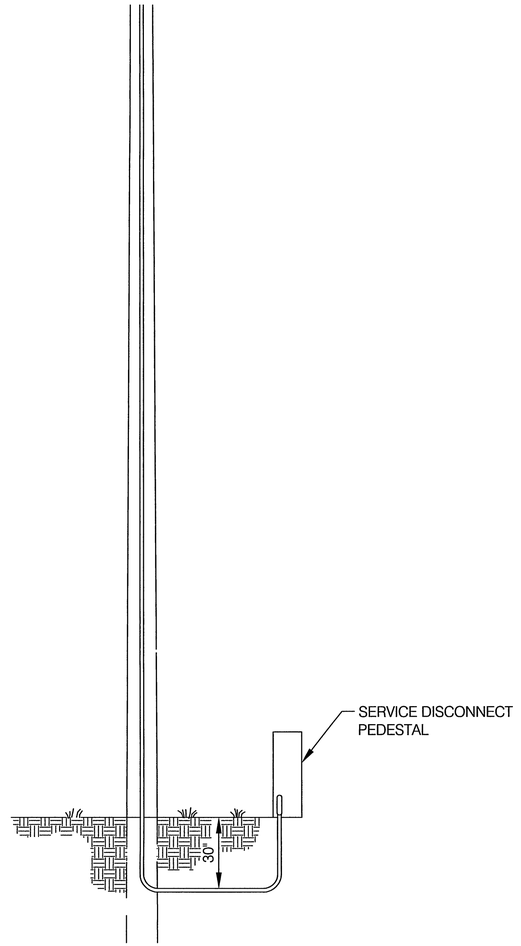

UNDERGROUND SERVICE CONNECTION

NOTES

1. ALL WORK SHALL CONFORM TO THE NATIONAL ELECTRIC CODE AND ALL ORDINANCES.
2. ALL POLES SHALL BE GUYED AS INDICATED ON PLANS.

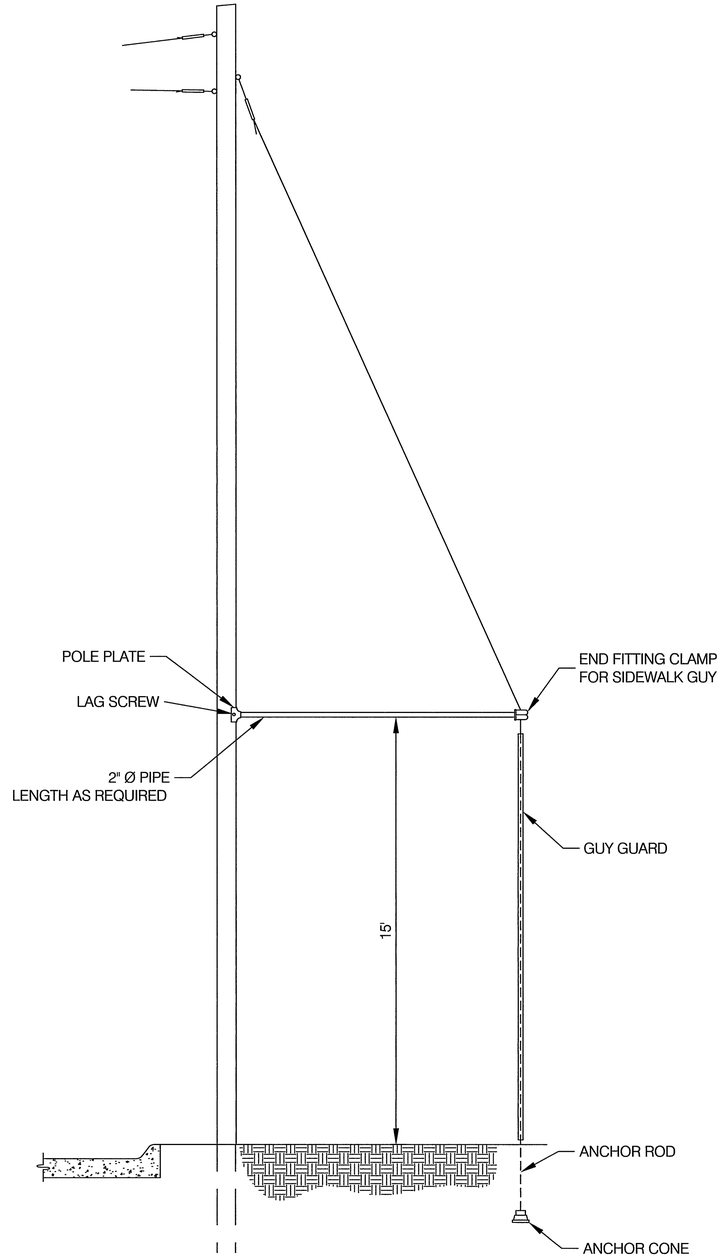

TYPICAL SIDEWALK GUY

TRAFFIC ENGINEER

CITY ENGINEER

CITY OF OMAHA PUBLIC WORKS DEPARTMENT

WOOD POLE SPAN WIRE DETAILS

STANDARD PLATE 6-30

SHEET 2/2

ISSUE DATE: ..... MARCH 26, 2003

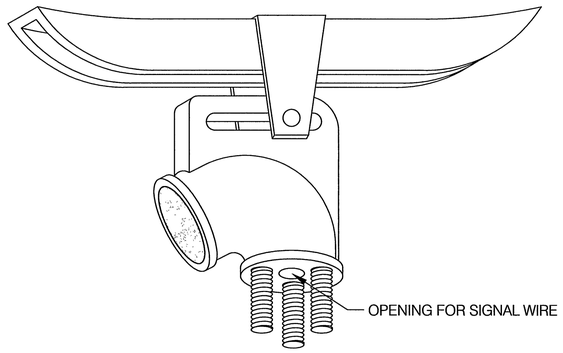

SW - 1
SINGLE ENTRANCE HANGER

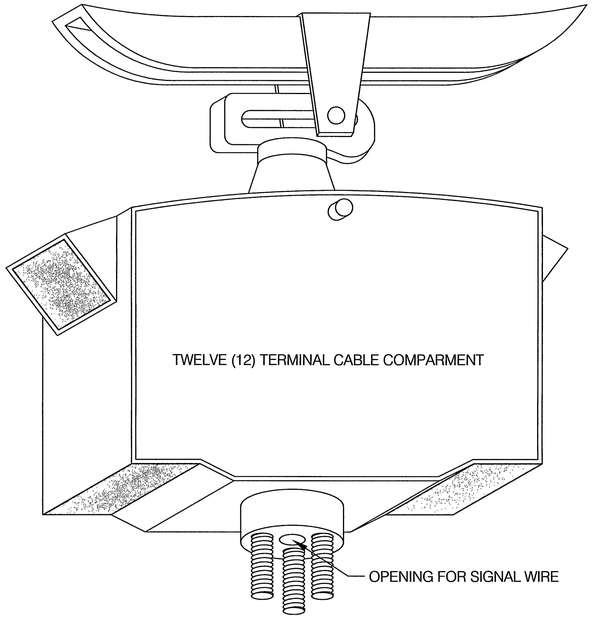

SW-3
DISCONNECT HANGER

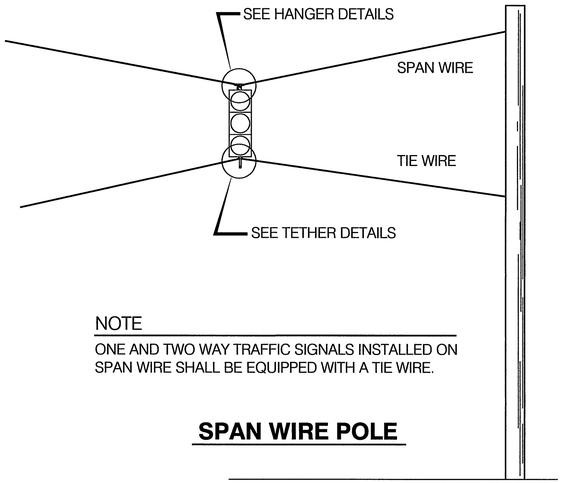

NOTE
ONE AND TWO WAY TRAFFIC SIGNALS INSTALLED ON SPAN WIRE SHALL BE EQUIPPED WITH A TIE WIRE.

SPAN WIRE POLE

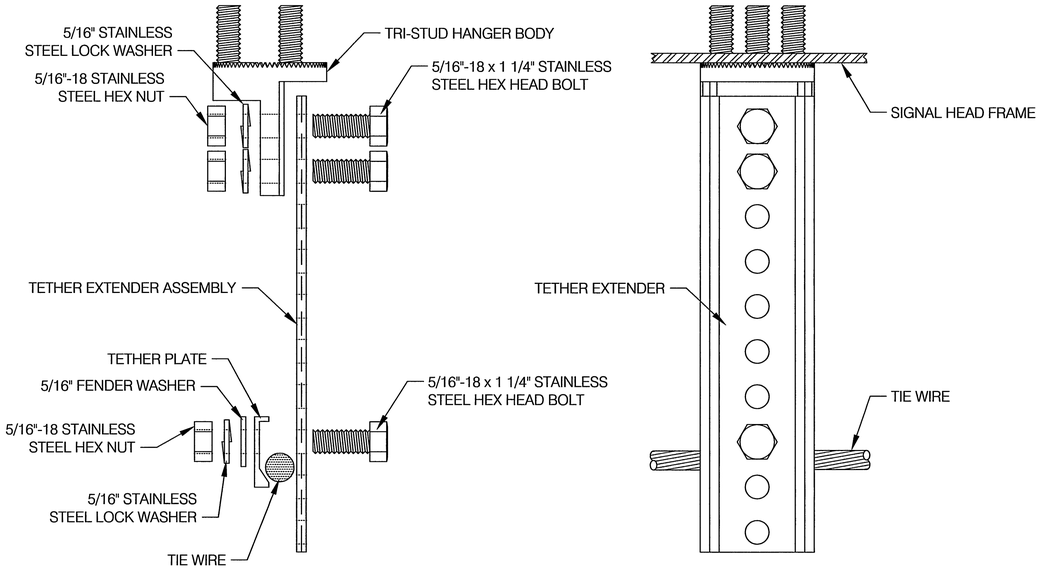

END VIEW **FRONT VIEW**

TETHER ASSEMBLY DETAIL WITH EXTENDER

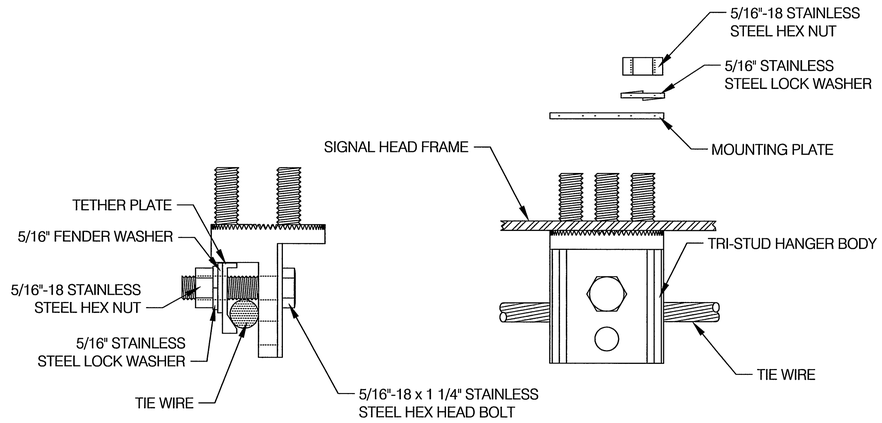

END VIEW **FRONT VIEW**

TETHER ASSEMBLY DETAIL

Charlie Kraguik TRAFFIC ENGINEER Henry Vieregger CITY ENGINEER	CITY OF OMAHA PUBLIC WORKS DEPARTMENT **SPAN WIRE MOUNTING DETAILS**	**STANDARD PLATE** **6-32**	SHEET 1/1
		ISSUE DATE: ..... MARCH 26, 2003	

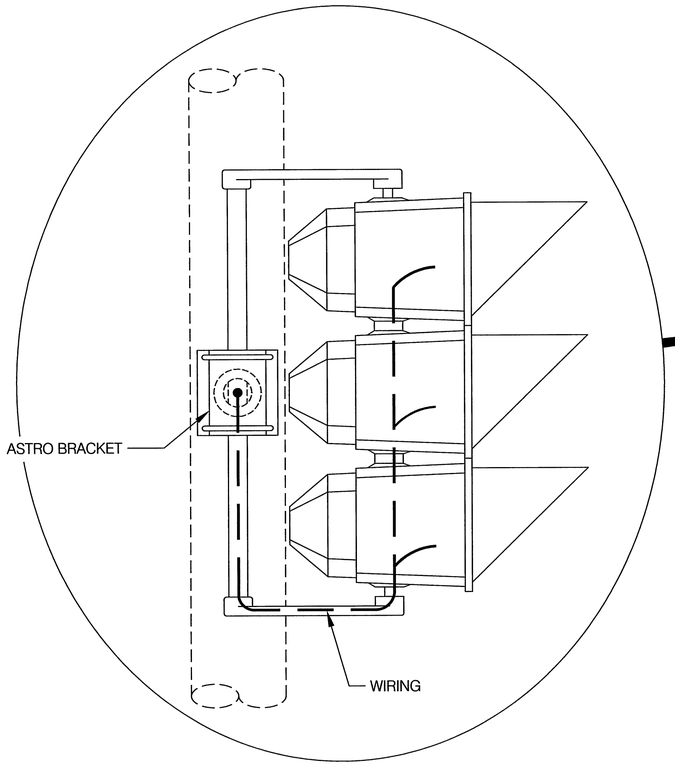

B - 5 MOUNTING
FOR SIDE MOUNT OPTICALLY
PROGRAMMED SIGNAL HEADS

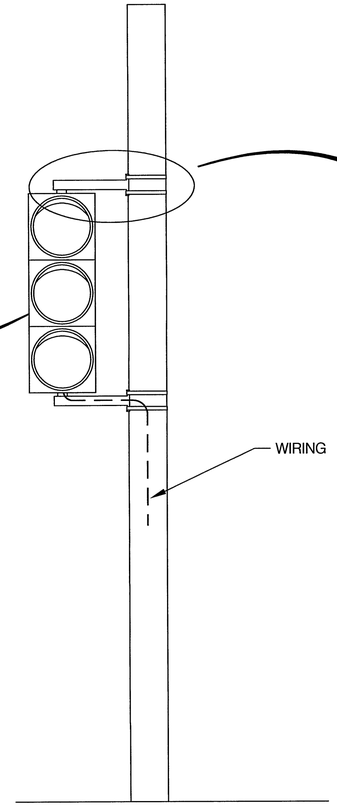

CABLE GROMMET NEEDED
ON ENTRANCE BRACKET ONLY.

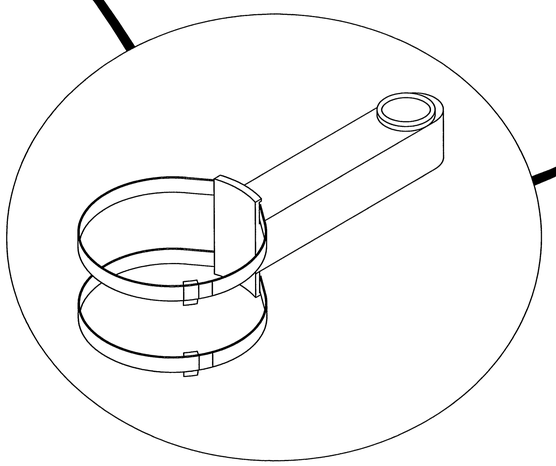

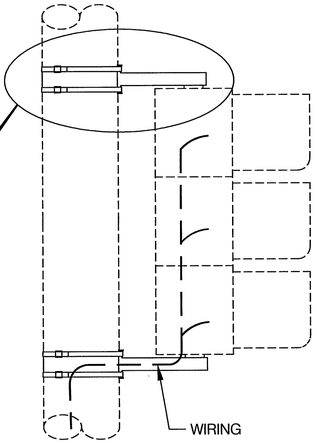

B - 4 ALTERNATE MOUNTING

TRAFFIC ENGINEER

CITY ENGINEER

CITY OF OMAHA PUBLIC WORKS DEPARTMENT

POLE BRACKET INSTALLATION DETAILS

STANDARD PLATE 6-40

SHEET 1/1

ISSUE DATE: ..... MARCH 26, 2003

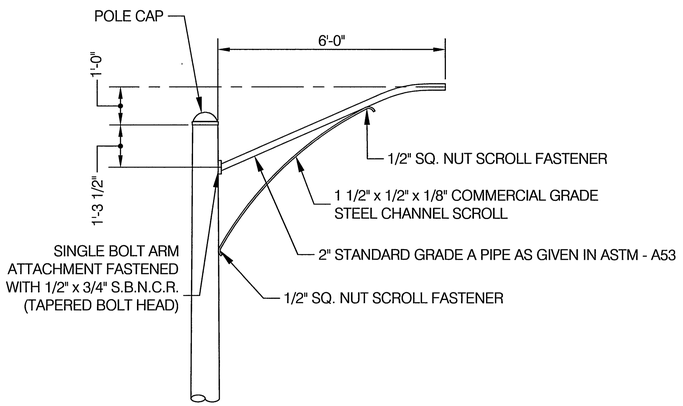

6'-0" LUMINAIRE ARM

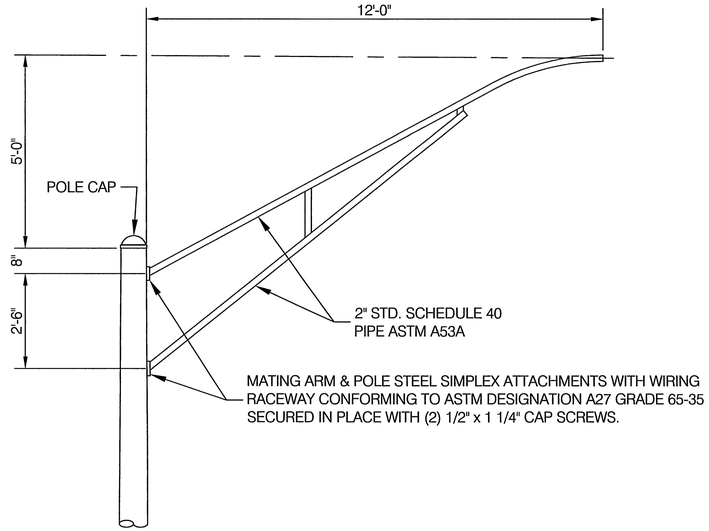

12'-0" LUMINAIRE ARM

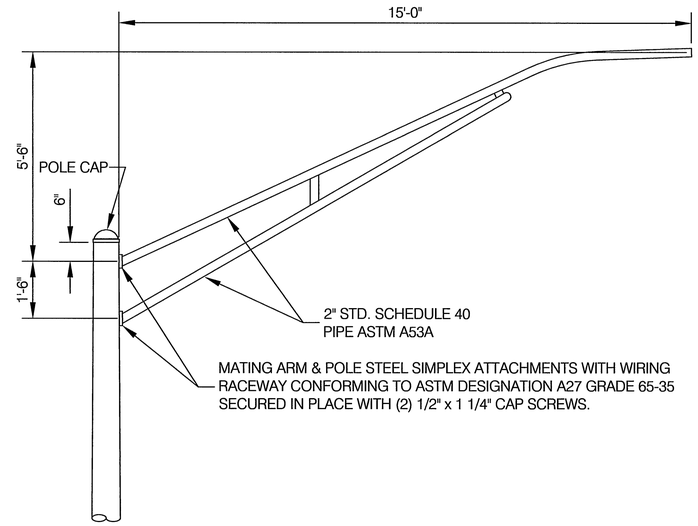

15'-0" LUMINAIRE ARM

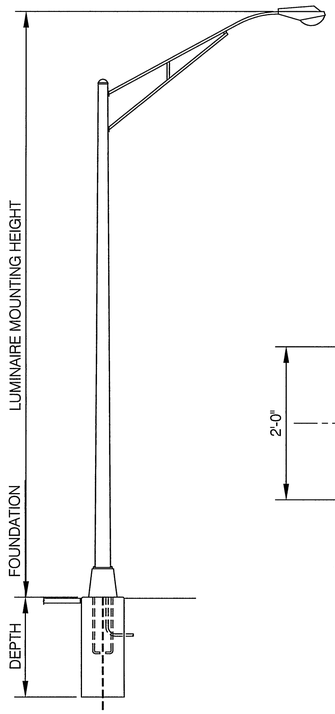

LIGHT POLE ELEVATION

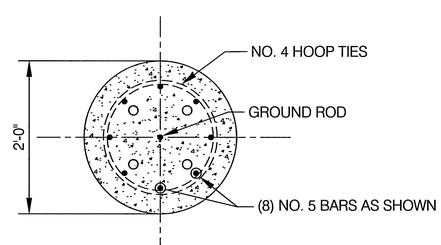

SECTION A - A

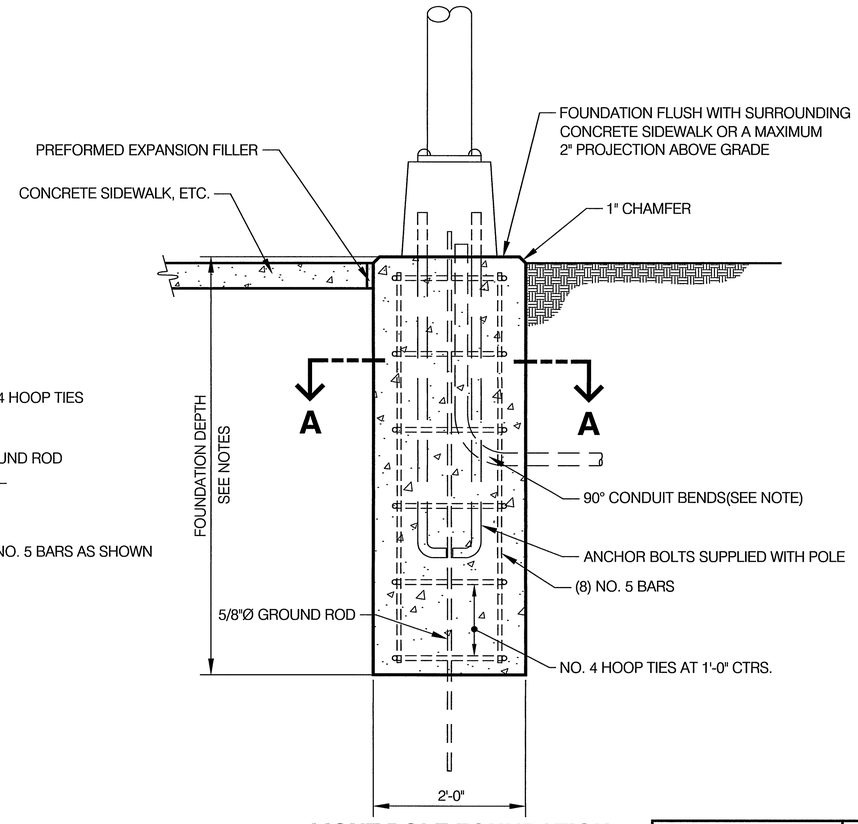

LIGHT POLE FOUNDATION

NOTES

1. POLE FOUNDATIONS SHALL CONFORM TO SECTION 903 OF THE STANDARD SPECIFICATIONS. FOUNDATIONS SHALL BE ROUND AND ONLY THE TOP TWO FEET MAY BE FORMED.
2. THE FOUNDATION DEPTH SHALL BE DETERMINED FROM THE FOLLOWING TABLE:

LUMINIARE HEIGHT	FOUNDATION DEPTH
25'-0"	4'-0"
30'-0"	5'-6"
40'-0"	7'-0"

3. CONDUIT BENDS SHALL BE 90°. THEY SHALL BE LOCATED 30 INCHES MINIMUM BELOW GROUND LEVEL. THERE SHALL BE A MINIMUM OF ONE SPARE CONDUIT BEND INSTALLED IN EACH FOUNDATION WITH BOTH ENDS PLUGGED AND FREE OF DEBRIS AND MOISTURE. STAND PIPE CONDUIT SHALL PROJECT 2 INCHES MINIMUM ABOVE TOP OF FINISHED FOUNDATION.
4. GROUND ROD SHALL BE PLACED PRIOR TO CONCRETE PLACEMENT. THE ROD SHALL PROJECT EIGHT INCHES MINIMUM ABOVE THE TOP OF THE FINISHED FOUNDATION AND EXTEND FIVE FEET MINIMUM BELOW THE BOTTOM OF THE FOUNDATION.

Charlie Krapicki TRAFFIC ENGINEER Henry Vieregge CITY ENGINEER	CITY OF OMAHA PUBLIC WORKS DEPARTMENT **STREET LIGHT POLE DETAILS**	**STANDARD PLATE 6-50**	SHEET 1/1
		ISSUE DATE: ..... MARCH 26, 2003	

T11

T12

T21

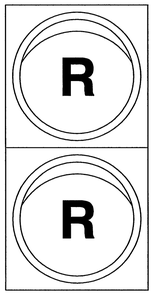

T22

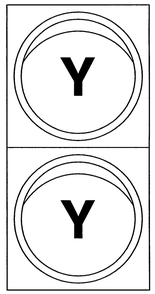

T31

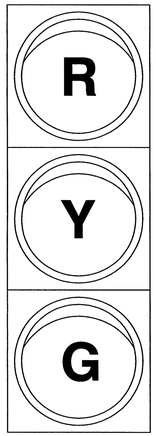

TS-1

T32

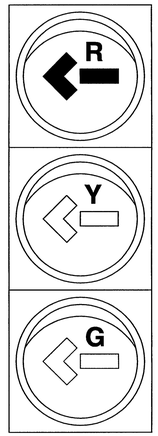

TS-1L

T33

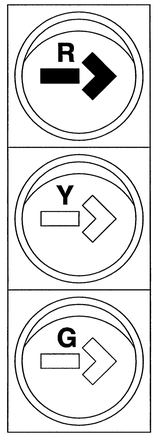

TS-1R

T34L

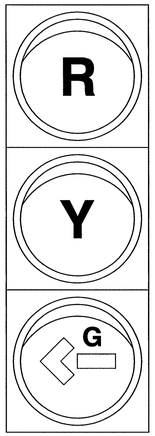

T34S

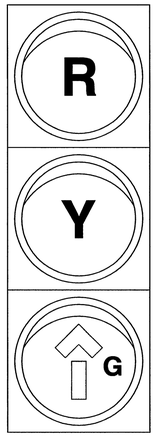

T34R

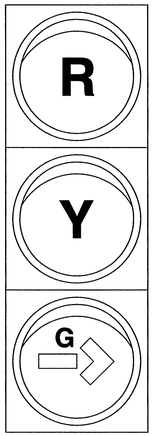

T23

PS-1

T41

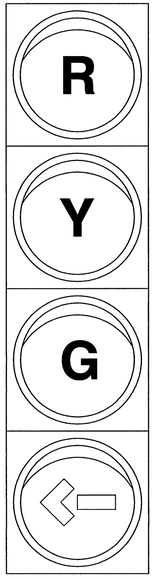

TS-1LB

T42

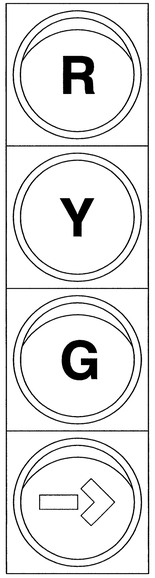

TS-1RB

T51

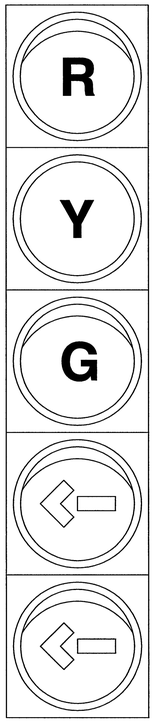

TS-1LL

T51A

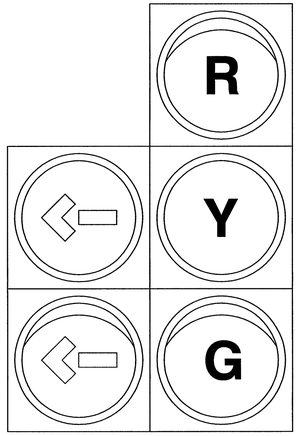

TS-1LL

T52

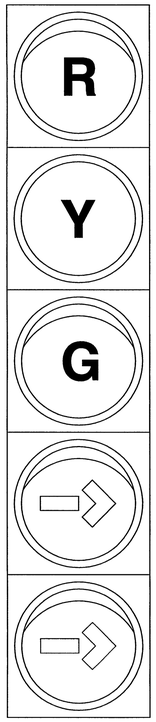

TS-1RR

T52A

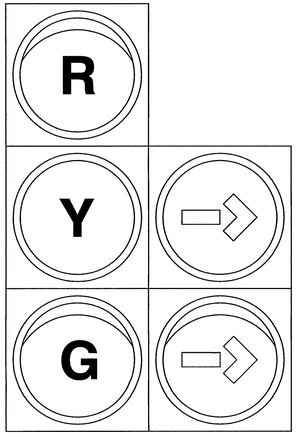

TS-1RR

SIGNAL FACE NOTATION KEY

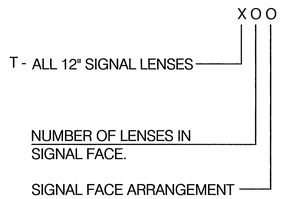

BID ITEMS

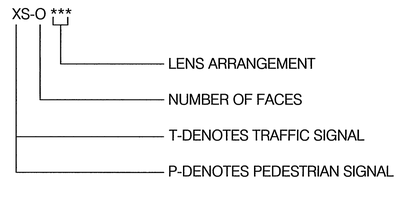

TRAFFIC ENGINEER

CITY ENGINEER

CITY OF OMAHA PUBLIC WORKS DEPARTMENT

STANDARD SIGNAL FACE ARRANGEMENTS

STANDARD PLATE 6-60

SHEET 1/1

ISSUE DATE: ..... MARCH 26, 2003

EXISTING PAVEMENT INSTALLATION

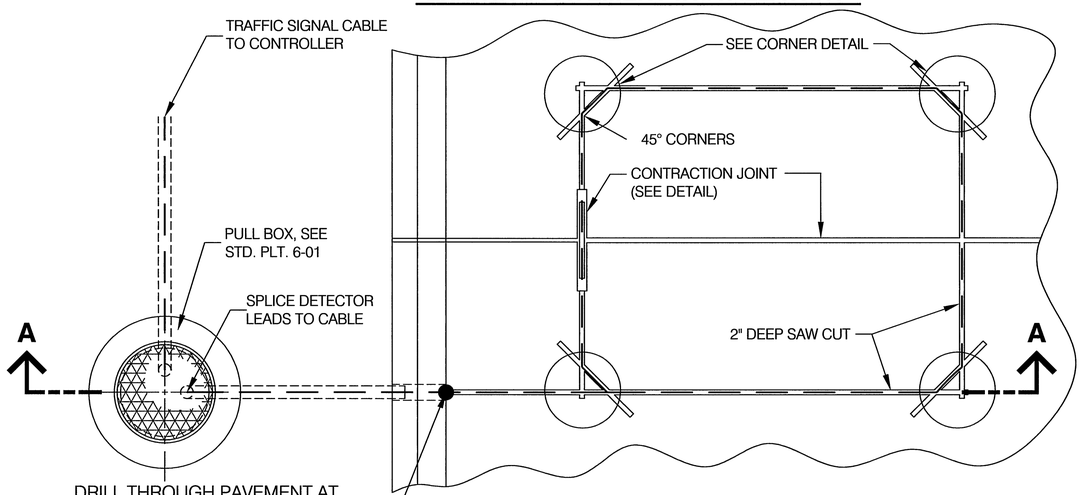

DETECTOR PLAN

NEW PAVEMENT INSTALLATION

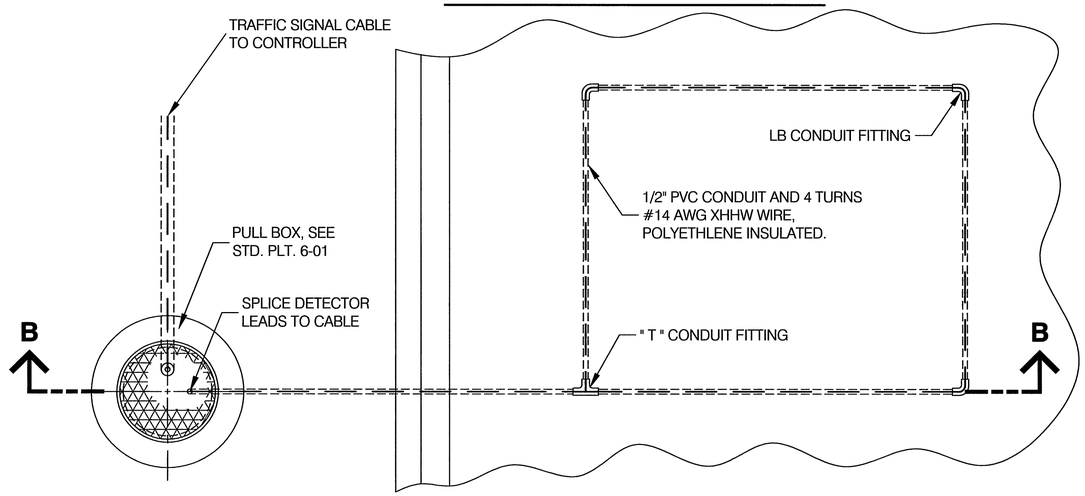

DETECTOR PLAN

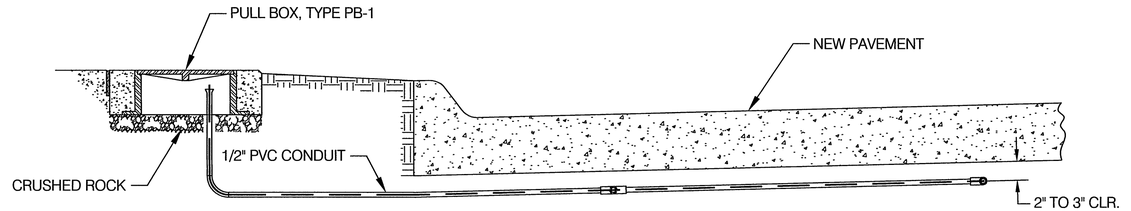

SECTION "B - B"

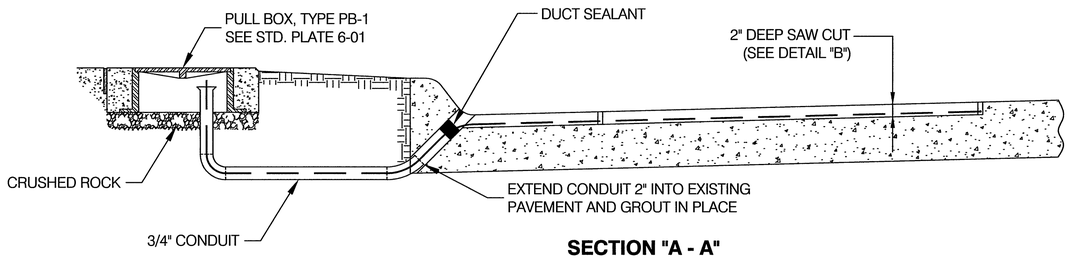

SECTION "A - A"

NOTES:

1. CRACK FILLER SHALL BE 3M LOOP SEALANT OR EQUIVALENT.
2. FINISHED LOOP SHALL SHOW NO SHORTED TURNS, NO BROKEN WIRE AND 5MEG OHMS (MINIMUM) TO GROUND, MEASURED, WITH SIMPSON 260 VOLT OHMETER OR EQUIVALENT.
3. PVC CONDUIT SHALL BE SCHEDULE 40 PIPE. INSTALL COMPLETE LOOP (CONDUIT AND WIRE) JUST PRIOR TO CONCRETE PLACEMENT. USE EXTREME CARE DURING CONSTRUCTION TO ELIMINATE DAMAGE TO LOOP.
4. SAW CUT, WIRE PLACEMENT AND SEALING PRIOR TO OPENING TO TRAFFIC.

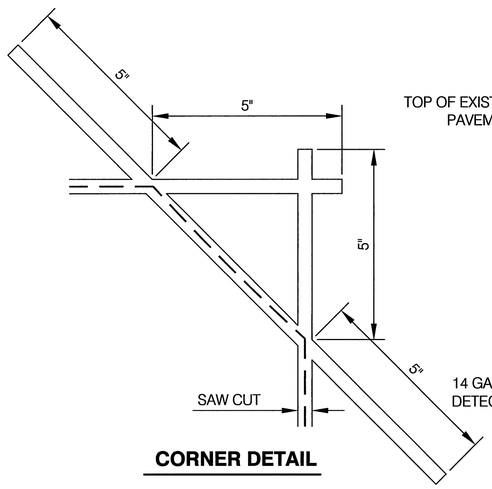

CORNER DETAIL

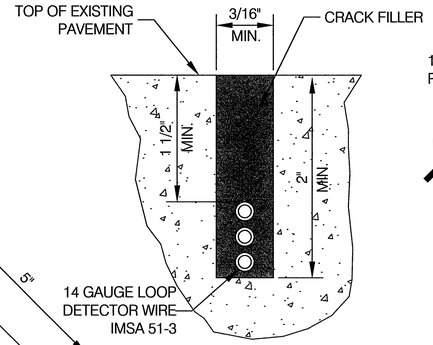

SAW CUT DETAIL
DETAIL B

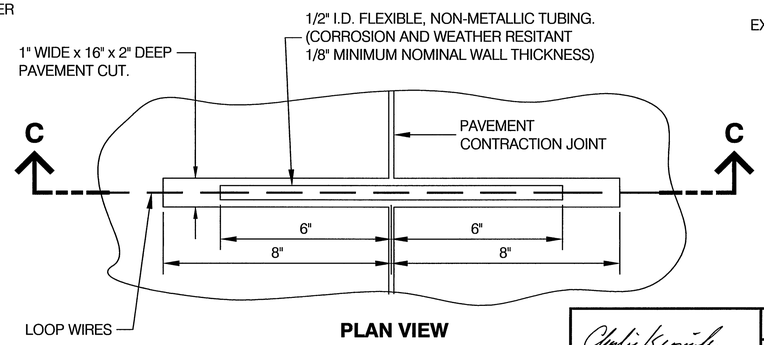

PLAN VIEW

DETAILS AT CONTRACTION JOINT

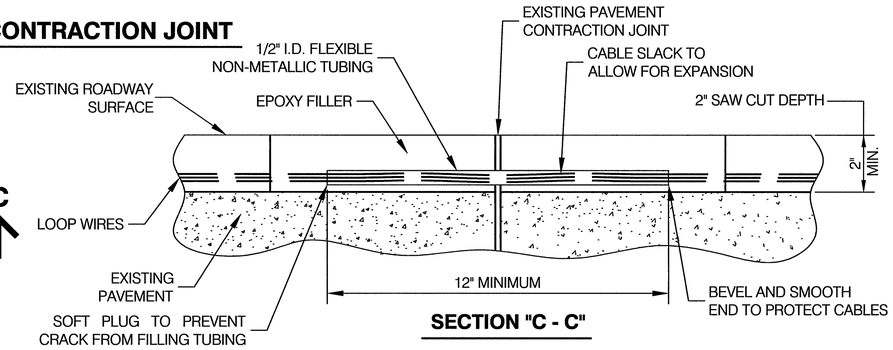

SECTION "C - C"

TRAFFIC ENGINEER

CITY ENGINEER

CITY OF OMAHA PUBLIC WORKS DEPARTMENT

INDUCTIVE LOOP DETECTORS

STANDARD PLATE **6-70**

SHEET 1 / 1

ISSUE DATE: ..... MARCH 26, 2003

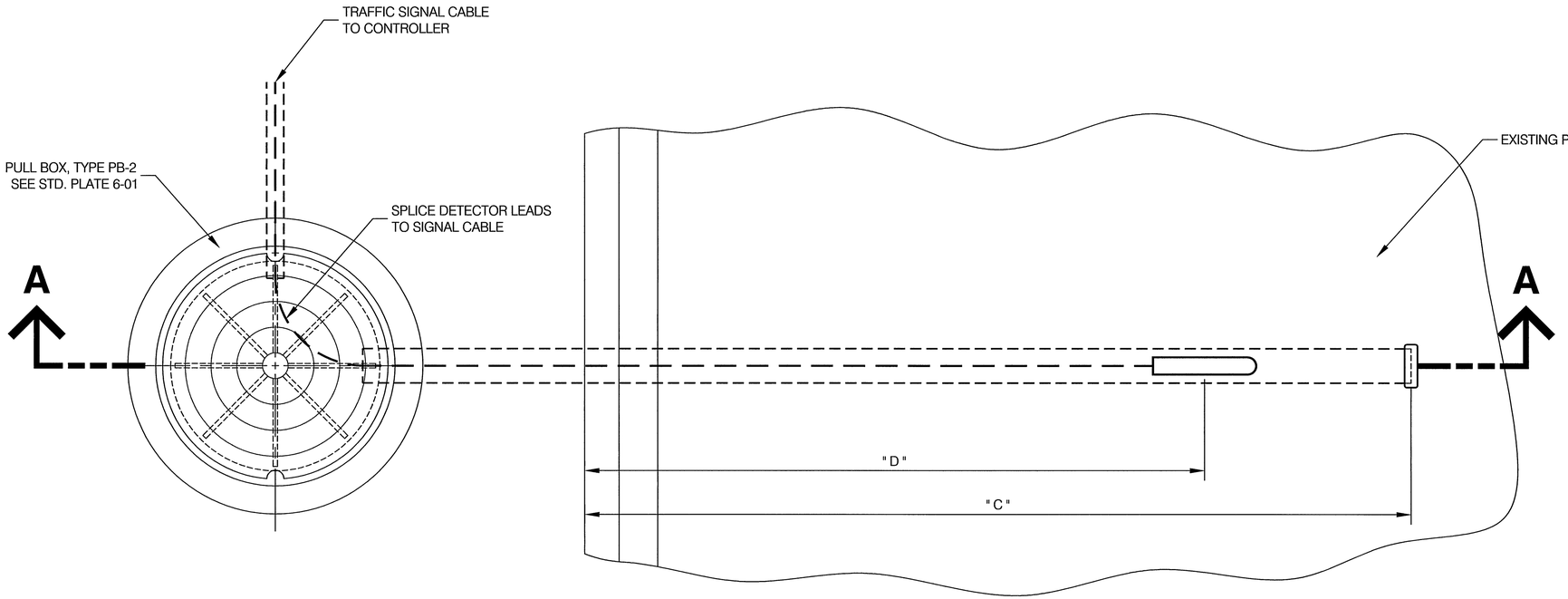

DETECTOR PLAN

NOTE

1. DIMENSIONS "D" AND "C" SHALL BE AS SHOWN ON CONSTRUCTION PLANS.

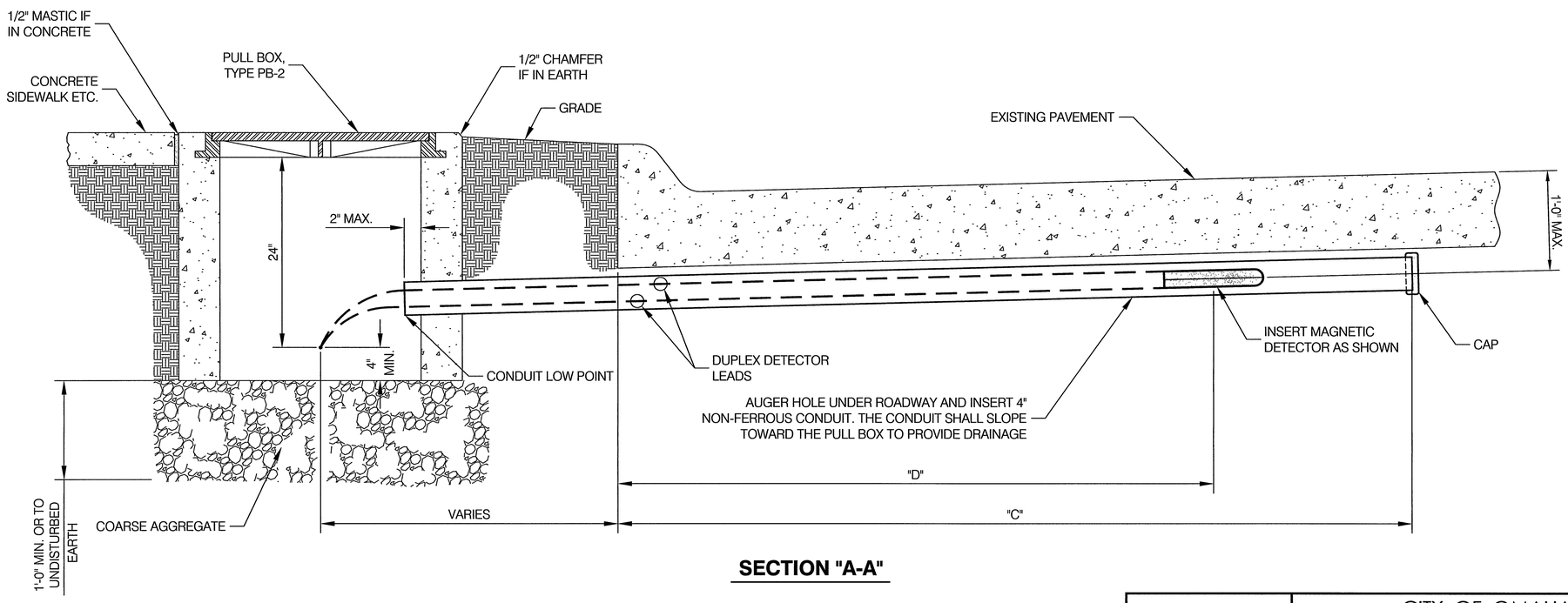

SECTION "A-A"

TRAFFIC ENGINEER

CITY ENGINEER

CITY OF OMAHA PUBLIC WORKS DEPARTMENT

MAGNETIC DETECTOR INSTALLATION DETAIL

STANDARD PLATE 6-72 SHEET 1/1

ISSUE DATE: ..... MARCH 26, 2003

TWO-PHASE INSTALLATIONS

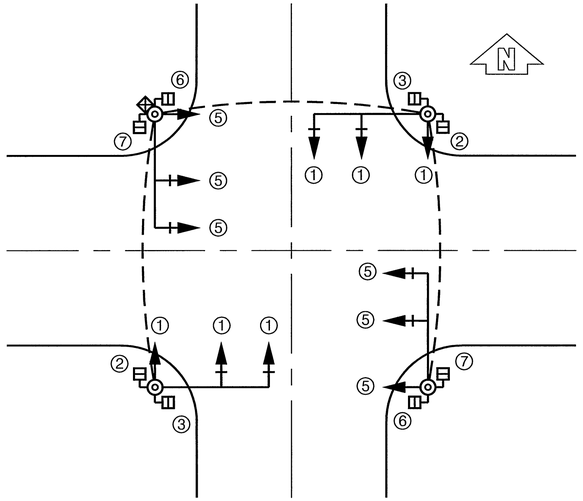

MAST ARM POLES ON THE NE & SW CORNERS

WIRE COLOR	TRACER	SIGNAL NO.	FUNCTION
GREEN		1	GREEN
ORANGE		1	YELLOW
RED		1	RED
GREEN	BLACK		SPARE
ORANGE	BLACK		SPARE
RED	BLACK		SPARE
GREEN	WHITE	2	N.S. WALK
RED	WHITE	2	N.S. DON'T WALK
BLUE	WHITE	3	E.W. WALK
BLACK	WHITE	3	E.W. DON'T WALK
BLUE			SPARE
WHITE	BLACK		SPARE
BLACK			SPARE
BLUE	BLACK		SPARE
BLACK	RED		COMMON WHITE TAG
WHITE			COMMON

MAST ARM POLES ON THE NW & SE CORNERS

WIRE COLOR	TRACER	SIGNAL NO.	FUNCTION
GREEN			SPARE
ORANGE			SPARE
RED			SPARE
GREEN	BLACK		SPARE
ORANGE	BLACK		SPARE
RED	BLACK		SPARE
GREEN	WHITE	7	N.S. WALK
RED	WHITE	7	N.S. DON'T WALK
BLUE	WHITE	6	E.W. WALK
BLACK	WHITE	6	E.W. DON'T WALK
BLUE		5	GREEN
WHITE	BLACK	5	YELLOW
BLACK		5	RED
BLUE	BLACK		SPARE
BLACK	RED		COMMON WHITE TAG
WHITE			COMMON

COMM CABLE

WIRE COLOR	FUNCTION
RED	TRANSMIT
BLUE	TRANSMIT
GREEN	RECEIVE
WHITE	RECEIVE
ORANGE	SPARES
WHITE	SPARES
GREY	SPARES
WHITE	SPARES
BLUE	SPARES
WHITE	SPARES
BROWN	SPARES
WHITE	SPARES

3 TO 8 PHASE INSTALLATIONS

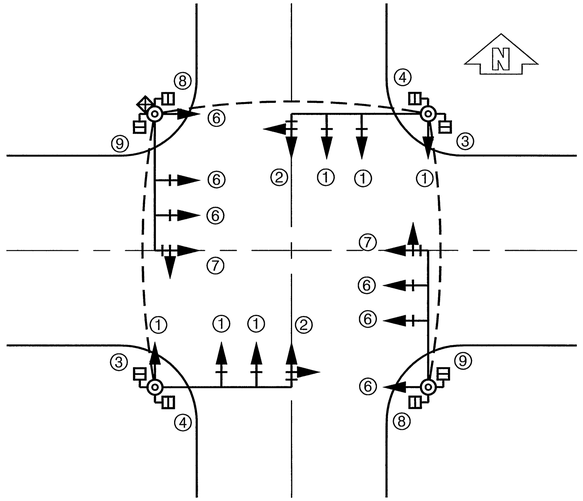

MAST ARM POLES ON THE NE & SW CORNERS

WIRE COLOR	TRACER	SIGNAL NO.	FUNCTION
GREEN		1 & 2	GREEN
ORANGE		1 & 2	YELLOW
RED		1 & 2	RED
GREEN	BLACK	2	GREEN ARROW
ORANGE	BLACK	2	YELLOW ARROW
RED	BLACK	2	RED ARROW
GREEN	WHITE	3	WALK
RED	WHITE	3	DON'T WALK
BLUE	WHITE	4	WALK
BLACK	WHITE	4	DON'T WALK
BLUE			SPARE
WHITE	BLACK		SPARE
BLACK			SPARE
BLUE	BLACK		SPARE
BLACK	RED		COMMON WHITE TAG
WHITE			COMMON

MAST ARM POLES ON THE NW & SE CORNERS

WIRE COLOR	TRACER	SIGNAL NO.	FUNCTION
GREEN			SPARE
ORANGE			SPARE
RED			SPARE
GREEN	BLACK	7	GREEN ARROW
ORANGE	BLACK	7	YELLOW ARROW
RED	BLACK	7	RED ARROW
GREEN	WHITE	9	WALK
RED	WHITE	9	DON'T WALK
BLUE	WHITE	8	WALK
BLACK	WHITE	8	DON'T WALK
BLUE		6 & 7	GREEN
WHITE	BLACK	6 & 7	YELLOW
BLACK		6 & 7	RED
BLUE	BLACK		SPARE
BLACK	RED		COMMON WHITE TAG
WHITE			COMMON

COMM CABLE

WIRE COLOR	FUNCTION
RED	TRANSMIT
BLUE	TRANSMIT
GREEN	RECEIVE
WHITE	RECEIVE
ORANGE	SPARES
WHITE	SPARES
GREY	SPARES
WHITE	SPARES
BLUE	SPARES
WHITE	SPARES
BROWN	SPARES
WHITE	SPARES

PEDESTRIAN ACTUATED INSTALLATIONS

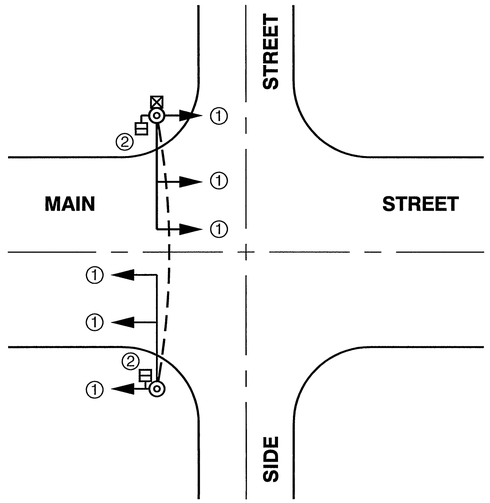

NORTH-SOUTH MAIN STREET

WIRE COLOR	TRACER	SIGNAL NO.	FUNCTION
GREEN		1	GREEN
ORANGE		1	YELLOW
RED		1	RED
GREEN	BLACK		SPARE
ORANGE	BLACK		SPARE
RED	BLACK		SPARE
BLACK	WHITE		SPARE
BLUE		2	E.W. WALK
WHITE	BLACK		COMMON WHITE TAG
BLACK		2	E.W. DON'T WALK
BLUE	BLACK		SPARE
WHITE			COMMON

EAST-WEST MAIN STREET

WIRE COLOR	TRACER	SIGNAL NO.	FUNCTION
GREEN		2	N.S. WALK
ORANGE			SPARE
RED		2	N.S. DON'T WALK
GREEN	BLACK		SPARE
ORANGE	BLACK		SPARE
RED	BLACK		SPARE
BLACK	WHITE		COMMON WHITE TAG
BLUE		1	GREEN
WHITE	BLACK	1	YELLOW
BLACK		1	RED
BLUE	BLACK		SPARE
WHITE			COMMON

NOTES

1. EACH CABLE SHALL BE IDENTIFIED BY MEANS OF METAL TAGS WHERE IT COMES INTO THE CONTROLLER CABINET OR CONTROLLER "T" BASE. THE IDENTIFICATION SHALL DENOTE THE FINAL DESTINATION OF EACH CABLE. (F.E. N.E., S.W., N.C. ISLAND, S.C. ISLAND).
2. NO BREAKS OR SPLICES SHALL BE MADE BETWEEN THE CONTROLLER CABINET AND THE CABLES FINAL DESTINATION, UNLESS APPROVED BY THE ENGINEER. WHERE POSSIBLE, SPLICES SHALL BE IN POLE BASES RATHER THAN PULL-BOXES.
3. AT EACH POLE, A SEPARATE 5-CONDUCTOR CABLE SHALL BE INSTALLED FROM EACH TWO OR THREE-SECTION SIGNAL HEAD ASSEMBLY TO THE SIGNAL POLE BASE. A 7 - CONDUCTOR CABLE SHALL BE INSTALLED FROM A FIVE-SECTION SIGNAL HEAD ASSEMBLY TO THE SIGNAL POLE BASE.

Charlie Krajeck
TRAFFIC ENGINEER

Jerry Vinezer
CITY ENGINEER

CITY OF OMAHA PUBLIC WORKS DEPARTMENT

STANDARD TRAFFIC SIGNAL WIRING CODES

STANDARD PLATE **6-74**

SHEET 1/1

ISSUE DATE: ..... MARCH 26, 2003

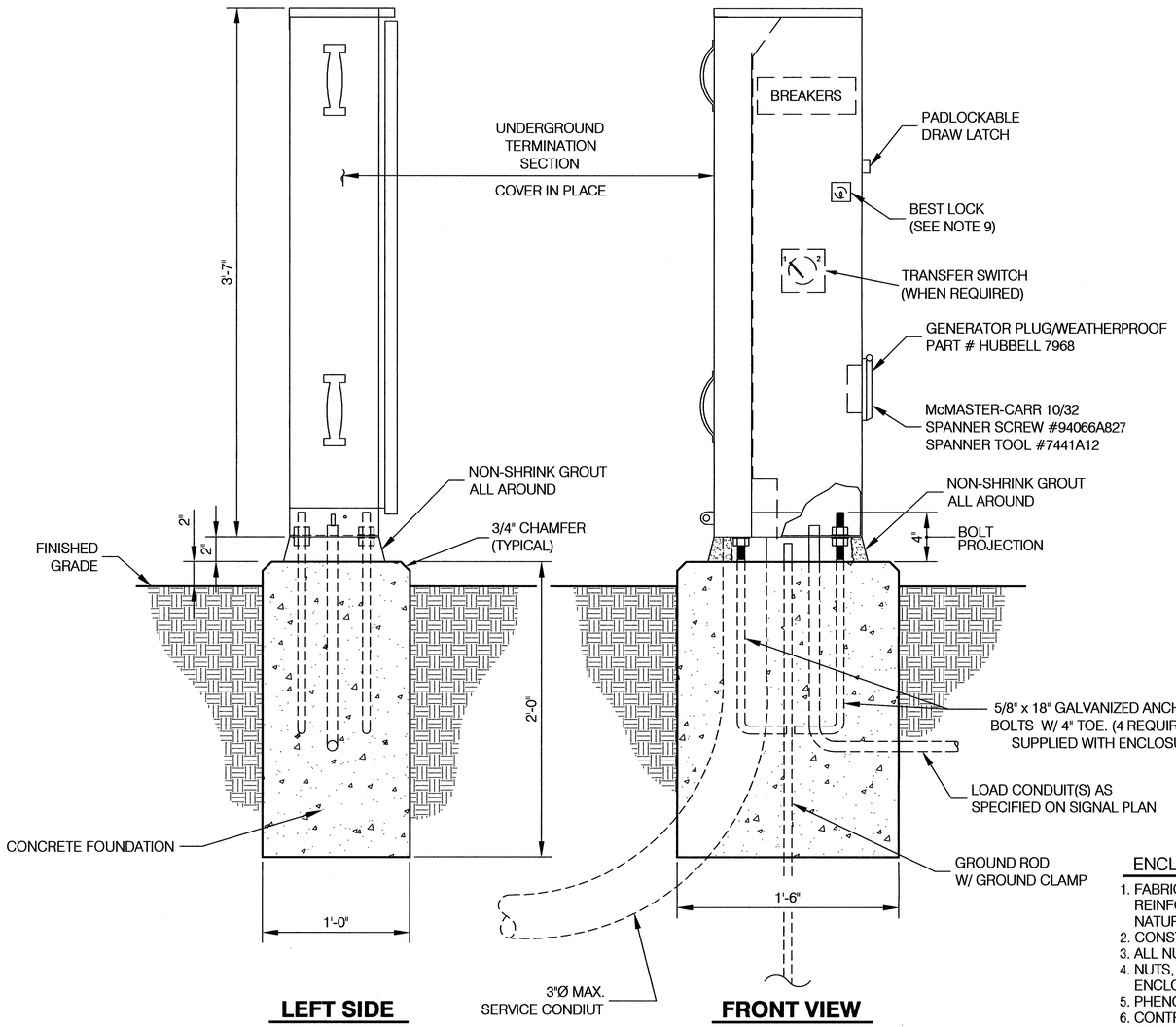

LEFT SIDE

COVERS IN PLACE
MOUNTED ON PAD

FRONT VIEW

LANDING LUGS
#6-250MCM
AL/CU

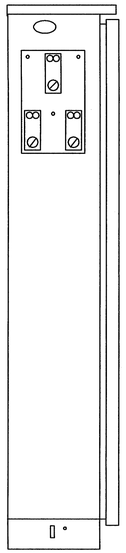

RIGHT SIDE INTERIOR VIEW

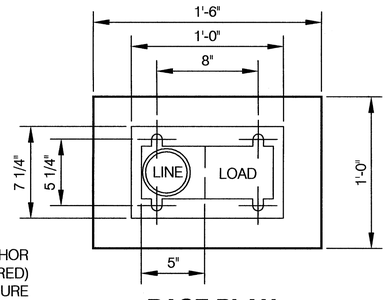

BASE PLAN

SCALE: NONE

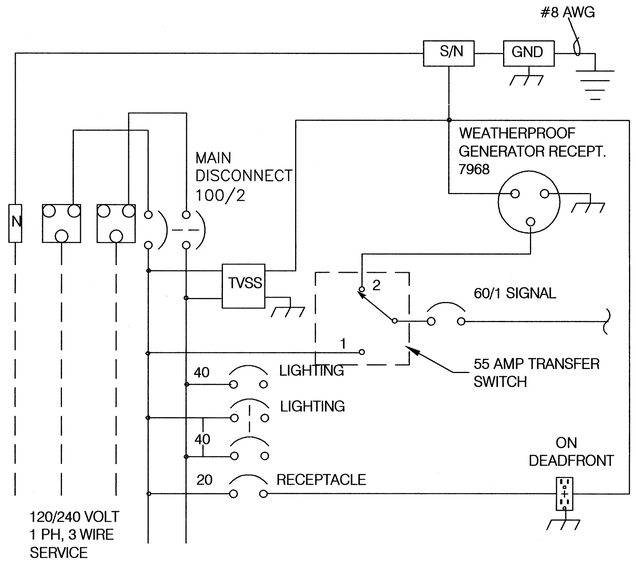

WIRING DIAGRAM WITH TRANSFER SWITCH

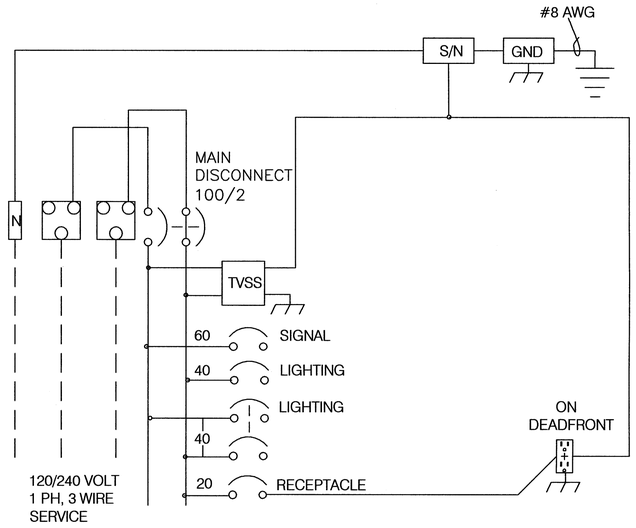

WIRING DIAGRAM WITHOUT TRANSFER SWITCH

ENCLOSURE CONSTRUCTION NOTES

1. FABRICATED FROM 1/8" ALUMINUM, ELECTRICALLY WELDED AND REINFORCED WHERE REQUIRED. THE CABINET SHALL BE UNPAINTED NATURAL ALUMINUM.
2. CONSTRUCTION WILL BE NEMA 3R RAINTIGHT.
3. ALL NUTS, BOLTS, SCREWS, AND HINGES, WILL BE STAINLESS STEEL.
4. NUTS, BOLTS, AND SCREWS WILL NOT BE VISIBLE FROM OUTSIDE OF ENCLOSURE.
5. PHENOLIC NAMEPLATES WILL BE PROVIDED AS REQUIRED.
6. CONTROL WIRING WILL BE MARKED AT BOTH ENDS BY PERMANENT WIRE MARKERS.
7. A PLASTIC COVERED WIRING DIAGRAM WILL BE ATTACHED TO THE INSIDE OF THE FRONT DOOR.
8. ENCLOSURE WILL BE FACTORY WIRED AND CONFORM TO REQUIRED NEMA STANDARDS.
9. LOCK TO MATCH CURRENT CITY COMBINATION
10. SERVICE ENCLOSURE SHALL BE TESCO CLASS 26-100-UM-A2 OR CITY APPROVED EQUAL PRIOR TO BID.
11. CONCRETE FOR FOUNDATION SHALL BE FL60.
12. ENCLOSURE SHALL BE SET PLUMB AND LEVEL

TRAFFIC ENGINEER
CITY ENGINEER

CITY OF OMAHA PUBLIC WORKS DEPARTMENT

ELECTRIC SERVICE PEDESTAL

STANDARD PLATE **6-76R1**

SHEET 1/1

ISSUE DATE: ..... APRIL 26, 2006

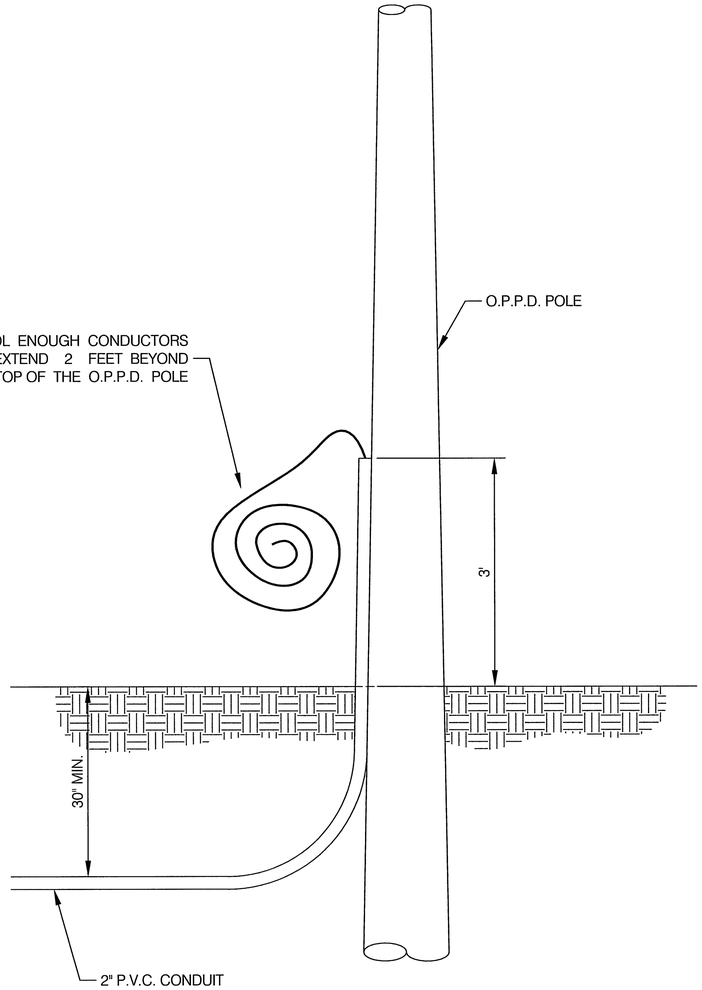

UNDERGROUND POWER SERVICE

NOTES

1. SERVICE RISER LOCATIONS SHALL BE AS SHOWN ON CONSTRUCTION PLANS.
2. O.P.P.D. SHALL INSTALL MOLDING ON WOOD POLE TO COVER SERVICE CONDUCTORS. WORK SHALL BE COORDINATED WITH O.P.P.D.

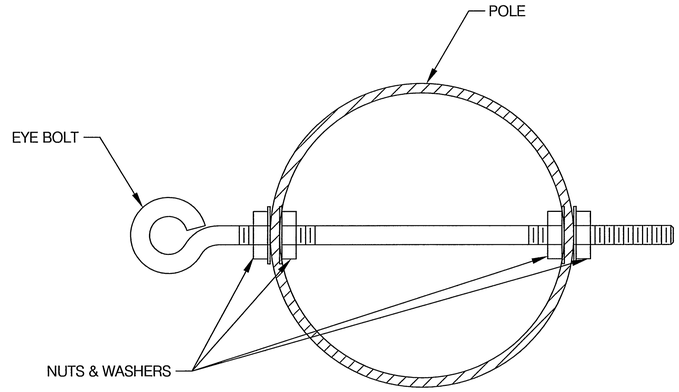

EYEBOLT CONNECTION DETAIL

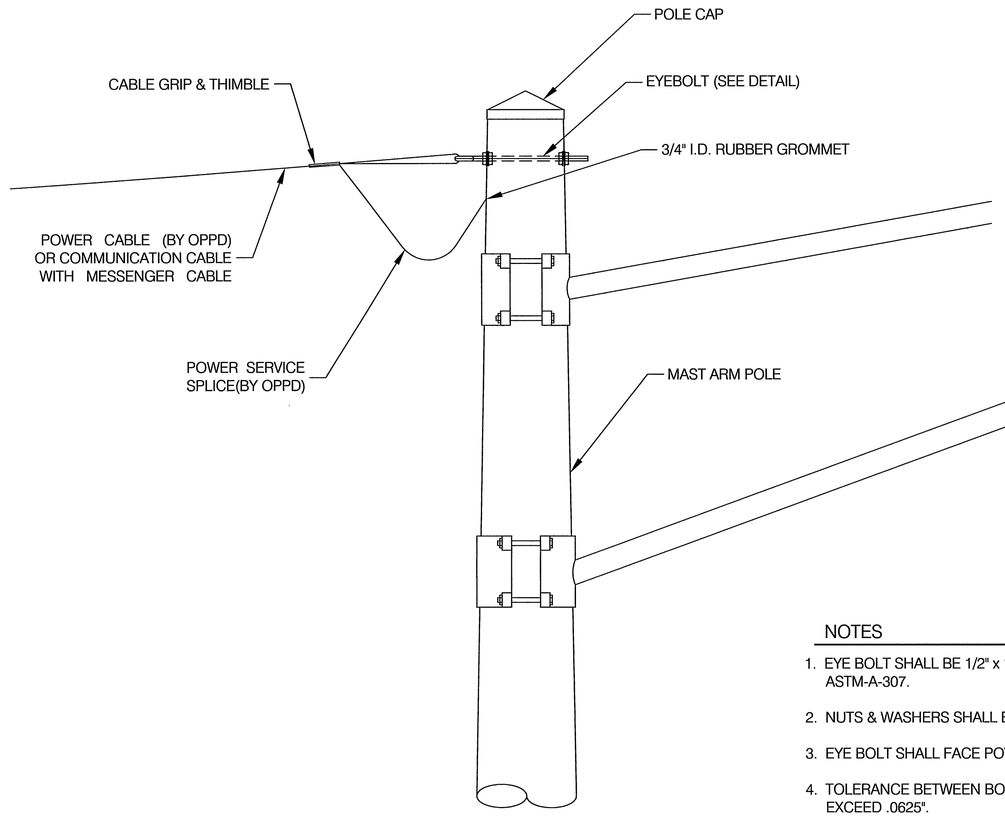

NOTES

1. EYE BOLT SHALL BE 1/2" x 12" GALVANIZED AND CONFORM TO ASTM-A-307.
2. NUTS & WASHERS SHALL BE GALVANIZED.
3. EYE BOLT SHALL FACE POWER SOURCE.
4. TOLERANCE BETWEEN BOLT AND BOLTHOLE SHALL NOT EXCEED .0625".

OVERHEAD POWER SERVICE/COMMUNICATIONS CABLE

Charlie Krajicek
TRAFFIC ENGINEER

Henry Velregge
CITY ENGINEER

CITY OF OMAHA PUBLIC WORKS DEPARTMENT

POWER SERVICE DETAILS

STANDARD PLATE 6-78

SHEET 1/1

ISSUE DATE: ..... MARCH 26, 2003

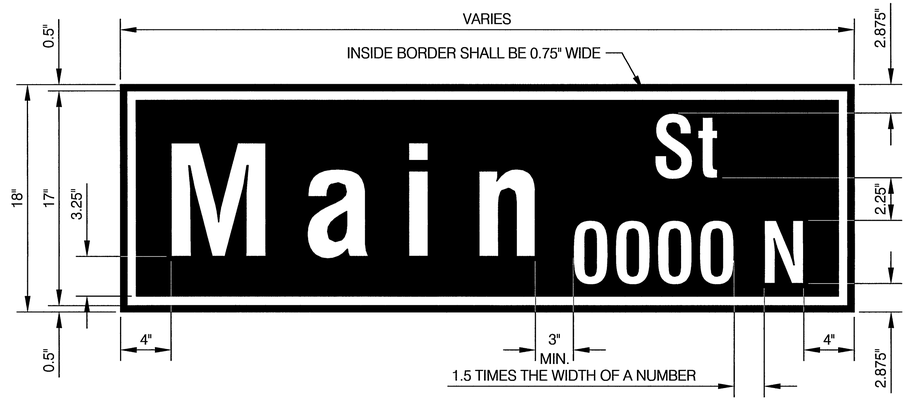

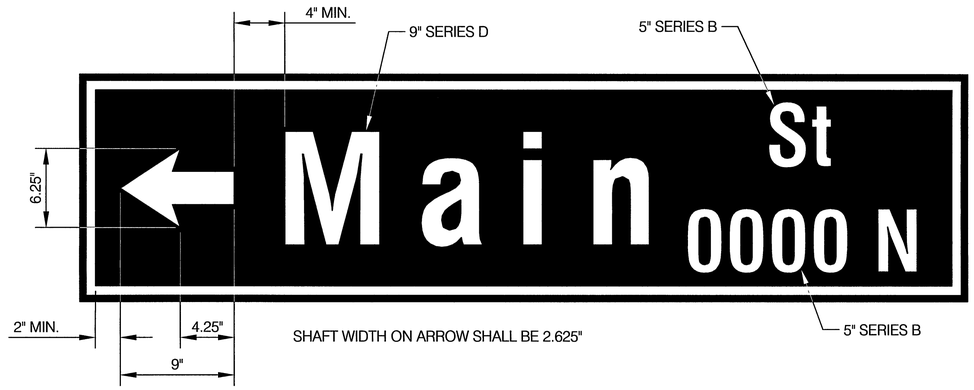

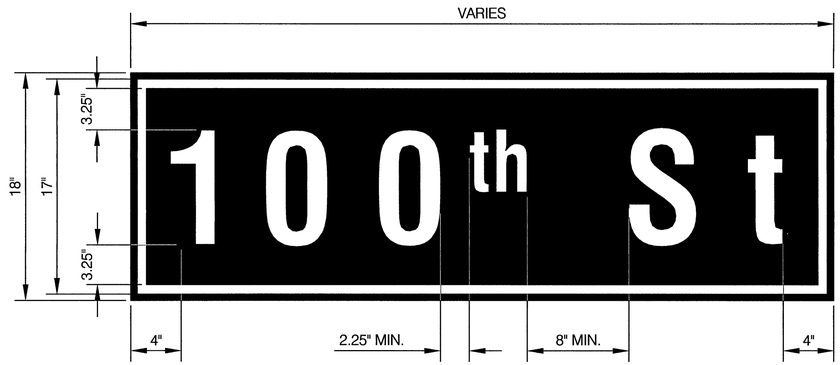

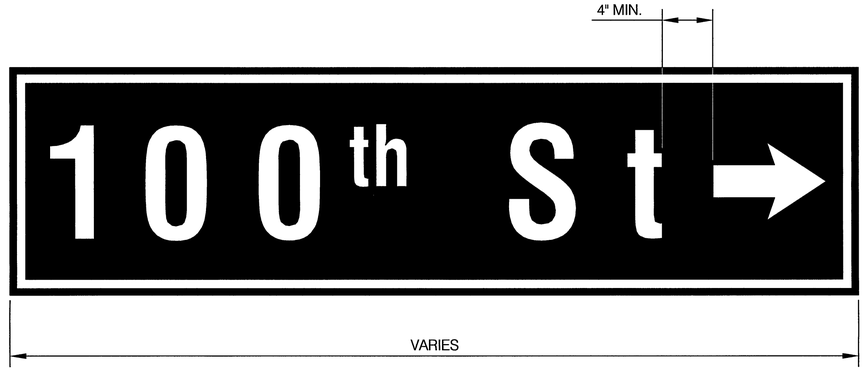

NOTES

1. STREET NAME SIGNS SHALL BE FABRICATED OF VIP DIAMOND GRADE REFLECTIVE SHEETING, SINGLE FACED ON 0.125 INCH THICKNESS, 6061-T6 OR 5052-H38 ALUMINUM SIGN BLANKS (FROM STRETCHER LEVEL FLAT SHEETING) FOR MAST ARM MOUNTING.
2. ACCEPTABLE LENGTHS VARY FROM 3 FEET TO 7 FEET IN 6 INCH INCREMENTS.
3. COLORS USED FOR THE THE STREET NAME SIGNS SHALL BE WHITE (SILVER) TEXT ON GREEN BACKGROUND.
4. THE SIZES AND SPACING OF UPPER AND LOWER CASE LETTERS ARE SPECIFIED IN THE "STANDARD ALPHABETS FOR HIGHWAY SIGNS", FEDERAL HIGHWAY ADMINISTRATION, 1966 EDITION, REPRINTED APRIL, 1984.
5. SIGN FACES MAY BE FABRICATED USING EITHER EC FILM, CUT OUT LETTERS OR REVERSE SCREENED.

Charlie Keopnik TRAFFIC ENGINEER Henry Vieregger CITY ENGINEER	CITY OF OMAHA PUBLIC WORKS DEPARTMENT **STREET NAME SIGN LAYOUT** **TYPE " A ", MAST ARM MOUNTED** **18" SIGN HEIGHT**	**STANDARD PLATE** **6-80**	SHEET 1/2
		ISSUE DATE: ..... MARCH 26, 2003	

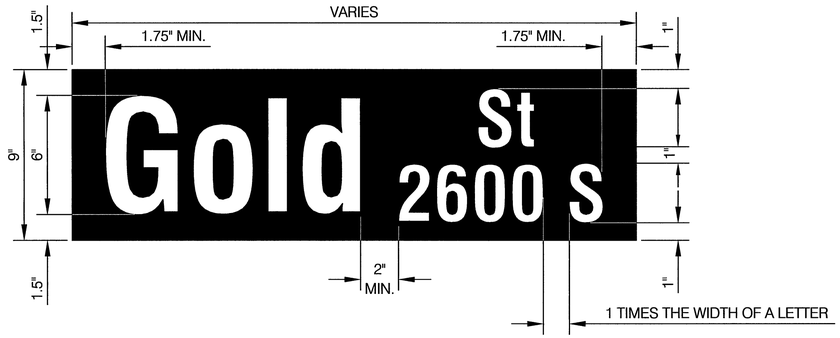

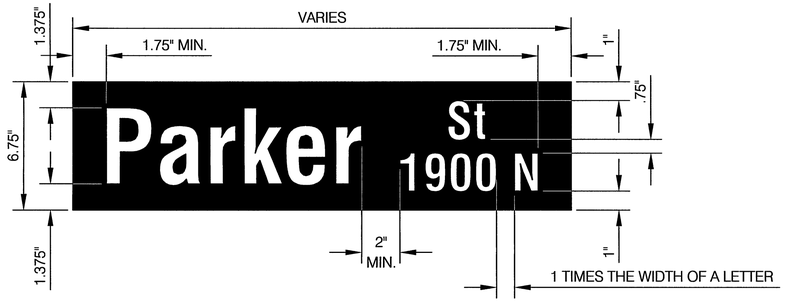

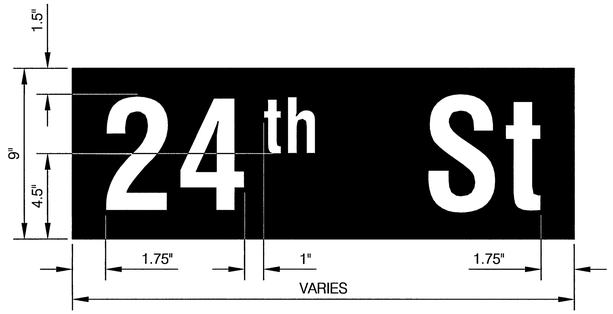

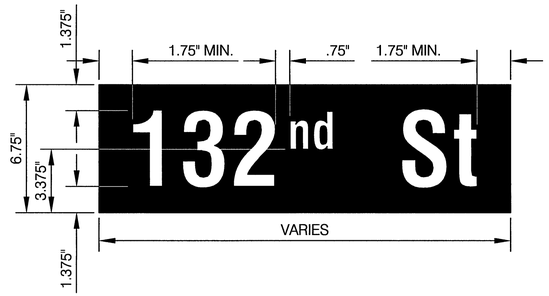

TYPE " B ", SIDE STREET
9" SIGN HEIGHT
3" AND 6" LETTERS SERIES B

TYPE " C ", SIDE STREET
6 3/4" SIGN HEIGHT
2" AND 4" LETTERS SERIES B

NOTES

1. TYPE " B " STREET NAME SIGNS SHALL BE FABRICATED OF VIP DIAMOND GRADE REFLECTIVE SHEETING, DOUBLE FACED ON 0.10 INCH THICK, 6063-T6 OR 5052-H38 (ALUMINUM ALLOY) EXTRUDED (0.25") SIGN BLANKS. EXTRUDED ALUMINUM SIGN BLANKS SHALL BE USED FOR STREET NAME SIGN BLANKS LONGER THAN 36 INCHES.
   ACCEPTABLE LENGTHS FOR TYPE " B " SIGNS ARE 24", 30", 36", 42" AND 48".
2. TYPE " C " STREET NAME SIGNS SHALL BE FABRICATED OF HIGH INTENSITY GRADE / SUPER ENGINEERING GRADE REFLECTIVE SHEETING, DOUBLE FACED ON 0.10 INCH THICK, 6061-T6 OR 5052-H38 ALUMINUM SIGN BLANKS. (ALUMINUM FROM STRETCHER LEVEL FLAT SHEETING)
   ACCEPTABLE LENGTHS FOR TYPE " C " SIGNS ARE 24", 30" AND 36".
3. COLORS USED FOR ALL STREET NAME SIGNS SHALL BE WHITE (SILVER) TEXT ON GREEN BACKGROUND.
4. THE SIZES AND SPACING OF UPPER AND LOWER CASE LETTERS ARE SPECIFIED IN THE "STANDARD ALPHABETS FOR HIGHWAY SIGNS", FEDERAL HIGHWAY ADMINISTRATION, 1966 EDITION, REPRINTED APRIL, 1984.
5. SIGN FACES MAY BE FABRICATED USING EITHER EC FILM, CUT OUT LETTERS OR REVERSE SCREENED.

TRAFFIC ENGINEER

CITY ENGINEER

CITY OF OMAHA PUBLIC WORKS DEPARTMENT

STREET NAME SIGN LAYOUT
TYPES " B " AND " C " SIDE STREETS

STANDARD PLATE 6-80

SHEET 2/2

ISSUE DATE: ..... MARCH 26, 2003

STREET NAME SIGN ON MAST ARM POLE

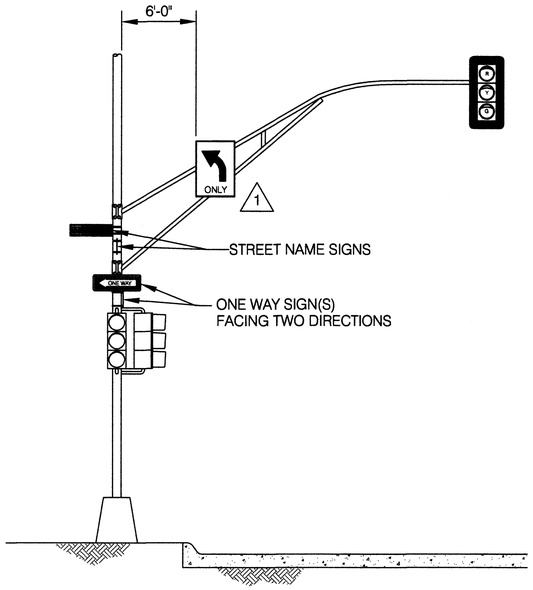

STREET NAME SIGN ON MAST ARM

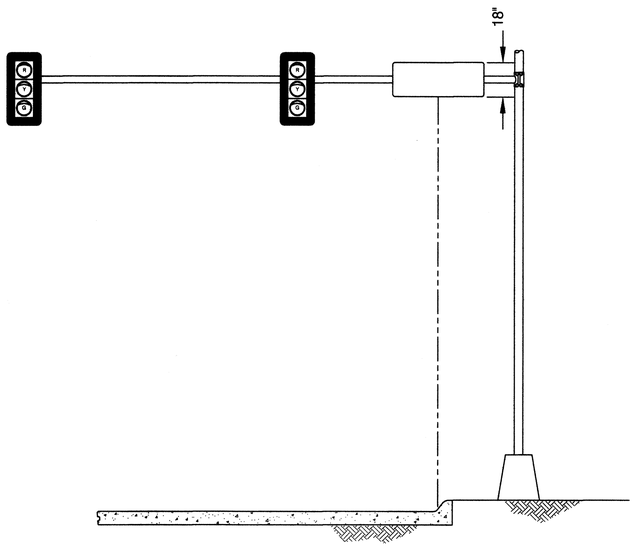

STREET NAME SIGN ON POLE

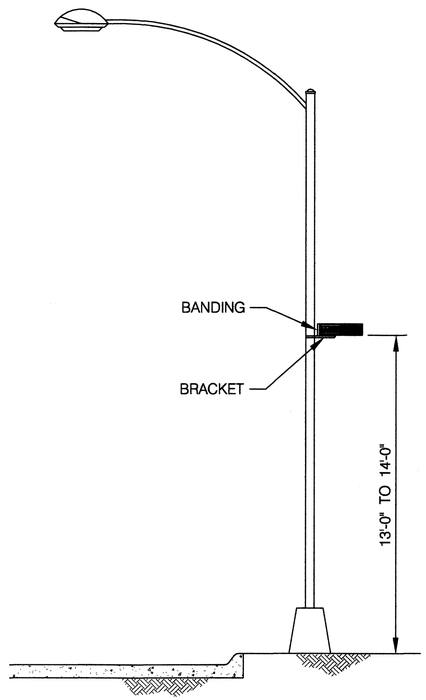

CANTILEVER SIGN STRUCTURE

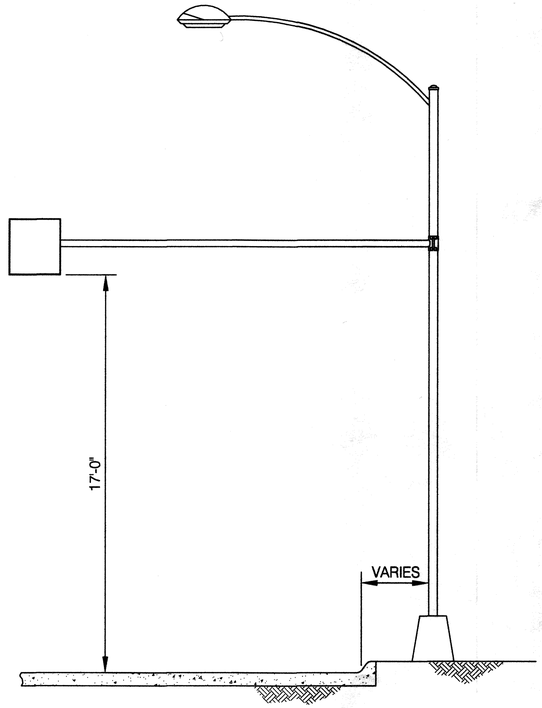

NOTES

1. TYPE " B ", 9" HIGH STREET NAME SIGNS SHALL BE MOUNTED TO THE UPRIGHT WITH A NO. 8 METRO WING BRACKET AS MANUFACTURED BY "HALL SIGNS" OR PRE-APPROVED EQUAL.
2. MAST ARM SIGNS SHALL BE MOUNTED WITH AN ASTRO BRACKET AND 3/4" BANDING.
3. TYPE " A ",18" HIGH STREET NAME SIGNS SHALL BE MOUNTED TO WOOD POLE SPAN WIRES WITH " Z " BRACKETS OR ASTRO BRACKETS.

1 REVISION 3/7/2012	TRAFFIC ENGINEER CITY ENGINEER	CITY OF OMAHA PUBLIC WORKS DEPARTMENT **OVERHEAD MOUNTED SIGNS**	**STANDARD PLATE 6-82** SHEET 1/1 ISSUE DATE: ..... MARCH 26, 2003

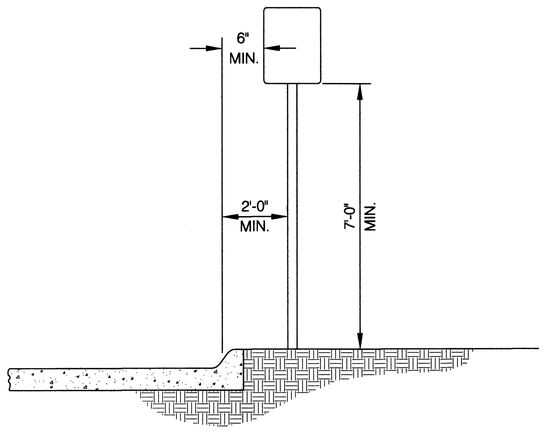

ROADSIDE SIGN ON POST

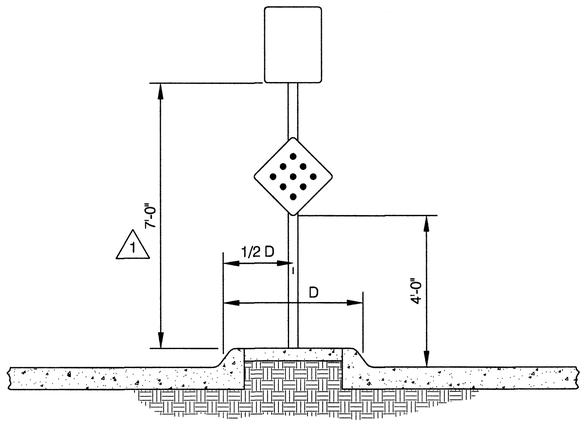

SIGN ON ISLAND IN LINE OF TRAFFIC

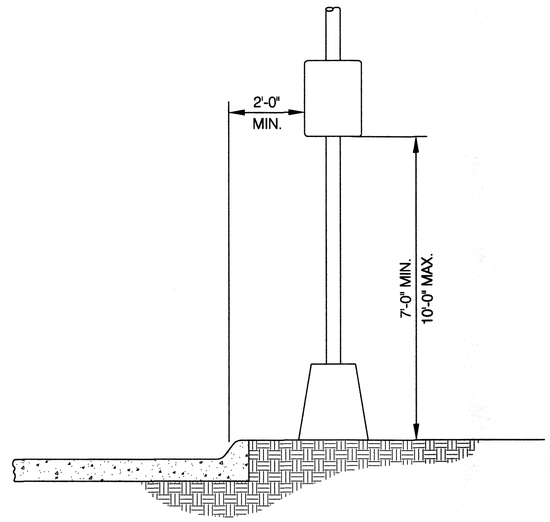

ROADSIDE SIGN ON POLE

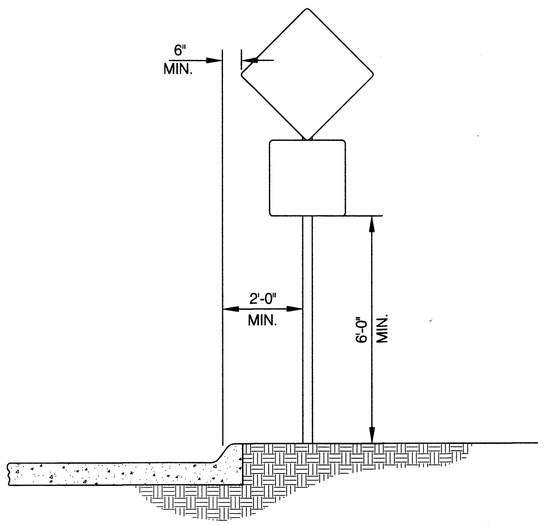

ROADSIDE SIGN ON POST WITH SECONDARY SIGN

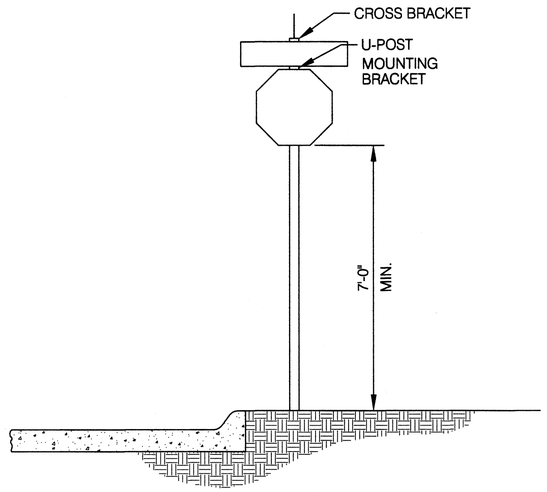

STREET NAME SIGN ABOVE STOP SIGN

NOTES

1. ALL MOUNTING HARDWARE SHALL BE GALVANIZED.
2. MOUNTING HARDWARE SHALL BE "BANDIT" OR PRE-APPROVED EQUAL. TYPES OF MOUNTING HARDWARE THAT MAY BE REQUIRED ARE:
   C156 3/4" VALUCLIP
   DO22 BRACK-IT
   3/4" x 0.020" BANDING STRAP
3. 6 3/4" OR 9" HEIGHT STREET NAME SIGNS SHALL BE MOUNTED ABOVE STOP SIGNS USING THE FOLLOWING MOUNTING DEVICES:
   91UH-NU180 BRACKET AND 9-90F CROSS BRACKET AS MANUFACTURED BY "HALL SIGNS" OR AN APPROVED EQUAL.

1	REVISION 3/07/2012	TRAFFIC ENGINEER	CITY OF OMAHA PUBLIC WORKS DEPARTMENT	
		CITY ENGINEER	**POST MOUNTED SIGNS**	STANDARD PLATE **6-84** SHEET 1/1
				ISSUE DATE: ..... MARCH 26, 2003

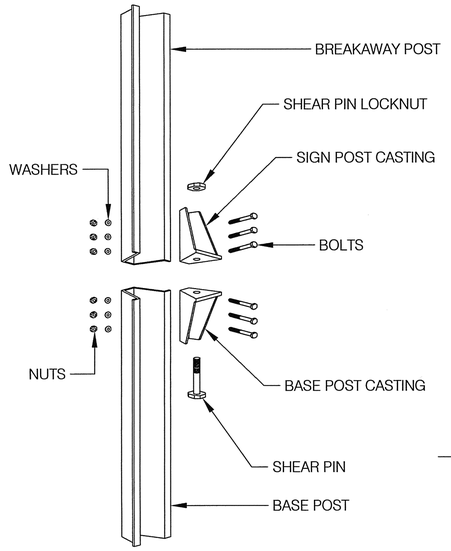

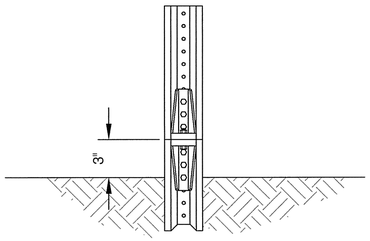

MINUTE-MAN CHANNEL POST BREAKAWAY SYSTEM

	TUBING	LENGTH
SIGN POST ANCHOR	2 1/4" x 2 1/4"	3'-0"
ANCHOR SLEEVE	2 1/2" x 2 1/2"	1'-6"
SIGN POST	2" x 2"	VARIES

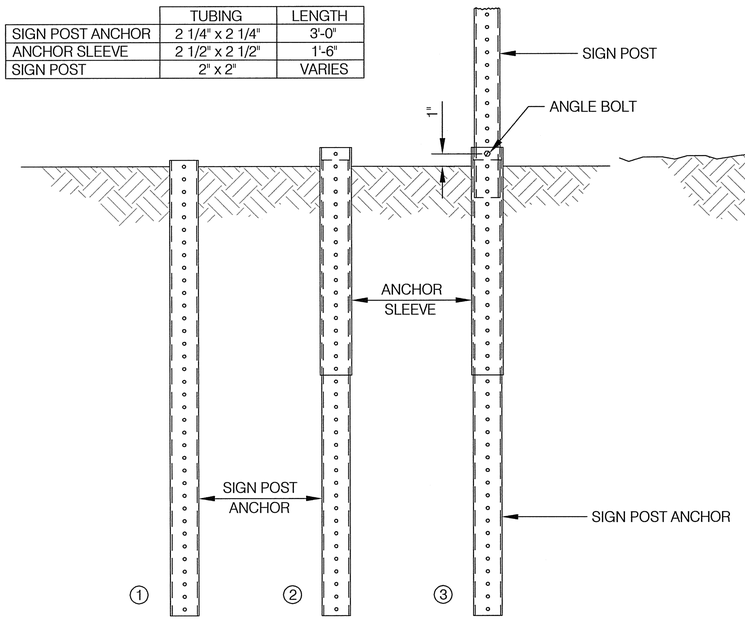

UNI-STRUT SIGN POST INSTALLATION

SIGN POST ANCHOR

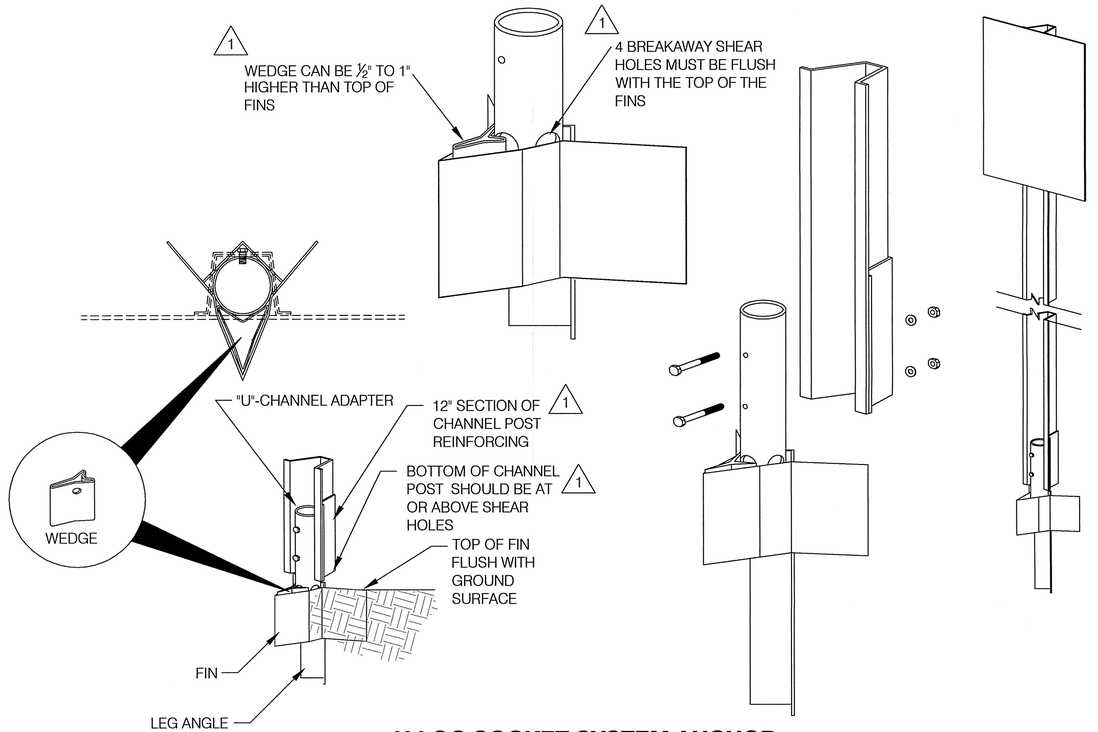

V-LOC SOCKET SYSTEM ANCHOR

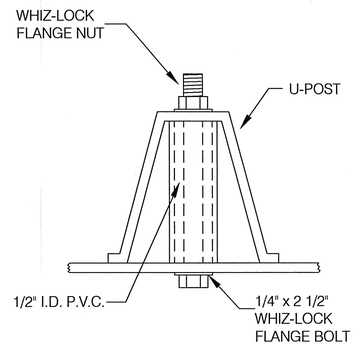

MOUNTING HARDWARE

NOTES

1. V-LOC SOCKET SYSTEM 19-VR3U WITH 12" CHANNEL POST ADAPTER SHALL BE NO. 19-UCA-2 OR PRE-APPROVED EQUAL.
2. THE MINUTE-MAN CHANNEL POST BREAKAWAY SYSTEM SHALL BE SUPPLIED AND INSTALLED WITHOUT THE CABLE TETHER TO KEEP THE POST AND STUB TOGETHER.

1	REVISION 02/18/2008	TRAFFIC ENGINEER	CITY OF OMAHA PUBLIC WORKS DEPARTMENT
		CITY ENGINEER	SIGN POST ANCHORING SYSTEMS
			STANDARD PLATE 6-85 SHEET 1/1
			ISSUE DATE: ..... MARCH 27, 2006

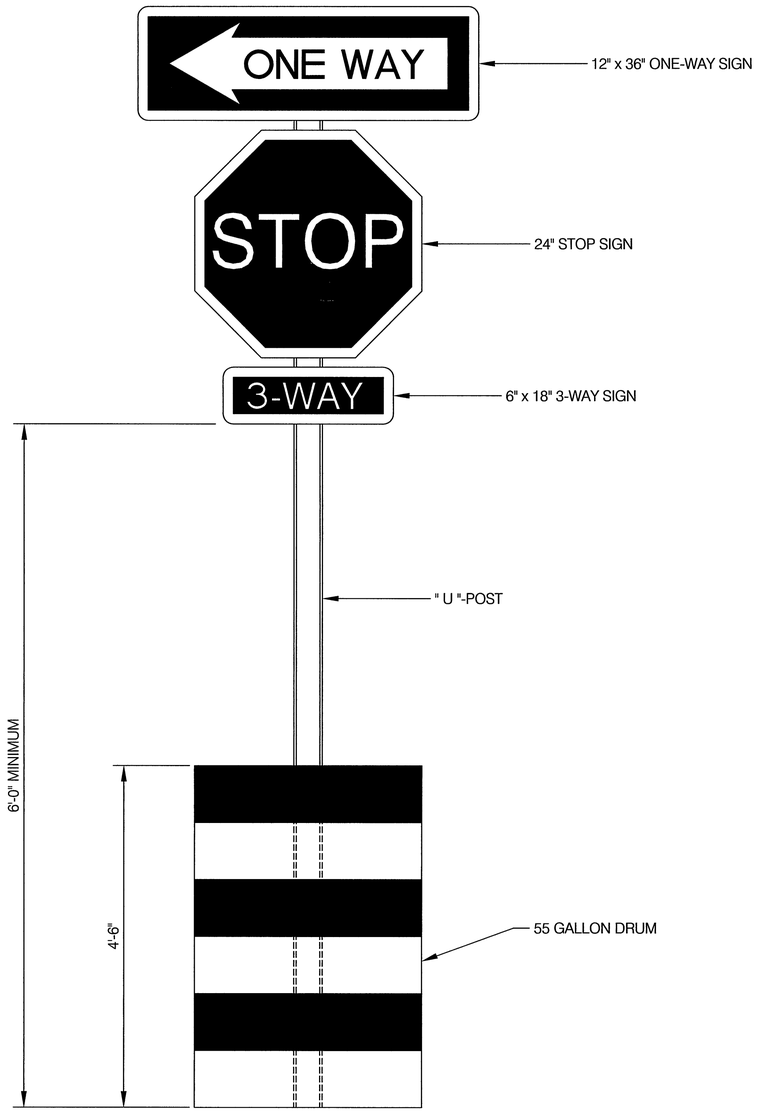

FRONT VIEW

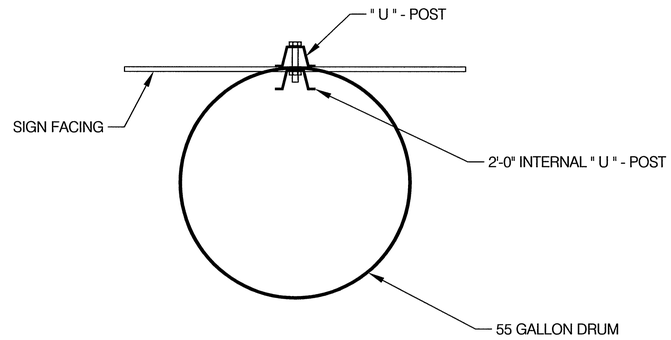

PLAN VIEW

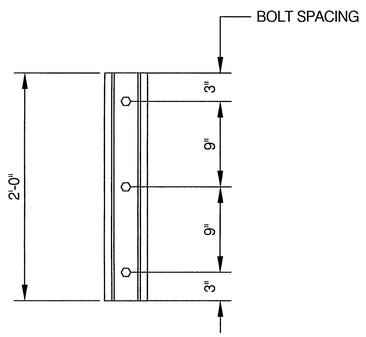

INTERNAL U-POST MOUNTING

NOTES

1. DRUMS USED FOR TEMPORARY SIGNING SHALL BE APPROXIMATELY 36" IN HEIGHT AND A MINIMUM OF 18" IN DIAMETER. THE MARKINGS ON DRUMS SHALL BE HORIZONTAL, CIRCUMFERENTIAL, ORANGE AND WHITE REFLECTORIZED STRIPES FOUR TO EIGHT INCHES WIDE, USING A MATERIAL THAT HAS A SMOOTH, SEALED OUTER SURFACE WHICH WILL DISPLAY THE SAME APPROXIMATE SIZE, SHAPE, AND COLOR, DAY AND NIGHT.
2. EACH DRUM SHALL HAVE A MINIMUM OF TWO ORANGE AND TWO WHITE STRIPES. ANY NON-REFLECTORIZED SPACES BETWEEN THE HORIZONTAL ORANGE AND WHITE STRIPES SHALL NOT EXCEED TWO INCHES IN HEIGHT.
3. THE DRUMS SHALL CONTAIN A MINIMUM OF 150 POUNDS OF SAND.
4. 24" "STOP" SIGNS SHALL BE USED ON RESIDENTIAL STREETS. 30" "STOP" SIGNS SHALL BE USED ON ALL OTHER STREETS.
5. THE INSTALLATION OF ALL SIGNS SHALL CONFORM TO THE GUIDELINES SET FORTH IN THE "MANUAL ON UNIFORM TRAFFIC CONTROL DEVICES". (MUTCD)
6. COMPONENTS SHALL BE ASSEMBLED BY PLACINIG A 2'-0" LONG "U"-POST VERTICALLY INSIDE THE BOTTOM OF THE DRUM AND BOLTING TOGETHER THROUGH THE DRUM THE "U"-POST ON THE OUTSIDE OF THE DRUM.

TRAFFIC ENGINEER

CITY ENGINEER

CITY OF OMAHA PUBLIC WORKS DEPARTMENT

CONSTRUCTION SIGN

STANDARD PLATE 6-88

SHEET 1/1

ISSUE DATE: ..... MARCH 26, 2003

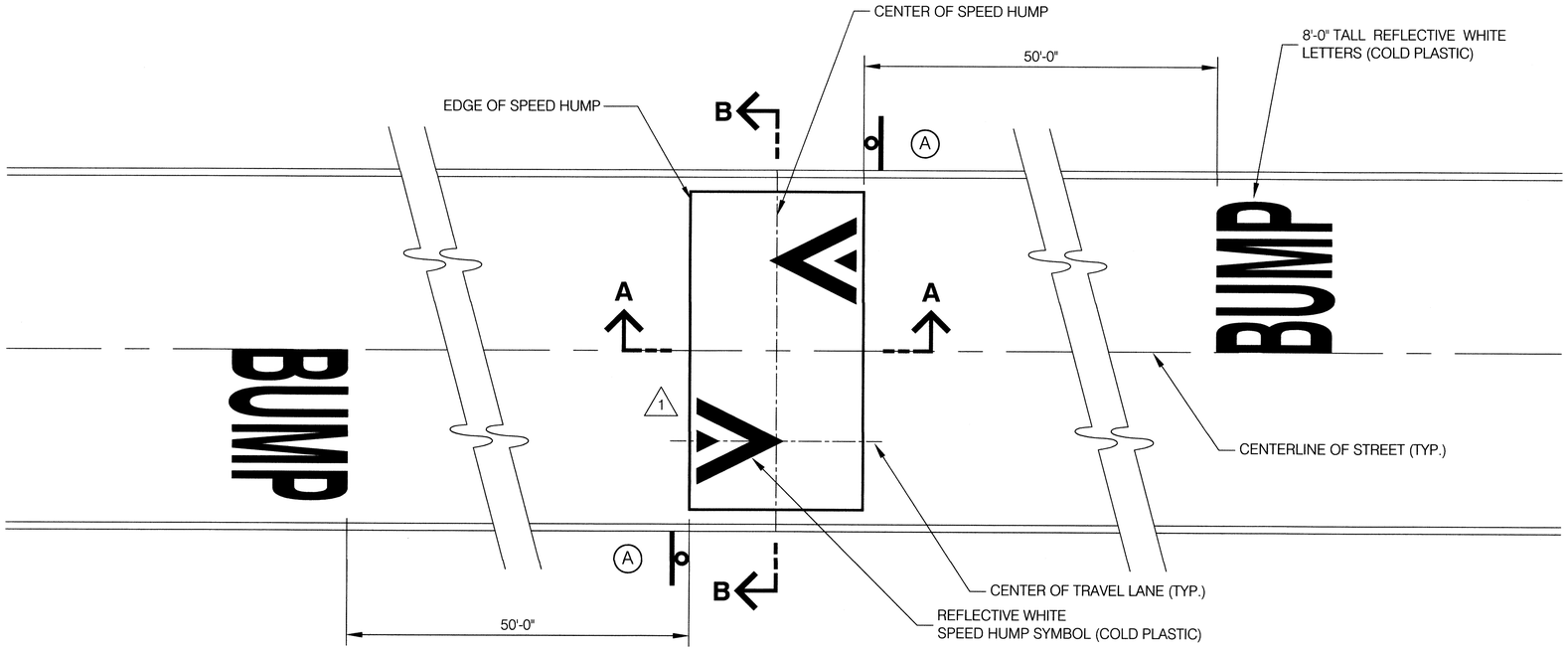

PLAN VIEW

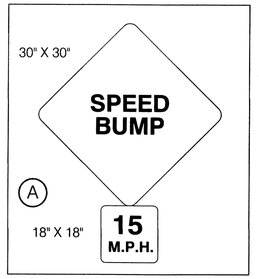

SIGNING LEGEND

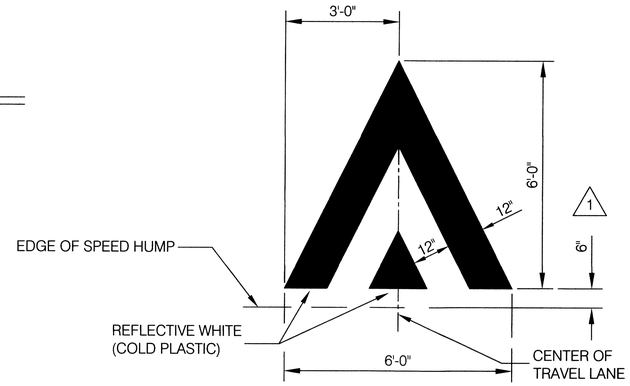

SPEED HUMP SYMBOL

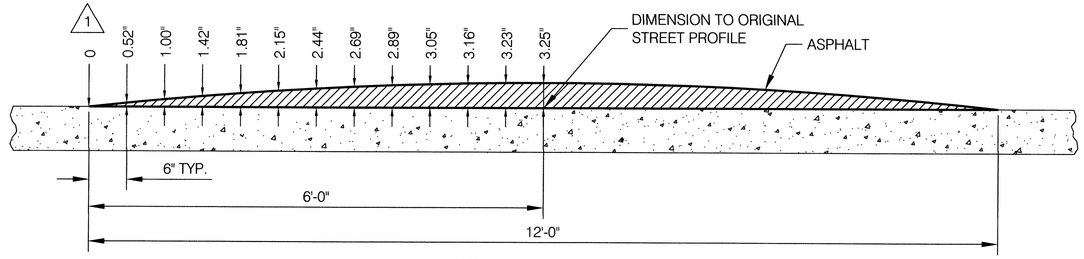

PROFILE SECTION A-A

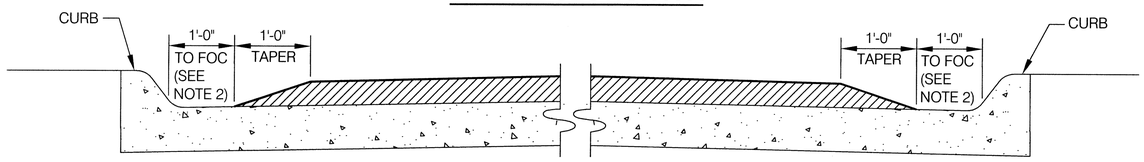

TYPICAL SECTION B-B

NOTES

1. PAVEMENT MARKINGS AND SIGNS ARE TO BE INSTALLED AT THE SAME TIME THE ASPHALT HUMP IS INSTALLED.
2. IF THE PAVEMENT CONSISTS OF ASPHALT SURFACE WITH CONCRETE COMBINATION CURB AND GUTTER, THE TAPER SHALL BEGIN AT THE OUTSIDE EDGE OF THE CONCRETE GUTTER.

1	REVISION 1/13/2011	CITY ENGINEER PUBLIC WORKS DIRECTOR	CITY OF OMAHA — PUBLIC WORKS DEPARTMENT **SPEED HUMP DETAILS ASPHALT SPEED HUMP**	STANDARD PLATE **6-90** SHEET 1/2 ISSUE DATE: ..... MAY 27, 2010

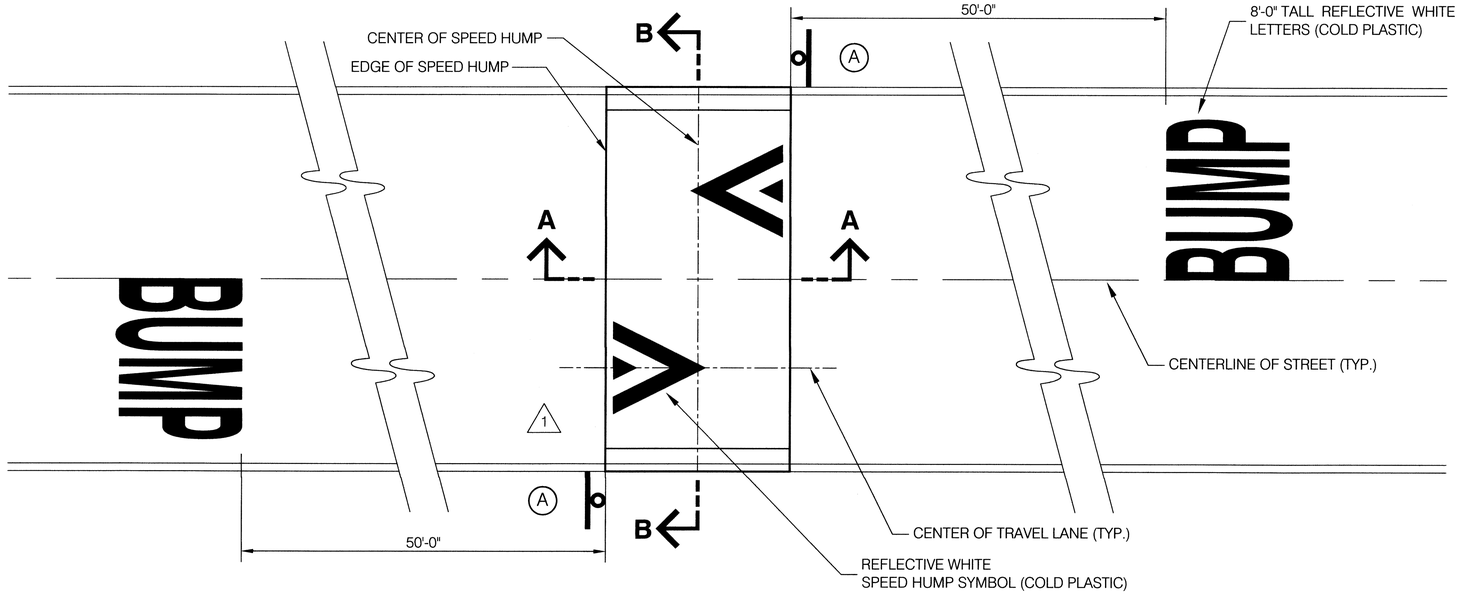

PLAN VIEW

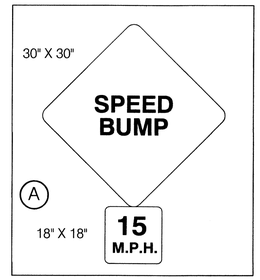

SIGNING LEGEND

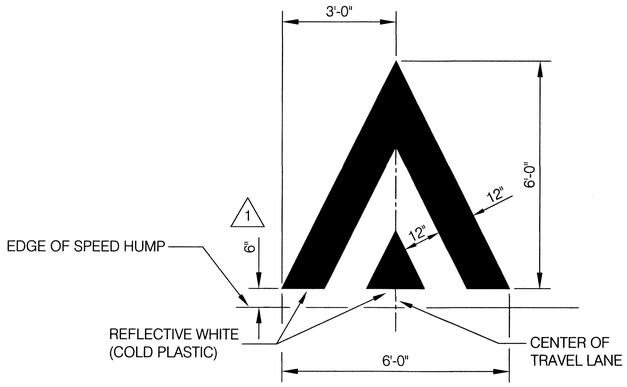

SPEED HUMP SYMBOL

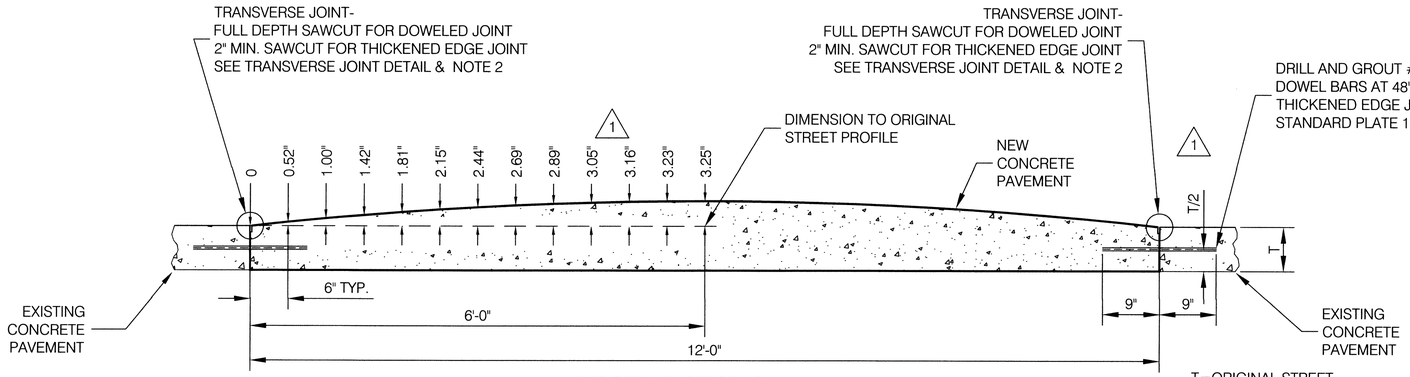

PROFILE SECTION A-A

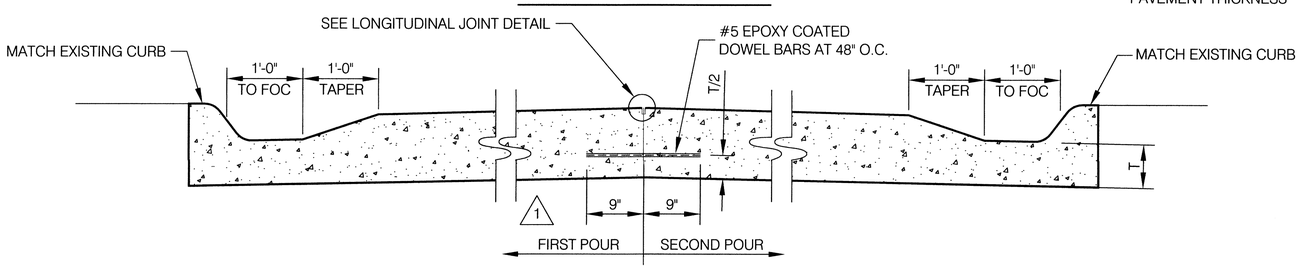

TYPICAL SECTION B-B

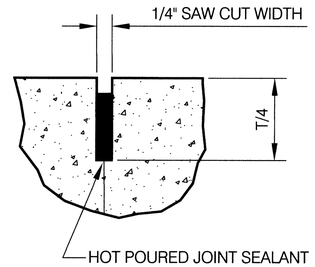

LONGITUDINAL JOINT DETAIL

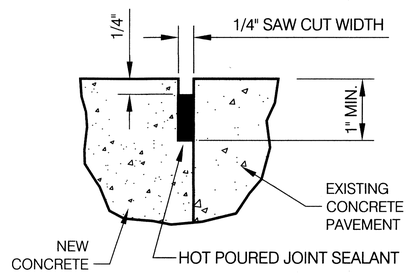

TRANSVERSE JOINT DETAIL

1

NOTES

1. SIGNS ARE TO BE INSTALLED AT THE SAME TIME THE CONCRETE HUMP IS INSTALLED.
2. IN SOME SITUATIONS, A TRANSVERSE JOINT MAY BE LOCATED BEYOND THE EDGE OF THE SPEED HUMP, FOR EXAMPLE: TO REPLACE ADDITIONAL PAVEMENT OR TO MATCH UP TO AN EXISTING TRANSVERSE JOINT.

1	REVISION 1/13/2011	CITY ENGINEER / PUBLIC WORKS DIRECTOR

CITY OF OMAHA PUBLIC WORKS DEPARTMENT

SPEED HUMP DETAILS
CONCRETE SPEED HUMP

STANDARD PLATE **6-90** SHEET 2/2

ISSUE DATE: ..... MAY 27, 2010

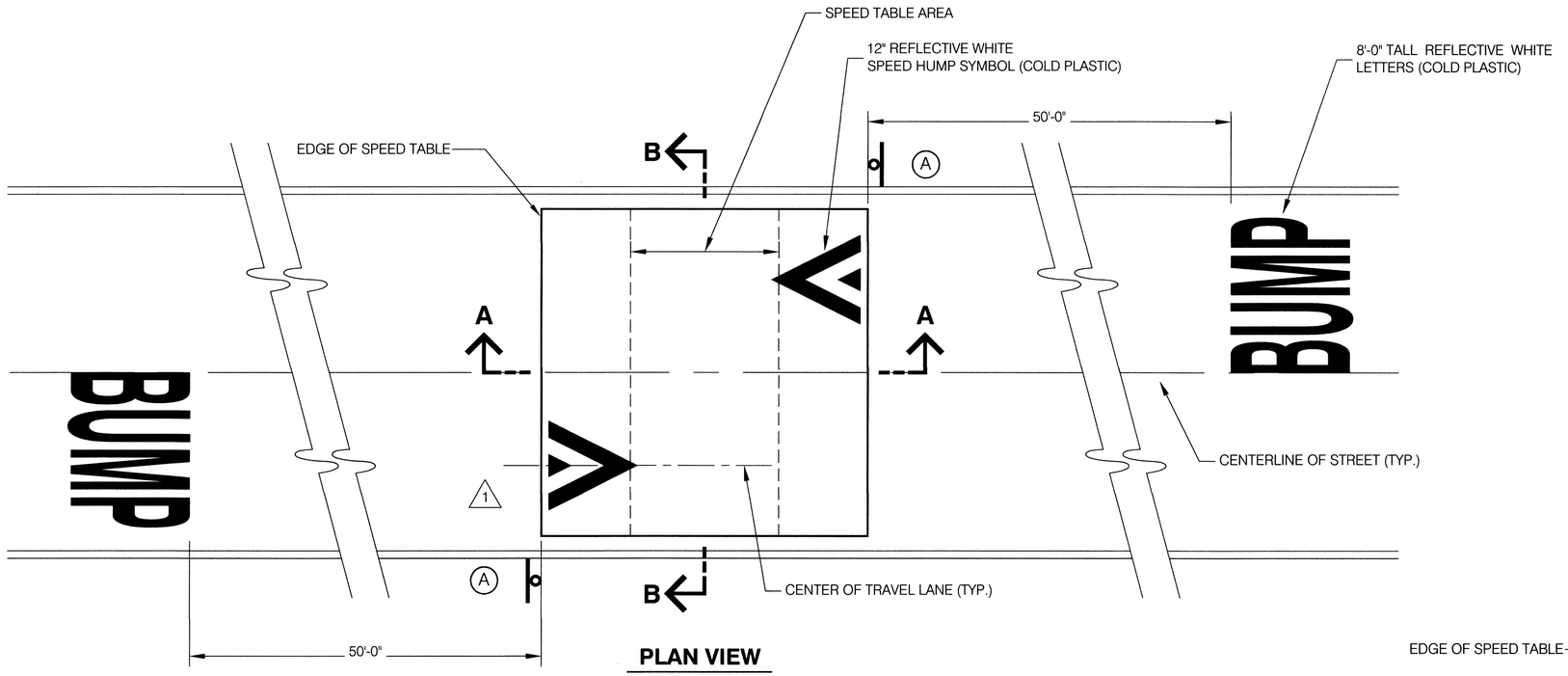

PLAN VIEW

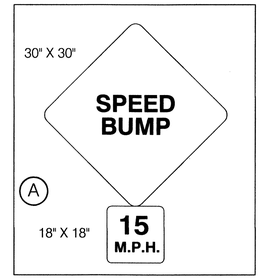

SIGNING LEGEND

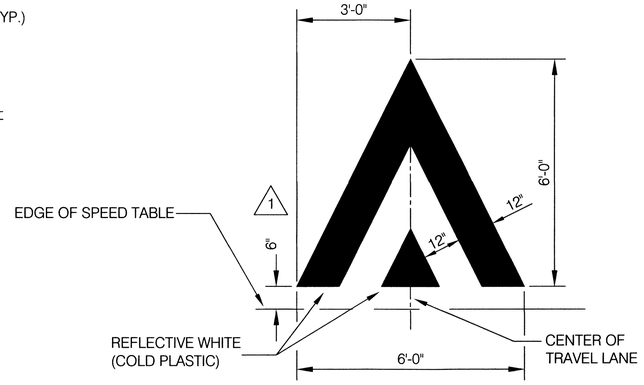

SPEED HUMP SYMBOL

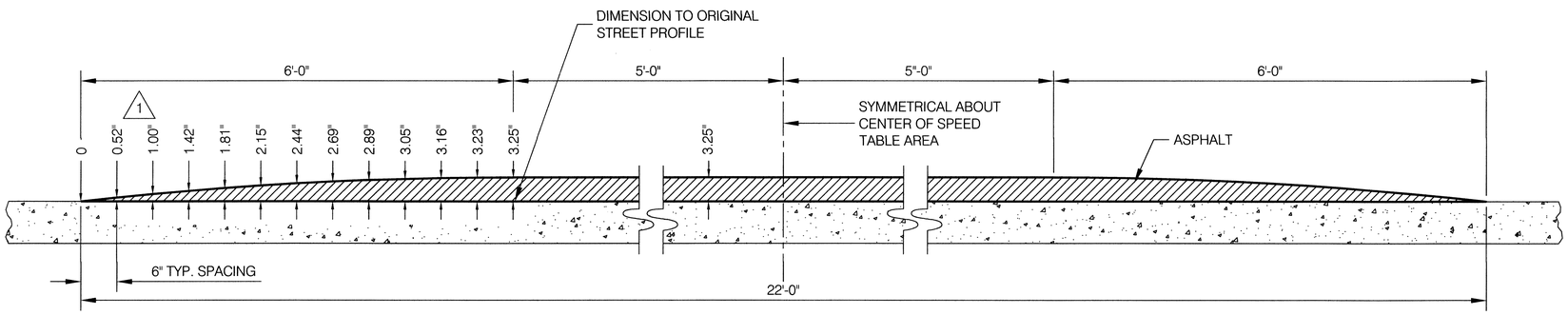

PROFILE SECTION A-A

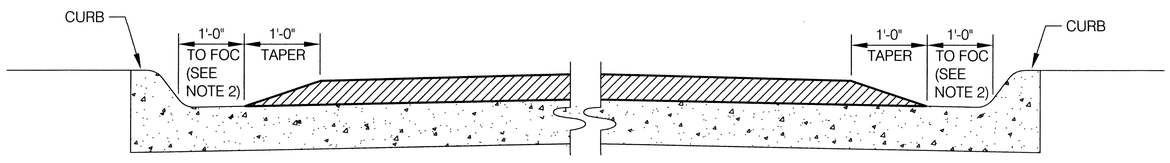

TYPICAL SECTION B-B

NOTES

1. PAVEMENT MARKINGS AND SIGNS ARE TO BE INSTALLED AT THE SAME TIME THE ASPHALT TABLE IS INSTALLED.
2. IF THE PAVEMENT CONSISTS OF ASPHALT SURFACE WITH CONCRETE COMBINATION CURB AND GUTTER, THE TAPER SHALL BEGIN AT THE OUTSIDE EDGE OF THE CONCRETE GUTTER.

1	REVISION 1/13/2011	CITY ENGINEER / PUBLIC WORKS DIRECTOR	CITY OF OMAHA — PUBLIC WORKS DEPARTMENT
			SPEED TABLE DETAILS ASPHALT SPEED TABLE
			STANDARD PLATE 6-91 — SHEET 1/3
			ISSUE DATE: ..... MAY 27, 2010

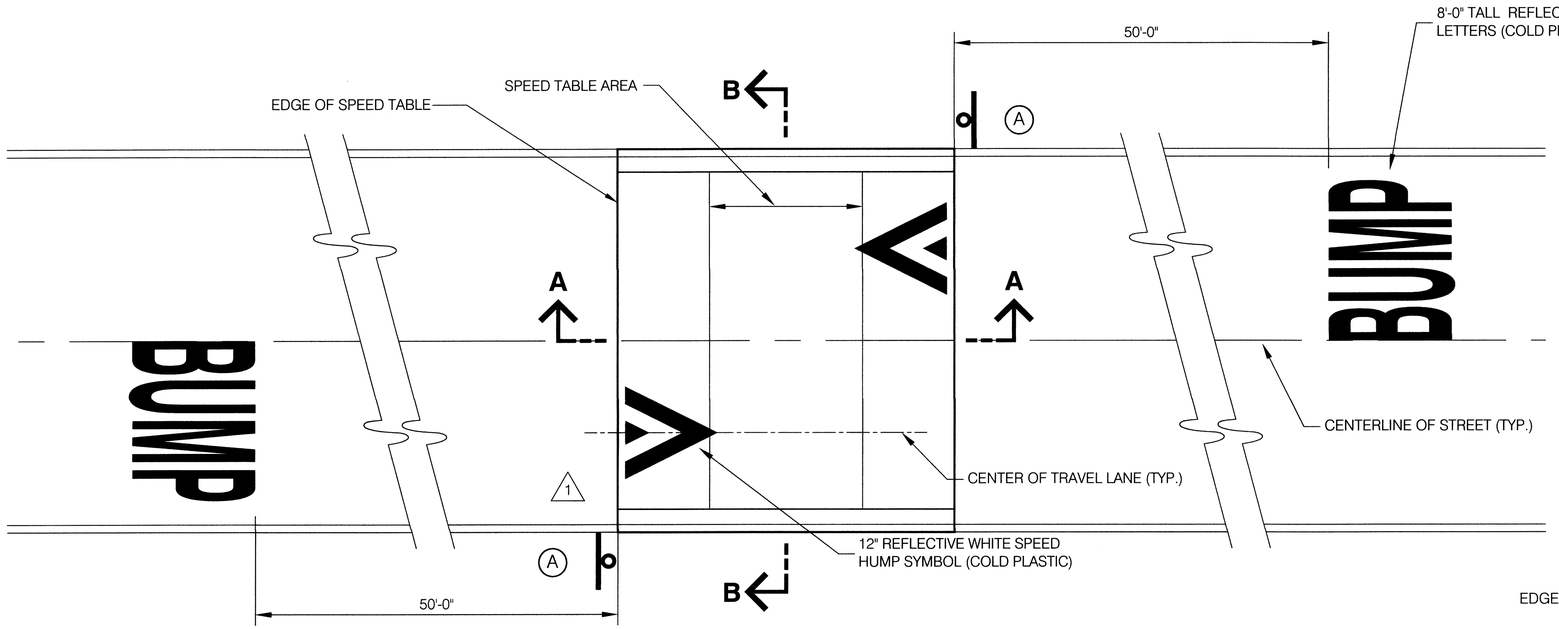

PLAN VIEW

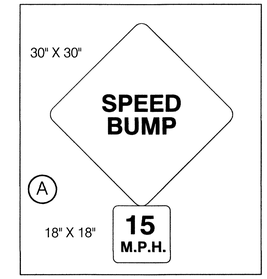

SIGNING LEGEND

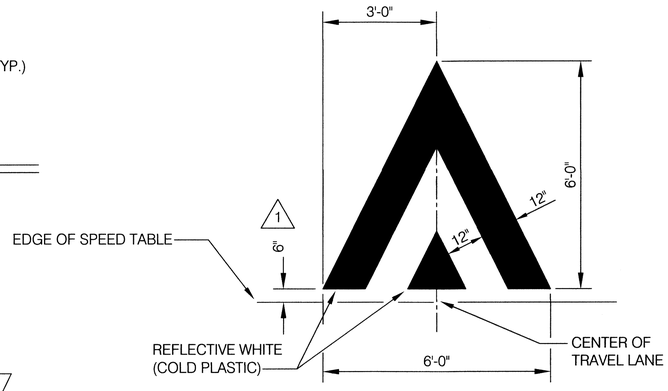

SPEED HUMP SYMBOL

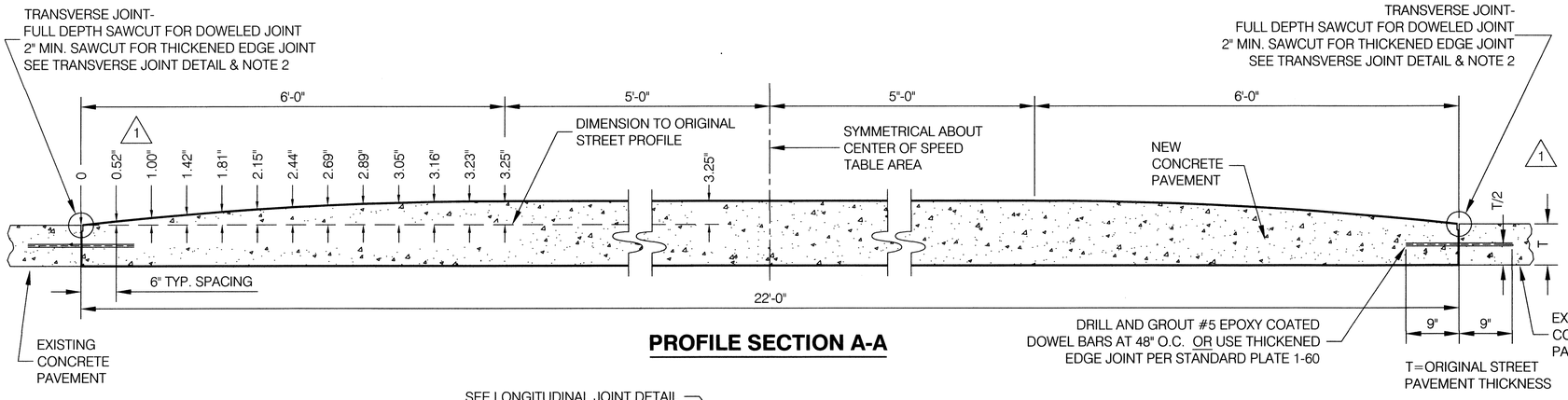

PROFILE SECTION A-A

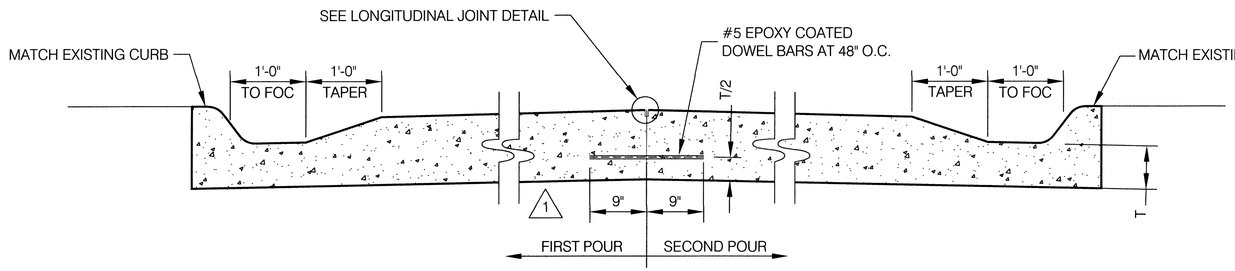

TYPICAL SECTION B-B

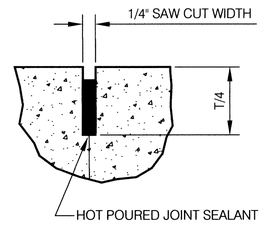

LONGITUDINAL JOINT DETAIL

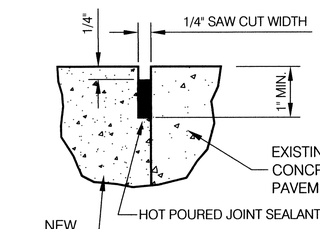

TRANSVERSE JOINT DETAIL

NOTES

1. SIGNS ARE TO BE INSTALLED AT THE SAME TIME THE CONCRETE TABLE IS INSTALLED.
2. IN SOME SITUATIONS, A TRANSVERSE JOINT MAY BE LOCATED BEYOND THE EDGE OF THE SPEED TABLE, FOR EXAMPLE: TO REPLACE ADDITIONAL PAVEMENT OR TO MATCH AN EXISTING TRANSVERSE JOINT.

1	REVISION 1/13/2011	CITY ENGINEER / PUBLIC WORKS DIRECTOR	CITY OF OMAHA — PUBLIC WORKS DEPARTMENT
			SPEED TABLE DETAILS CONCRETE SPEED TABLE
			STANDARD PLATE 6-91 — SHEET 2/3
			ISSUE DATE: ..... MAY 27, 2010

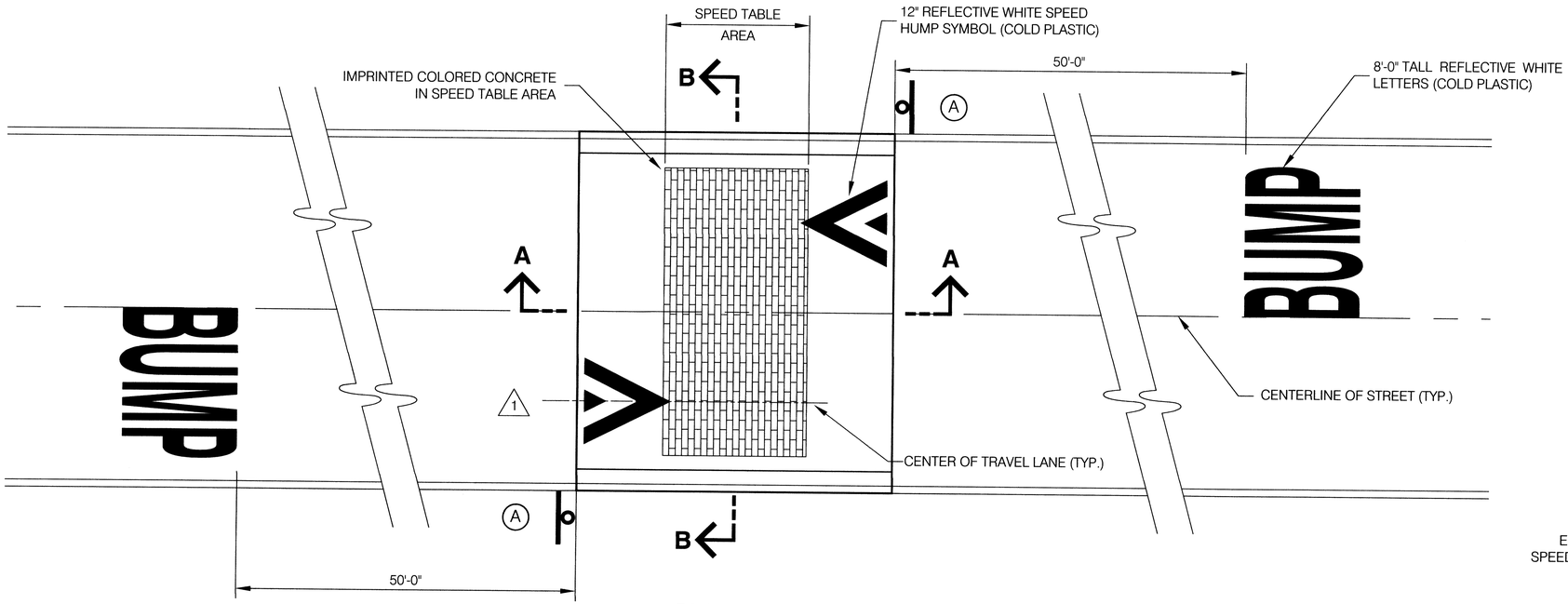

PLAN VIEW

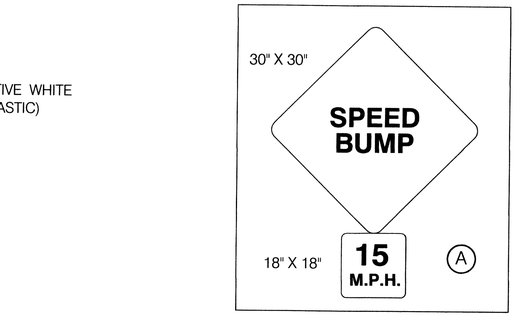

SIGNING LEGEND

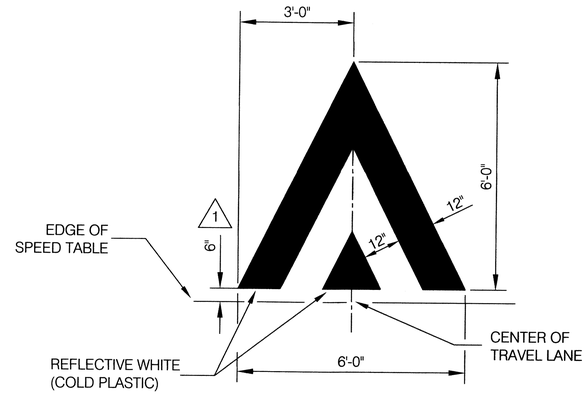

SPEED HUMP SYMBOL

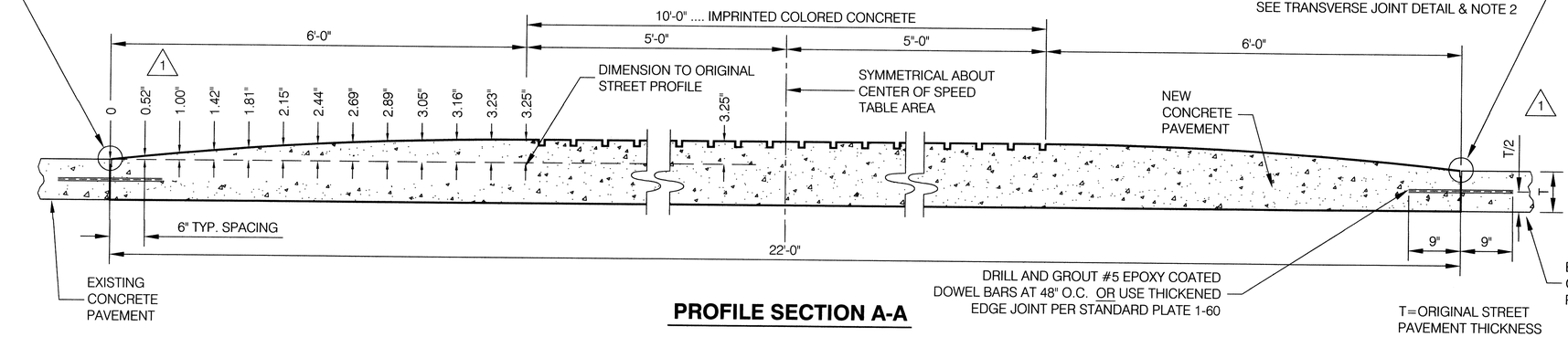

PROFILE SECTION A-A

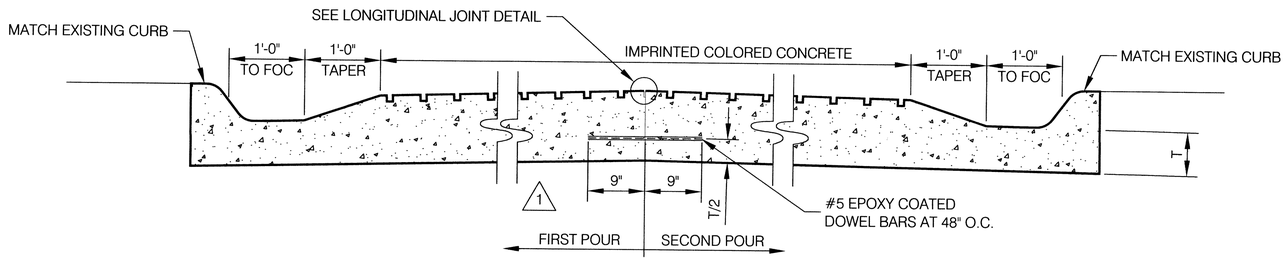

TYPICAL SECTION B-B

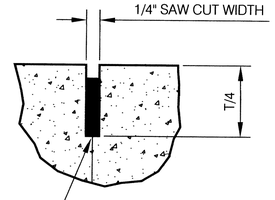

LONGITUDINAL JOINT DETAIL

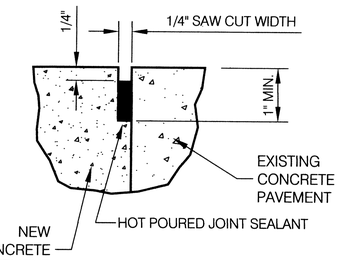

TRANSVERSE JOINT DETAIL

NOTES

1. SIGNS ARE TO BE INSTALLED AT THE SAME TIME THE CONCRETE TABLE IS INSTALLED.
2. IN SOME SITUATIONS, A TRANSVERSE JOINT MAY BE LOCATED BEYOND THE EDGE OF THE SPEED TABLE, FOR EXAMPLE: TO REPLACE ADDITIONAL PAVEMENT OR TO MATCH AN EXISTING TRANSVERSE JOINT.

1	REVISION 1/13/2011	CITY ENGINEER / PUBLIC WORKS DIRECTOR	CITY OF OMAHA — PUBLIC WORKS DEPARTMENT
			SPEED TABLE DETAILS IMPRINTED CONCRETE SPEED TABLE
			STANDARD PLATE **6-91** — SHEET 3/3
			ISSUE DATE: ..... MAY 27, 2010