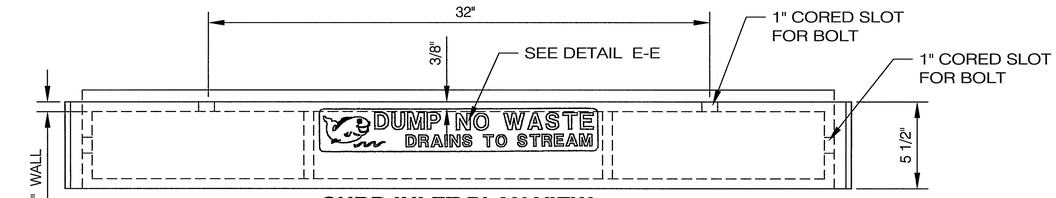

CURB INLET PLAN VIEW

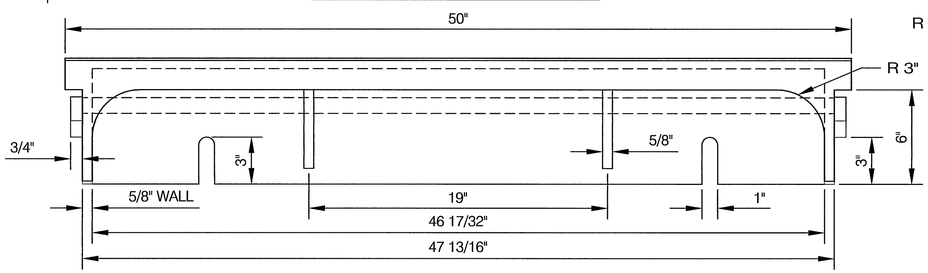

FRONT VIEW

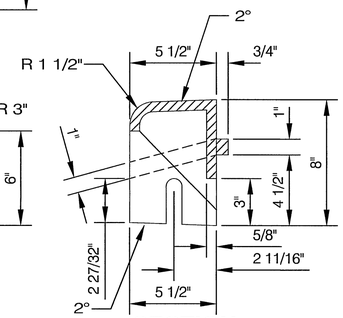

SECTION

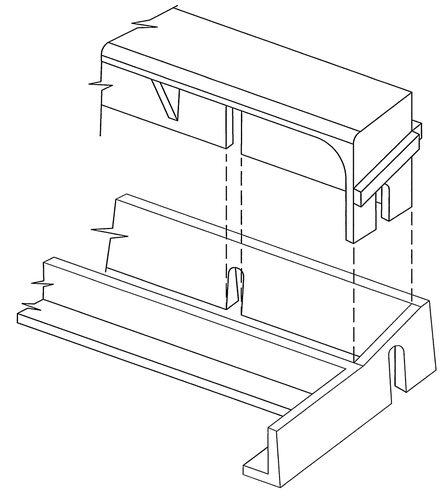

NOTES:

1. GRATE AND FRAME SHALL CONFORM TO ASTM A-48, CLASS 35B AND SECTION 702.02 OF THE "STANDARD SPECIFICATIONS".
2. WEIGHT: FRAME APPROX. 190 LBS.
   GRATE APPROX. 348 LBS.
   CURB APPROX. 160 LBS.

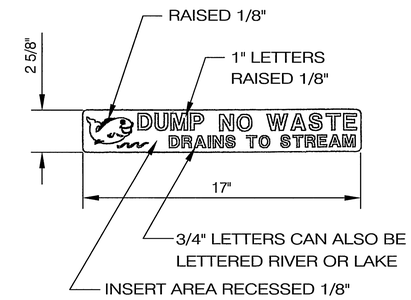

DETAIL E-E

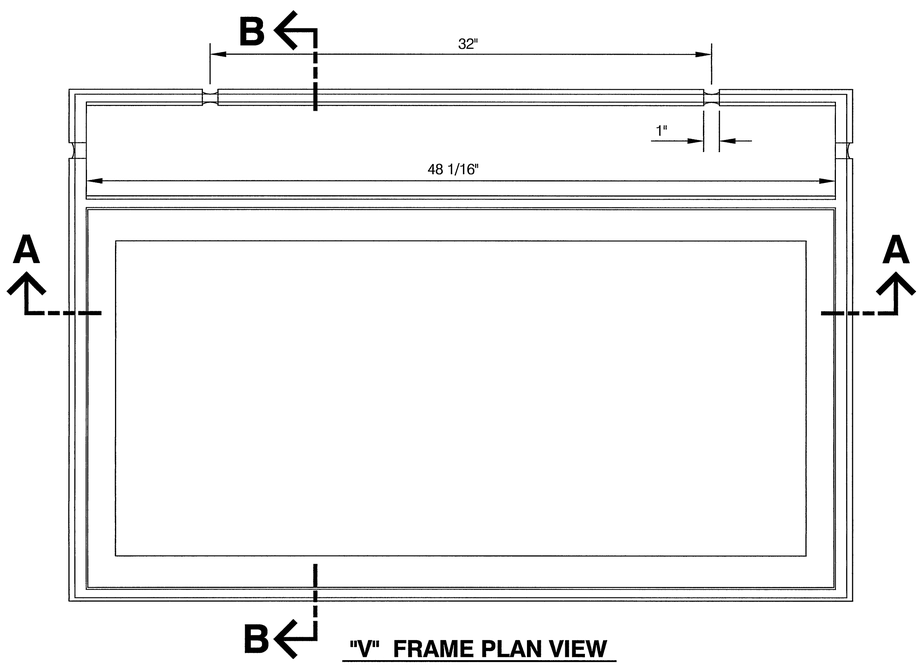

"V" FRAME PLAN VIEW

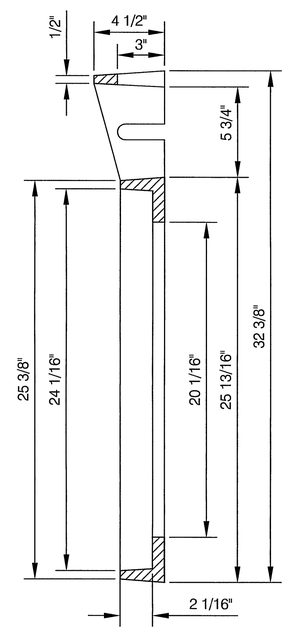

SECTION B-B

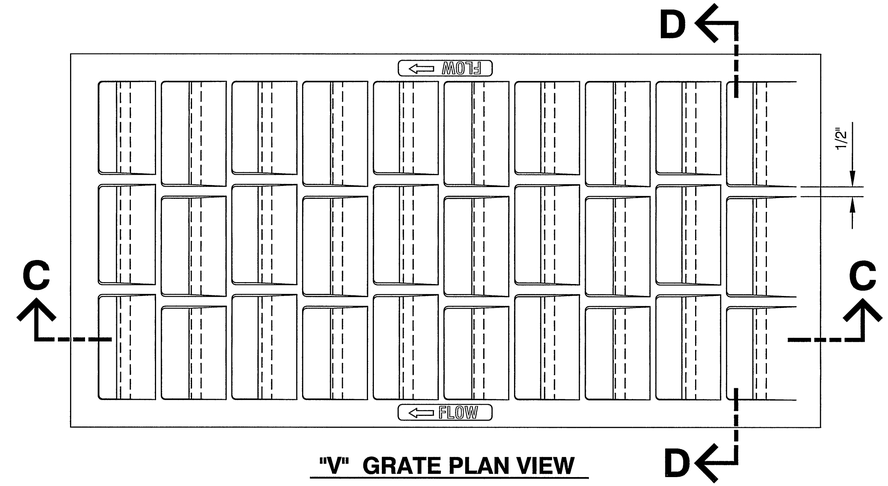

"V" GRATE PLAN VIEW

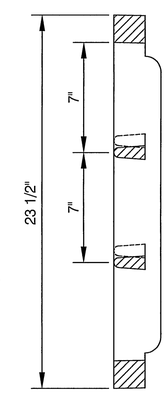

SECTION D-D

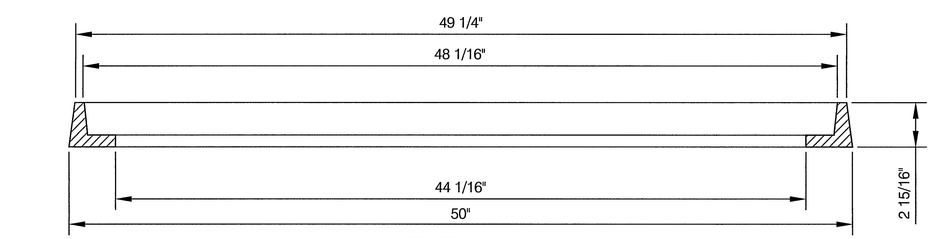

SECTION A-A

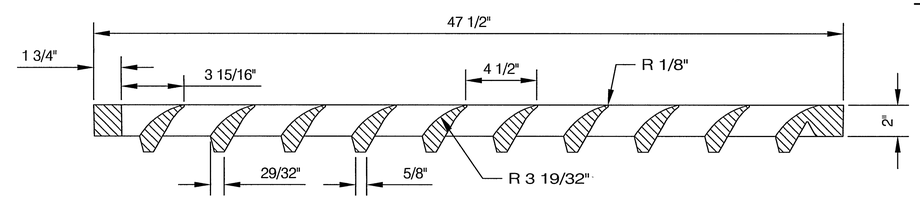

SECTION C-C

DESIGN ENGINEER CITY ENGINEER	CITY OF OMAHA PUBLIC WORKS DEPARTMENT		
	TYPE "V" CAST IRON VANE GRATE, FRAME AND CURB INLET	STANDARD PLATE **3-93**	SHEET 1/1
		ISSUE DATE: ..... MARCH 26, 2003	