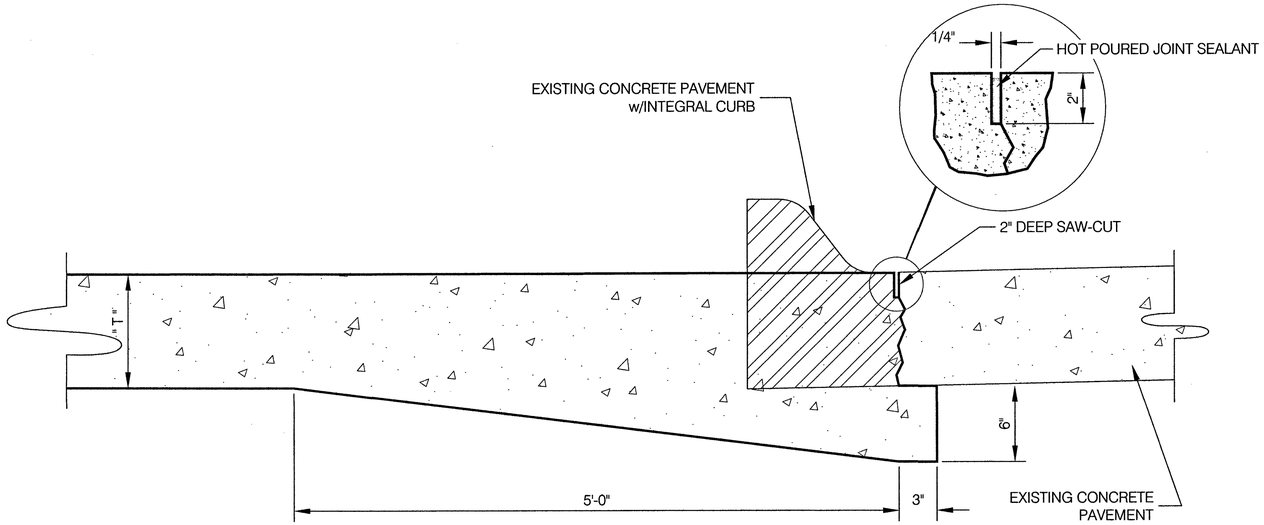

CONCRETE PAVEMENT WIDENING THICKENED EDGE JOINT

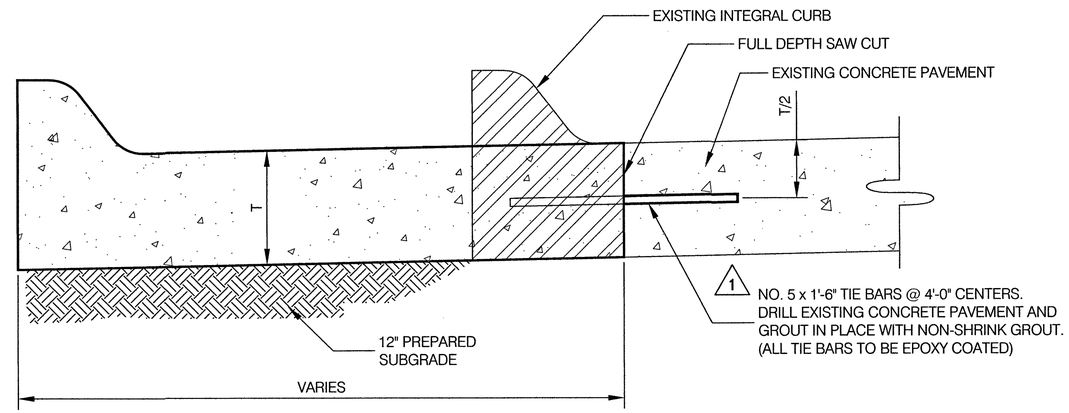

CONCRETE PAVEMENT WIDENING REINFORCED JOINT

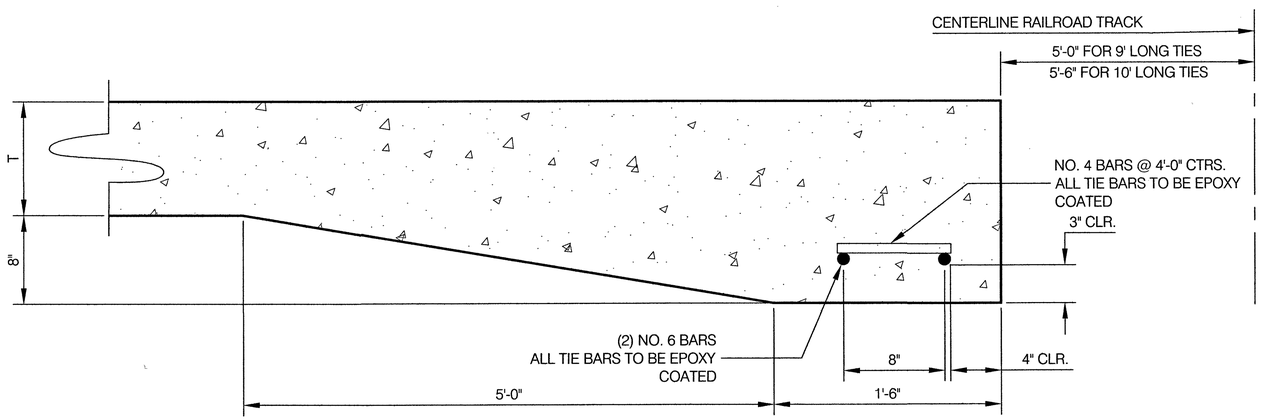

PAVEMENT BEAM AT RAILROAD CROSSING

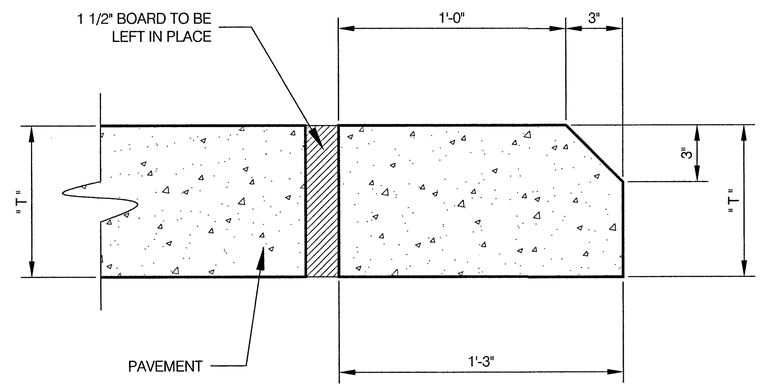

CONCRETE HEADER

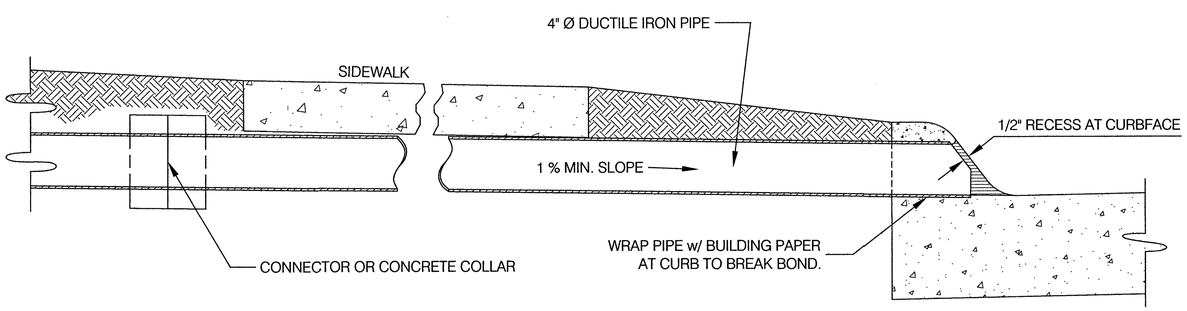

ROOF DRAIN OUTLET AT CURB

NOTES

1. CONSTRUCTION OF CONCRETE PAVEMENT AND APPURTENANCES SHALL BE IN ACCORDANCE WITH SECTION 500 OF THE STANDARD SPECIFICATIONS. PREPARE SUBGRADE IN ACCORDANCE WITH SECTION 200.
2. CONTRACTION JOINTS SHALL BE CONSTRUCTED TO MATCH LOCATIONS OF EXISTING JOINTS.
3. REINFORCING SHALL BE PLACED WITH A TOLERANCE OF -1/4" AND +1/2" ON CLEARANCE.

1	6/3/2015	DESIGN ENGINEER CITY ENGINEER	CITY OF OMAHA PUBLIC WORKS DEPARTMENT CONCRETE PAVEMENT WIDENING AND MISCELLANEOUS	STANDARD PLATE 500-60 ISSUE DATE: ..... DECEMBER 10, 2013 SHEET 1/1