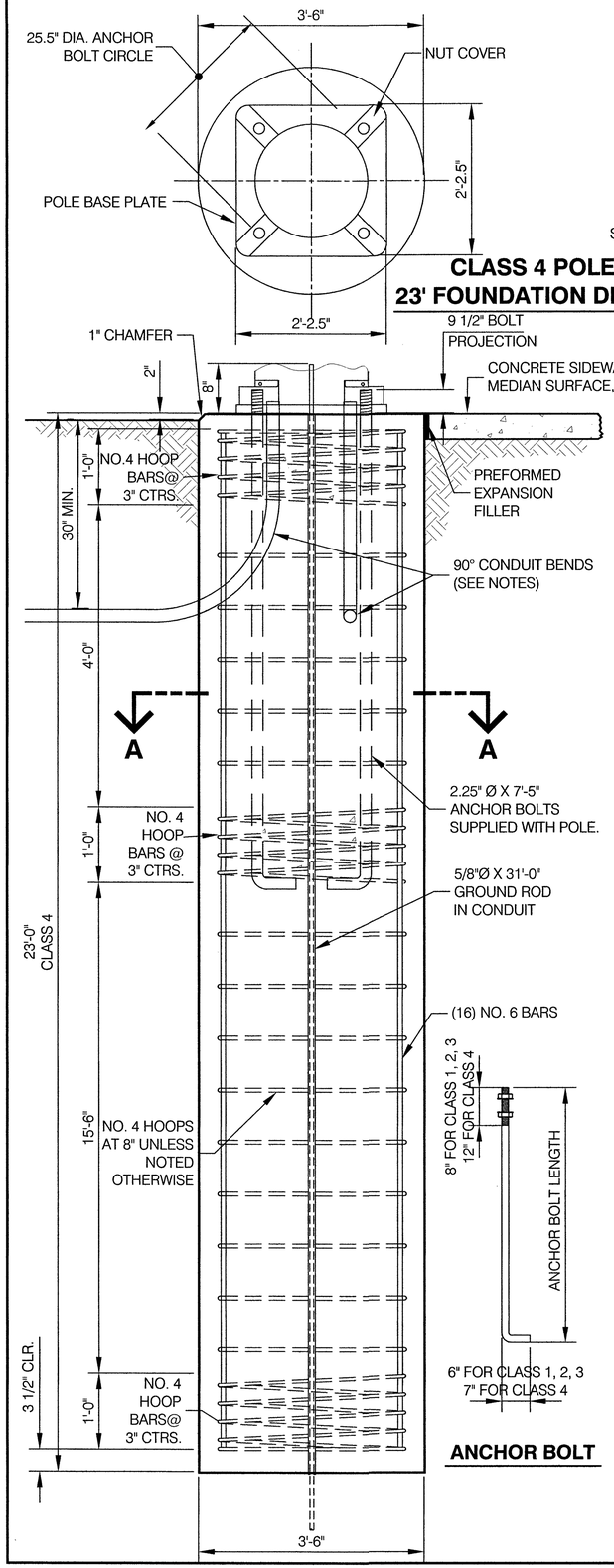

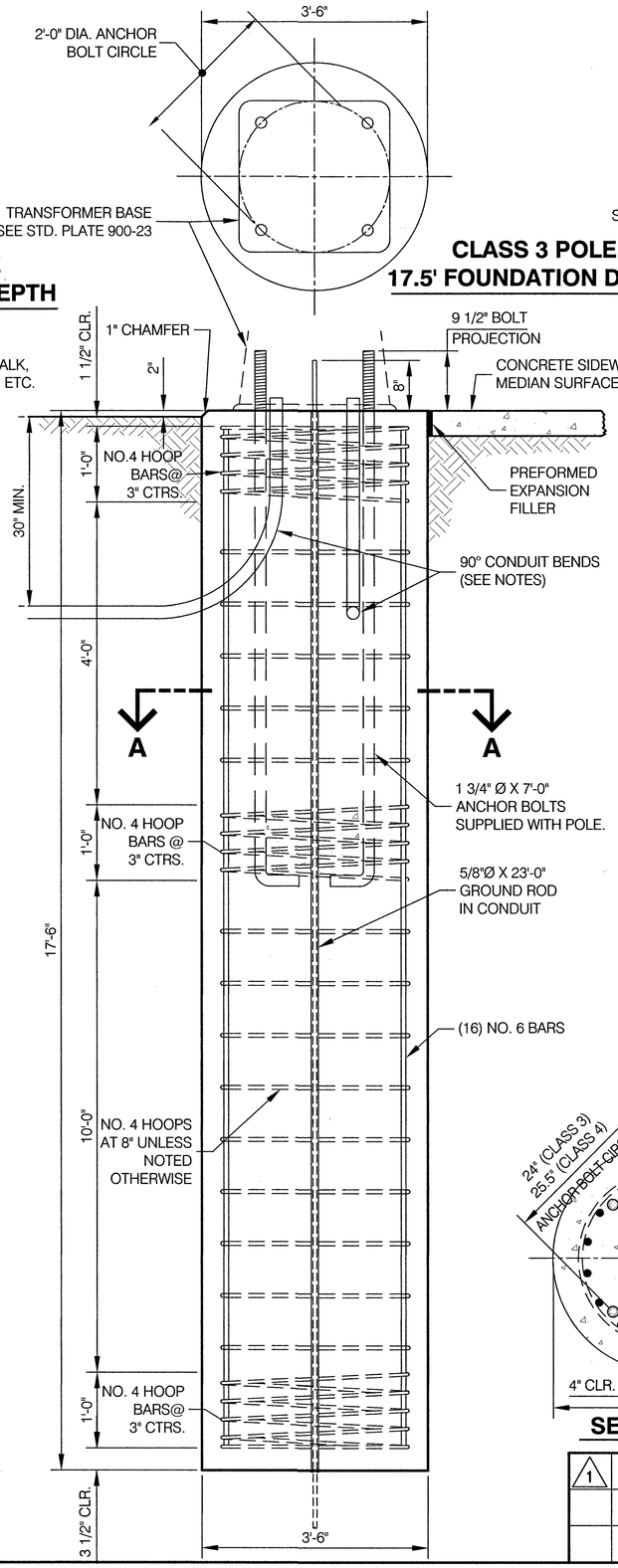

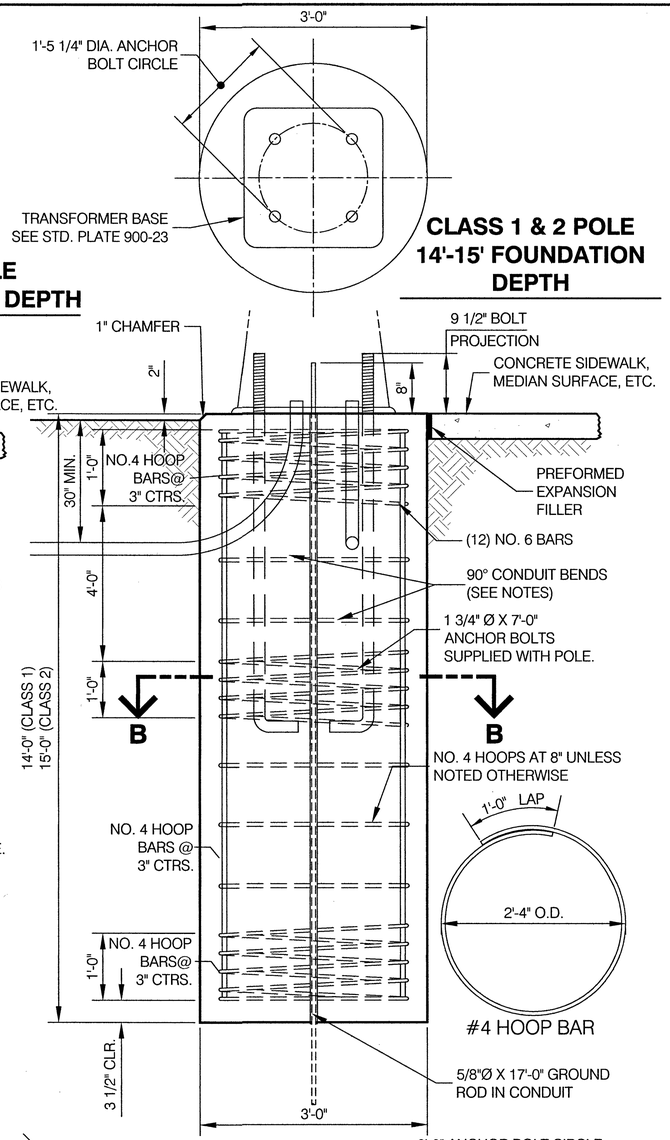

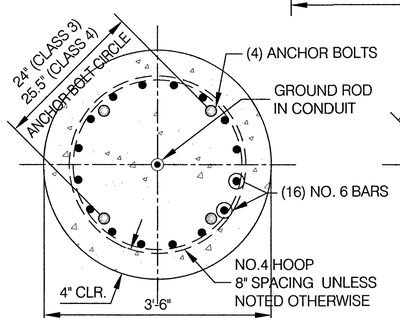

SECTION A-A

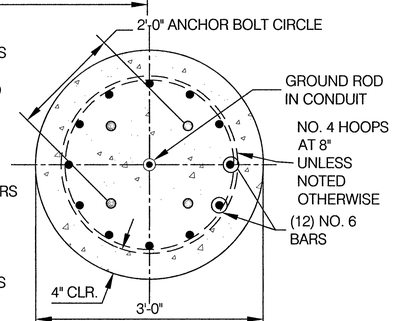

SECTION B-B

FOUNDATION NOTES ---- ALL CLASSES

POLE FOUNDATION TYPE TO BE USED SHALL BE DETERMINED FROM THE FOLLOWING:

POLE CLASS	MAST-ARM LENGTH	FOUNDATION DEPTH
CLASS 1	20 TO 30 FT.	14 FT. DEPTH
CLASS 2	35 TO 40 FT.	15 FT. DEPTH
CLASS 3	45 TO 60 FT.	17.5 FT. DEPTH
CLASS 4	65 TO 75 FT.	23 FT. DEPTH

POLE FOUNDATIONS SHALL CONFORM TO SECTION 900 OF THE STANDARD SPECIFICATIONS, UNLESS EXCEPTED IN PROJECT SPECIAL PROVISIONS. POLE FOUNDATIONS SHALL BE ROUND. ONLY THE TOP TWO FEET MAY BE FORMED.

PORTLAND CEMENT CONCRETE SHALL CONFORM TO SECTIONS 900 OF THE STANDARD SPECIFICATIONS. CONCRETE SHALL HAVE A MINIMUM 4,000 PSI 28 DAY COMPRESSIVE STRENGTH.

GROUND ROD SHALL BE PLACED PRIOR TO CONCRETE PLACEMENT. THE ROD SHALL PROJECT EIGHT INCHES MINIMUM ABOVE TOP OF FINISHED FOUNDATION AND SHALL EXTEND EIGHT FEET MINIMUM BELOW THE FOUNDATION BOTTOM.

CONDUIT SHALL PROJECT 2" ABOVE TOP OF FINISHED FOUNDATION. CONDUIT BENDS SHALL BE 90 DEGREES. CONDUIT SHALL BE LOCATED 30 INCHES MINIMUM BELOW GROUND LEVEL. SPARE CONDUITS SHALL BE INSTALLED IN EACH FOUNDATION WITH BOTH ENDS PLUGGED AND FREE OF MOISTURE CONFORMING TO THE FOLLOWING:

POLE TYPE	NO. OF SPARE CONDUIT BENDS	CONDUIT SIZE
M.P. OR C.M.P. WITH OR WITHOUT CONTROLLER	* 3	(* 3) 2"

*QUANTITY MAY BE REDUCED TO ONE WHEN STREET LIGHTING CONDUIT IS SHOWN ON CONSTRUCTION PLANS.

THE POLE FOUNDATIONS ON THIS STANDARD PLATE WERE DESIGNED IN ACCORDANCE WITH THE 2013 AASHTO STANDARD SPECIFICATIONS FOR STRUCTURAL SUPPORTS FOR HIGHWAY SIGNS, LUMINAIRES, AND TRAFFIC SIGNALS, 6TH EDITION.

ANCHOR BOLTS SHALL BE IN ACCORDANCE WITH ASTM F1554 GRADE 55 AND OF THE SIZE AND DIMENSIONS SHOWN ON THIS STANDARD PLATE. THE TOP 8 INCHES SHALL BE THREADED FOR CLASS 1, 2, AND 3 POLES. THE TOP 12 INCHES SHALL BE THREADED FOR CLASS 4 POLES. THE TOP 12 INCHES SHALL BE GALVANIZED FOR CLASS 1, 2, AND 3 POLES. THE TOP 16 INCHES SHALL BE GALVANIZED FOR CLASS 4 POLES. ANCHOR BOLTS SHALL BE SUPPLIES WITH TWO HEX NUTS AND TWO FLAT WASHERS. ANCHOR BOLTS SHALL PROJECT FROM THE FINISHED FOUNDATION GRADE BY THE FOLLOWING AMOUNT:

POLE CLASS	MIN. BOLT PROJECTION	MAX BOLT PROJECTION
CLASS 1	4.5"	5.0"
CLASS 2	4.5"	5.0"
CLASS 3	4.5"	5.0"
CLASS 4	5.0"	5.5"

STEEL REINFORCING SHALL BE IN ACCORDANCE WITH ASTM A615, NON-EPOXY COATED.

1	1/04/2017	TRAFFIC ENGINEER / CITY ENGINEER	CITY OF OMAHA — PUBLIC WORKS DEPARTMENT
			MAST ARM POLE FOUNDATION
			STANDARD PLATE 900-22 — SHEET 1/1
			ISSUE DATE: ..... DECEMBER 10, 2013