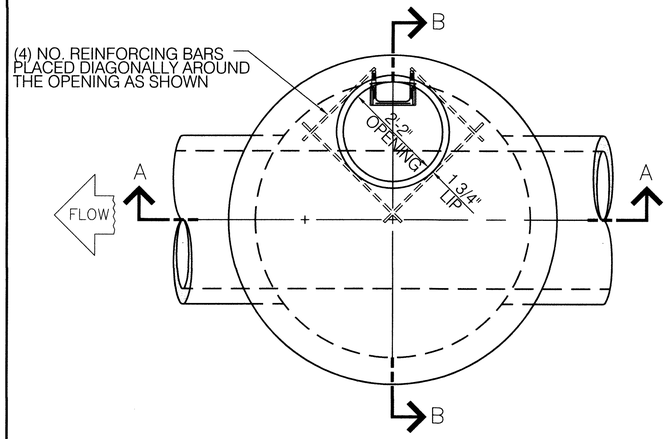

PLAN VIEW
SHOWN WITHOUT RISER SECTION

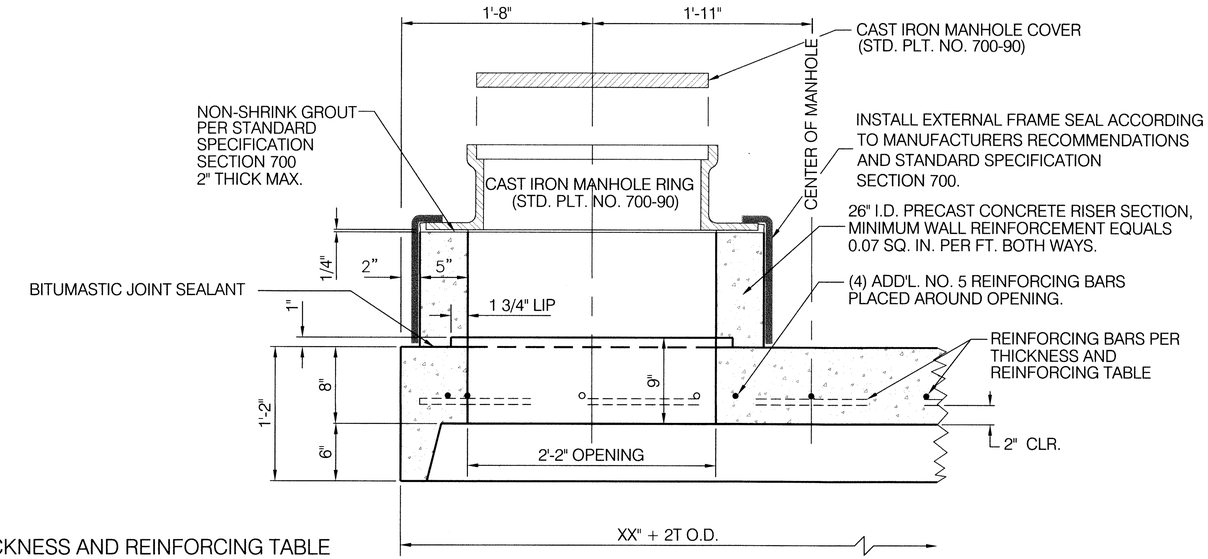

PARTIAL SECTION
REINF. CONCRETE TOP

THICKNESS AND REINFORCING TABLE

MH DIA	WALL THICK	TOP AND BOTTOM SLAB REINFORCING
XX"	T	BAR SIZE, SPACING
54"	5.5"	NO. 4 @ 6" C.-C.
60"	6"	NO. 4 @ 6" C.-C.
72"	7"	NO. 5 @ 7 1/2" C.-C.
84"	8"	NO. 5 @ 6 1/2" C.-C.
96"	9"	NO. 5 @ 6 1/2" C.-C.

NOTES

1. CONCRETE SHALL BE IN ACCORDANCE WITH SECTION 700 OF THE STANDARD SPECIFICATIONS.
2. THE INVERT OF THE MANHOLE SHALL BE MONOLITHICALLY POURED CONCRETE.
3. UNLESS OTHERWISE INDICATED IN THE CONTRACT DOCUMENTS "BIRD BATH" STYLE CAST-IN-PLACE MANHOLE BASE CONSTRUCTION SHALL BE PERMITTED.
4. WHERE REINFORCING BARS ARE USED, THE STEEL SHALL BE DEFORMED BARS. THE COVERING, MEASURED FROM THE FACE OF CONCRETE TO THE SURFACE OF ANY REINFORCING BAR SHALL BE TWO INCHES UNLESS OTHERWISE NOTED.
5. REINFORCING SHALL BE PLACED WITH A TOLERANCE OF -1/4" AND +1/2" ON CLEARANCE.
6. PRECAST CONCRETE MANHOLE SECTIONS SHALL BE MANUFACTURED IN ACCORDANCE WITH SECTION 700 OF THE STANDARD SPECIFICATIONS AND WALL THICKNESS SHALL BE AS SHOWN IN TABLE.
7. PRECAST CONCRETE MANHOLE JOINTS SHALL BE CONSTRUCTED IN ACCORDANCE WITH SECTION 700 OF THE STANDARD SPECIFICATIONS
8. PRECAST CONCRETE MANHOLES WITH PIPE OPENINGS SHALL HAVE CONCRETE COLLARS CONSTRUCTED AT THE MANHOLE CONNECTION PER STANDARD PLATE 700-23.
9. FOR MANHOLES GREATER THAN 20'-0" IN DEPTH, THE STRUCTURE SHALL BE DESIGNED BY A PROFESSIONAL ENGINEER LICENSED IN THE STATE OF NEBRASKA.
10. RISER SECTIONS SHALL BE OF THE LARGEST VERTICAL DIMENSION POSSIBLE.
11. FOR MANHOLES USING BITUMASTIC JOINT SEALANT, EXTERNAL SEALING WRAP SHALL BE INSTALLED ON EACH JOINT.

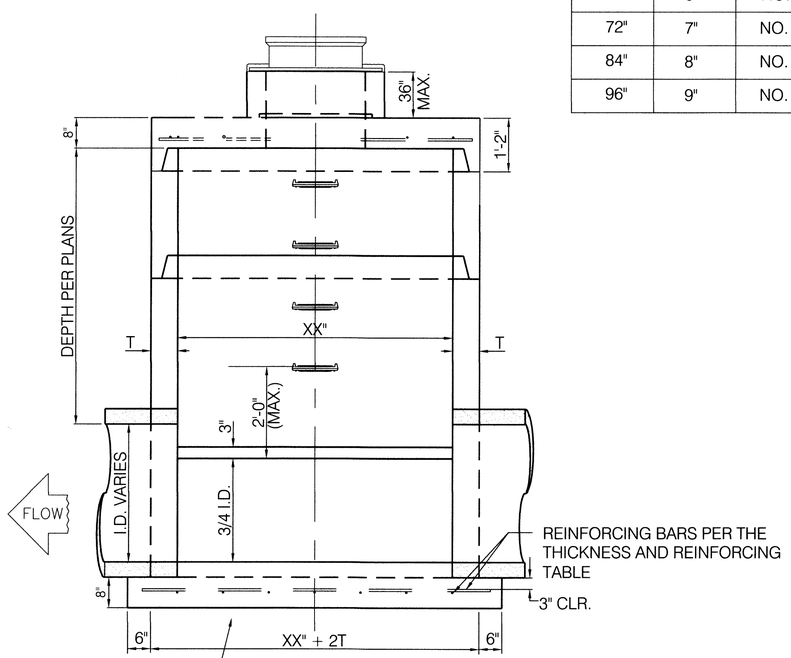

AGGREGATE BEDDING SHALL BE IN ACCORDANCE WITH STANDARD PLATE 700-01

SECTION "A-A"

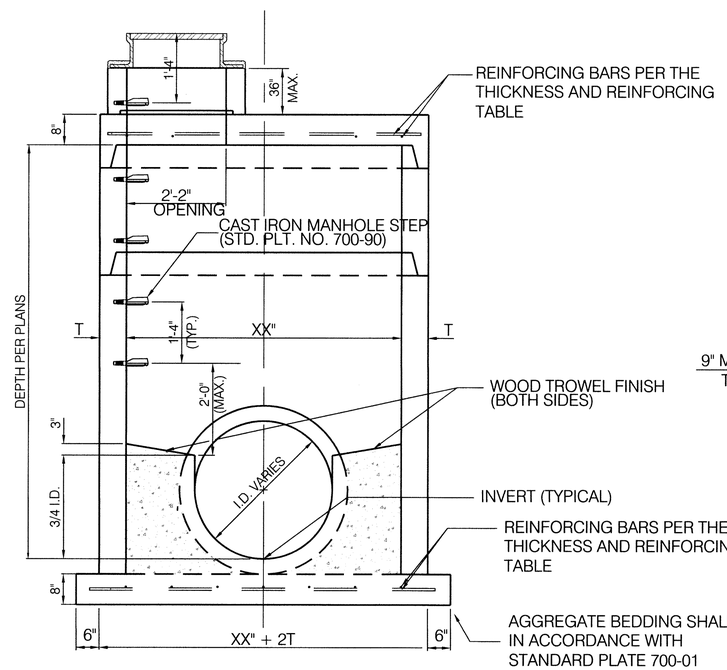

SECTION "B-B"

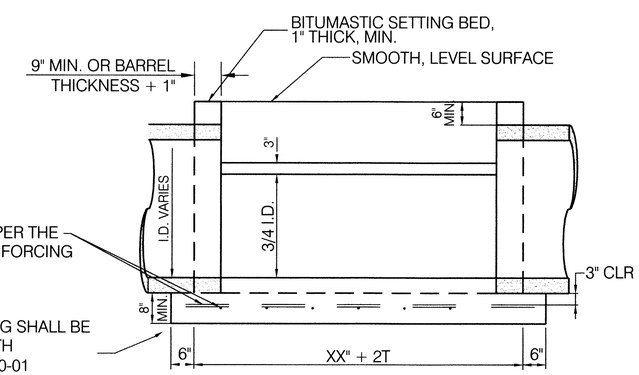

BIRDBATH DETAIL SEE NOTE 3

	DESIGN ENGINEER / CITY ENGINEER	CITY OF OMAHA PUBLIC WORKS DEPARTMENT	
		STORM SEWER MANHOLE	STANDARD PLATE 700-40 — SHEET 1/1
			ISSUE DATE: ... DECEMBER 10, 2013