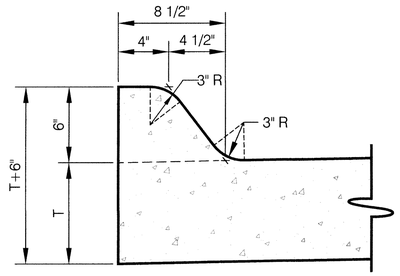

TYPE "A" INTEGRAL CURB

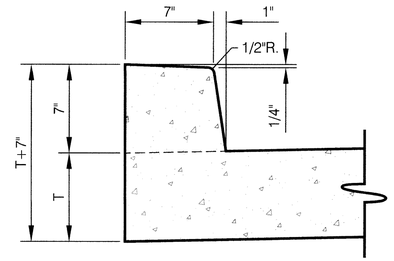

TYPE "B" INTEGRAL CURB

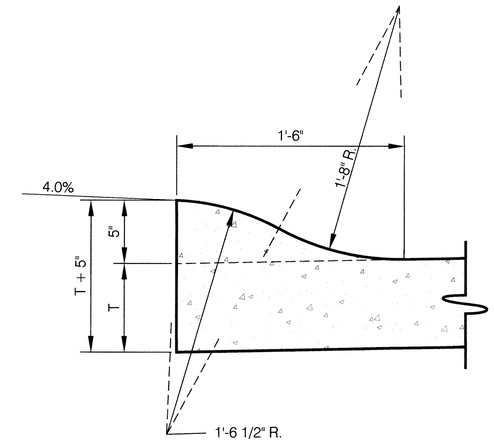

TYPE "C" INTEGRAL CURB

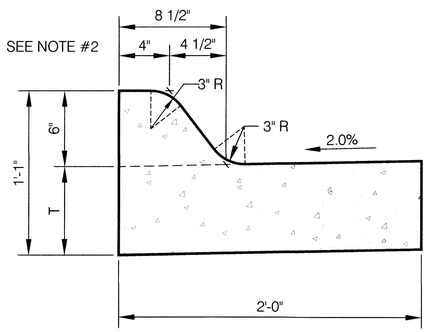

COMBINATION CURB AND GUTTER TYPICAL

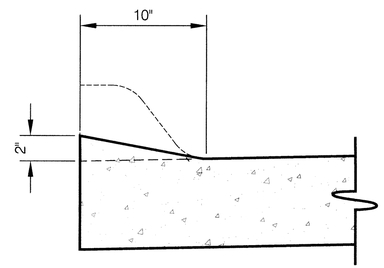

DRIVEWAY LIP CURB

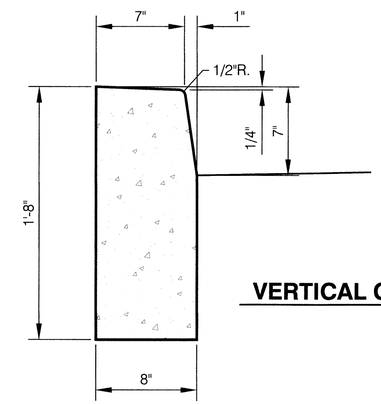

VERTICAL CURB

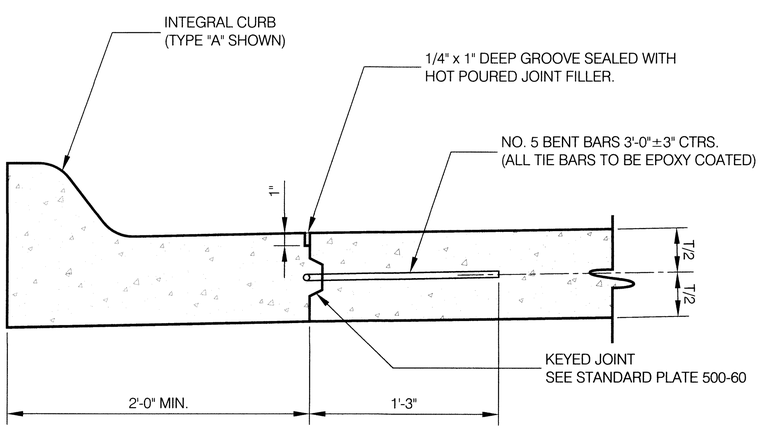

COMBINATION CURB AND GUTTER

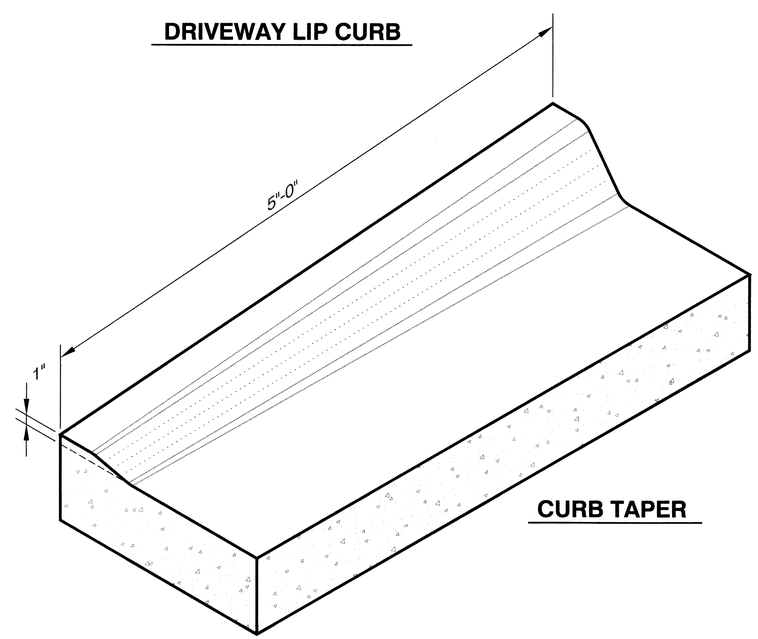

CURB TAPER

NOTES

1. INTEGRAL CURB AND COMBINATION CURB AND GUTTER CONSTRUCTION SHALL CONFORM TO SECTION 500 OF THE STANDARD SPECIFICATIONS. PREPARE SUBGRADE IN ACCORDANCE WITH SECTION 200.
2. CURB TYPE COULD BE TYPE A, TYPE B, TYPE C OR DRIVEWAY LIP.
3. AT A MINIMUM CONCRETE SHALL BE TYPE L65, UNLESS OTHERWISE INDICATED IN THE CONTRACT DOCUMENTS.

Kirk R Pfeff DESIGN ENGINEER Todd Pfeifer CITY ENGINEER	CITY OF OMAHA PUBLIC WORKS DEPARTMENT **CONCRETE CURBS**	**STANDARD PLATE 500-52**	SHEET 1/1
		ISSUE DATE: ..... DECEMBER 10, 2013	