ADDENDUM NO. 3

DATE OF ISSUE **July 1, 2015**

DATE OF ADVERTISEMENT **May 20, 2015**

DATE OF BID OPENING **August 5, 2015**

PROJECT NO.

OPW 52049

Saddle Creek Retention Treatment Basin

NOTICE TO PLAN HOLDERS:

The following revisions to the contract documents, special provisions, and plans shall be acknowledged on page P-1 of the bidder's proposal.

BID OPENING

The Bid Opening Date has been changed to **AUGUST 5, 2015.**

CONTRACT DOCUMENTS, SPECIAL PROVISIONS, AND PLANS

1. **Please see the attached for clarifications and changes.**

CITY OF OMAHA
PUBLIC WORKS DEPARTMENT BY Bibiana Decker for Project Engineer BY Bibiana Decker for Environmental Services Manager

Saddle Creek Retention Treatment Basin

CLARIFICATIONS

Provided at the end of this Addendum, and after all Addendum Attachments, is the following supplemental information:

- **Additional Bidder's Questions & Answers**

ADDENDUM NO. 3

DATE OF ISSUE:	**July 1, 2015**
DATE OF ADVERTISEMENT:	**May 20, 2015**
DATE OF BID OPENING:	**August 5, 2015**
PROJECT NO.:	**OPW 52049**

Saddle Creek Retention Treatment Basin

NOTICE TO PLAN HOLDERS:

The following revisions to the specifications and plans shall be acknowledged on page 00 301-1 of the Bidder's proposal.

I. SPECIFICATIONS – CONTRACTING REQUIREMENTS

A. Section 00 020, Page 00 020-1, RECEIPT OF BID: Delete the second paragraph of the section, starting on line 9, in its entirety and replace with the following:

"Bids will be received at the office of the City Clerk, LC-1, Omaha/Douglas Civic Center, 1819 Center Street, Omaha, Nebraska 68183, until 11:00 A.M. local time, Wednesday, August 5, 2015 and shortly thereafter, the bids will be opened publicly and read out loud."

B. Section 00 500, Page 00 500-1, Article 4, 4.2, A: Delete the entire sentence in its entirety and replace with the following:

"The Work will be substantially completed by December 31, 2018, as provided in Paragraph 2.03 of the General Conditions, and completed and ready for final payment in accordance with Paragraph 14.07 of the General Conditions by July 1, 2019."

CITY OF OMAHA
PUBLIC WORKS DEPARTMENT BY _____ BY _____
Project Engineer City Engineer
Environmental Services

C. **Section 00 550, Page 00 550-1:** Delete the second sentence of the first paragraph in its entirety and replace with the following:

"In accordance with Article 4 of the Agreement, the date of Substantial Completion is December 31, 2018, and the date of readiness for final payment is July 1, 2019."

D. **Section 00 805, Page 00 805-1, Section SC-1.01:** Delete Sections 5), 6), and 7), identified as required for substantial completion, from Section SC-1.01. All work identified under SC-1.01 for substantial completion shall be required to be completed prior to final completion.

II. TECHNICAL SPECIFICATIONS

A. **Section 03 3000:** Delete this specification in its entirety and replace with the updated specification found in **Attachment 1**.

B. **Section 08 1500:** Add the Specification Section 08 1500 Plastic Doors and Frames found in **Attachment 2**.

C. **Section 08 3323, Page 08 3323-1, Section 1.1, A, 1:** Remove the following from the first sentence:

"Fire-rated,"

D. **Section 08 3323, Page 08 3323-1, Section 1.2, B, 1:** Remove the following in all locations from the first sentence:

"Fire-Rated"

E. **Section 08 3323, Page 08 3323-2, Section 1.4, C:** Remove the following from the first sentence:

"fire-rated"

F. **Section 08 3323, Page 08 3323-4, Section 2.3, O, 1:** Delete the entire sentence in its entirety and replace with the following:

"Baked-Enamel or Powder-Coated Finish (all sides of door): Color as selected. All adjacent door components and associated elements are to be finished according to subsections 2.3, A through 2.3, N above."

G. **Section 08 3323, Page 08 3323-4, Section 2.4, A:** Remove the following in all locations from the first sentence:

"Fire-Rated"

H. **Section 08 3323, Page 08 3323-4, Section 2.4, C:** Delete Section D in its entirety.

I. **Section 08 3323, Page 08 3323-5, Section 2.4, L, 1:** Add the following sentence to the end of the first sentence of Section 1:

"All exterior exposed components, both sides of door, and door hood are to be finished as per the specification."

J. **Section 08 3323, Page 08 3323-5, Section 2.7, A, 2:** Remove the following from the first sentence:

"fire-rated"

K. **Section 08 3323, Page 08 3323-6, Section 2.9, A:** Remove the following from the first sentence:

"fire-rated"

L. **Section 08 3323, Page 08 3323-7, Section 2.12, F:** Delete the last sentence of the first paragraph.

M. **Section 08 3323, Page 08 3323-8, Section 3.2, D:** Delete Section D in its entirety.

N. **Section 14 2100, Page 14 2100-4, Section 2.4, F:** Delete the sentence in its entirety and replace with the following:

"All shaftway electrical devices to require a NEMA 4X minimum rating."

O. **Section 14 2400, Page 14 2400-3, Section 2.3, B, 1:** Delete the sentence in its entirety and replace with the following:

"Type: Holeless, beside-the-car, telescoping, three-stage."

P. **Section 14 2400, Page 14 2400-3, Section 2.3, B, 3:** Delete the sentence in its entirety and replace with the following:

"Freight Loading Class for Service Elevators: Class C."

Q. **Section 14 2400, Page 14 2400-3, Section 2.3, B, 10, a:** Delete the sentence in its entirety and replace with the following:

"Width: 7'-11" by 11'-2" minimum – Refer to floor plans for more information."

R. **Section 23 5216, Page 23 5216-4, Section 2.5, A:** Delete the sentence in its entirety and replace with the following:

"Building Management System Interface: Factory-installed hardware and software to enable building management system to monitor and control using BACnet protocol hot-water set point and display boiler status and alarms."

S. **Section 31 5000, Page 31 5000-2, Section 1.1, D, 1, j:** Delete the second sentence in its entirety and replace with the following:

"The design shall demonstrate that expected ground deformation of adjacent soil will not result in damage to existing utilities, structures, or other adjacent infrastructure."

T. **Section 31 5000, Page 31 5000-9, Section 3.11**: Delete this Section in its entirety.

U. **Section 40 0519, Page 40 0519-4, Section 2.7:** Add to this section the following:

"B. See Specification Section 09 9600 for painting of exposed pipe."

V. **Section 40 0519, Page 40 0519-4, Section 2.8, A:** Delete Paragraph A, Asphaltic Lining, in its entirety, and replace with the following:

"A. Ceramic Epoxy Lining:

1. Unless otherwise specified, pipe <u>and</u> fittings shall be lined with ceramic epoxy (i.e. Protecto 401) as specified in AWWA C151. Cured epoxy lining shall have a minimum thickness of 40-mils. Perform application by an applicator approved by the coating manufacturer, in accordance with the manufacturer's instructions and under controlled conditions at the applicator's shop or the pipe manufacturer's plant. Applicator shall submit a certified affidavit of compliance with manufacturer's instructions and requirements specified herein. Also, refer to the Process Pipe Schedule, Sheet P-18, for additional information."

W. **Section 40 0553, Page 40 0553-8, Section 2.12 MUD VALVES:** Add to this Section the following:

"H. Provide and install stem extension in combination with custom stem guides as required to support stem from nearest wall."

X. **Section 44 2705, Page 44 2705-3, Section 3.5 SCHEDULES:** Delete the phrase "See Drawings" and add the following it its place:

" Cast in Place Guides:	3 locations
Stop Log Depth:	from elevation 994 to 1016, 1' or 2' logs
Design head:	5 feet"

III. PLANS

A. **Sheet G-7:** Delete this sheet in its entirety and replace with the updated Sheet G-7. See **Attachment 3** for the reissued general sheet.

B. **Sheet C-4 & C-10:** Delete these sheets in their entirety and replace with updated Sheets C-4 & C-10. See **Attachment 4** for the reissued civil sheets.

C. **Sheet C-7A:** Add Sheet C-7A into the civil plan set following Sheet C-7. See **Attachment 4** for the new civil sheet.

D. **Sheet D-2 & D-3:** Delete these sheets in their entirety and replace with the updated Sheet D-2 & D-3. See **Attachment 5** for the reissued demolition sheets.

E. **Sheet A-5, A-6, & A-7:** Relocate the north wall of the elevator shaft 8-5/8" towards gridline a.E. The furring walls, casework, and plumbing elements adjacent to this shaft wall on second floor are to be relocated 8-5/8" towards gridline a.E as well. This change will result in a new North-South clear width inside the elevator shaft of 8'-3 5/8".

F. **Sheet A-9, Detail H:** Revise note which refers to the proposed Mapes canopy to read:

"ALUMINUM MAPES CANOPY AS BASIS OF DESIGN PRODUCT; SUPER LUMIDECK, 8" DEEP, TYPE JM FASCIA, STANDARD HANGER ROD CONFIGURATION, SOLID/BLOCK WALL MOUNT, FLAT SOFFIT DECK TYPE, BLACK ANODIZED FINISH."

G. **Sheet A-10, Details B, C, & D:** Relocate the north wall of the elevator shaft 8-5/8" towards gridline a.E. The furring walls, casework, and plumbing elements adjacent to this shaft wall on second floor are to be relocated 8-5/8" towards gridline a.E as well. This change will result in a new North-South clear width inside the elevator shaft of 8'-3 5/8".All elevator doors are to remain centered on the elevator shaft.

H. **Sheet A-18, Detail E:** Revise the dimension from second floor to the bottom of the elevator hoist beam to read "13'-2" MIN. – B.O. HOISTBEAM; VERIFY W/ MFR." The structural deck bearing elevation should be 12" minimum above the bottom of the hoist beam. Contractor to verify all required distances with the elevator manufacturer prior to installation.

I. **Sheet S-17 – S-20:** Delete these sheets in their entirety and replace with updated Sheets S-17 – S-20. See **Attachment 6** for the reissued structural plans.

J. **Sheet S-24:** Change call-out for Section 5/S-84 on south monorail beam to read "1/S-86".

K. **Sheet S-24:** Delete columns symbol shown at grid lines "a.2" and "a.3" near the mid-span of the precast girders located between column line "a.c" and the south (page bottom) side of the Chemical Building. Columns are not present between elevations 1031.50 and 1045.50.

L. **Sheet S-31, Plan 2:** Add the following to "Precast Beam" callout:

"BEAM DEPTH SHALL NOT EXCEED 48 INCHES"

M. **Sheet S-44:** Add the following note:

"VERTICAL REINFORCING FOR ALL INTERNAL CMU WALLS SHALL BE #5 AT 32", WITH MATCHING DOWELS EXTENDING FROM SUPPORTING SLAB, UNLESS NOTED OTHERWISE."

N. **Sheet P-18:** In the Slide Gate Schedule, for Gates SG-1-1 and SG-1-2, change the seating head from 30" to 5", and the unseating head from 5" to 30".

O. **Sheet P-18:** In the Process Pipe Schedule, for the Dewatering PS and the Basin locations (or rows), delete the words that read "ASPAHLT LINED, FLANGED" in the Comments column (2 locations) and replace them with:

"CERAMIC EPOXY LINED, FLANGED"

P. **Sheet M-49**: Modify the schedules as noted below.

<u>EXHAUST FAN SCHEDULE</u>:
For RF-1, change the horsepower from "2" to"3".

For RF-2, change the horsepower from "1.5" to "3".

For RF-3, add the following note in the Remarks column.

"Fan to be "spark resistant." Motor to be explosion proof."

<u>SUPPLY FAN SCHEDULE:</u>

Add the following note in the Remarks column for fans SF-1 through SF-7.

"Fans to be "spark resistant." "

<u>HVAC UNIT (ELECTRIC HTG, DX COOLING) SCHEDULE</u>:

Add the following notes to the schedule:

"1. Provide the following optional factory supplied features: Low ambient cooling down to 0 degrees F, stainless steel cabinet, phenolic coated evaporator and condenser coils, 1-inch pleated disposable air filters (provide 2 sets).

2. Provide with the following accessories to be field installed: Automatic changeover/digital programmable T-stat, Supply air grille (Bard #SG-5W brushed aluminum); Return air grille (Bard #RG-5W brushed aluminum)."

Q. **Sheets E-14 & E-67:** Delete these sheets in their entirety and replace with updated Sheets E-14 & E-67. See **Attachment 7** for the reissued electrical plans.

R. **Sheet E-60A:** Add Sheet E-60A into the civil plan set following Sheet E-60. See **Attachment 7** for the new electrical sheet.

S. **Sheet E-47:** For RF-1, change the horsepower from "2" to "3" and the full load amps from "3.4" to "4.8".

T. **Sheet E-49:** For RF-2, change the horsepower from "1.5" to "3" and the full load amps from "3" to "4.8".

ATTACHMENTS

Attachment 1: 00 3000 Cast-In-Place Concrete (20 Pages)

Attachment 2: 08 1500 Plastic Doors and Frames (5 Pages)

Attachment 3: General Sheet G-7

Attachment 4: Civil Sheets C-4, C-7A, & C-10

Attachment 5: Demolition Sheets D-2 & D-3

Attachment 6: Structural Sheets S-17 – S-20

Attachment 7: Electrical Sheets E-14, E-60A & E-67

END OF ADDENDUM

ATTACHMENT 1
00 3000 Cast-In-Place Concrete

SECTION 03 3000
CAST-IN-PLACE CONCRETE

PART 1 - GENERAL

1.1 SUMMARY

A. This Section includes all monolithic cast-in-place concrete work complete with materials, mixes, installation and testing.

1.2 QUALITY ASSURANCE

A. Furnish tests of cement and aggregates. Material sampling shall conform to the following ASTM Standards:
   1. Cement: C183.
   2. Aggregates: D75.
   3. Testing shall be in accordance with applicable ASTM Standards to assure compliance with Specifications.
   4. Make tests for the following quantities, or fraction thereof:
      a. Cement: 550 tons (500 metric ton).
      b. Fine Aggregate: 2,000 Tons (1800 metric ton).
      c. Coarse Aggregate: 2,000 Tons (1800 metric ton).
   5. Use same brand cement for any given structure produced by a single mill unless otherwise provided by authorization of the ENGINEER.

B. OWNER reserves the right to make inspections at any time at the source of supply of materials, at the place of preparation of materials, at the mixing plant if ready-mixed concrete is used, and during execution of all concrete work.

C. Ready mixed concrete supplier shall hold a current National Ready Mixed Concrete Association's Certificate of Conformance for Concrete Production Facilities. Alternatively, certification from an independent testing agent stating conformance with NRMCA "Certification of Ready Mixed Concrete Production Facilities" is acceptable.

1.3 DEFINITIONS

A. Mass Concrete: All reinforced cast-in-place concrete elements exceeding 3’-0” in thickness shall be treated as reinforced mass concrete. The mix design selection and installation of all mass concrete shall conform to the requirements of Section 8-Mass Concrete, in ACI 301, Standard Specifications for Structural Concrete.

1.4 SUBMITTALS

A. Submit Concrete Placement Drawings showing sequence of placement and the location of joints. Included shall be a schedule of the concrete pouring. The location of joints and pouring schedule shall be subject to approval by the ENGINEER.

B. The CONTRACTOR shall submit test reports for cement and aggregates to assure compliance with the Specifications.

C. Concrete mixture designs and test data shall be submitted for review by the ENGINEER with a written request for approval. No concrete shall be placed until the CONTRACTOR has received such approval in writing.

1. Each mixture report shall include:
   a. Slump on which design is based.
   b. Total gallons of water per cubic yard (l/m^3).
   c. Brand, type, composition, and quantity of cement.
   d. Brand, type, composition, and quantity of pozzolan or other mineral admixtures.
   e. Brand, type, composition, and quantity of ground granulated blast furnace slag.
   f. Specific gravity and gradation of each aggregate.
   g. Ratio of fine to total aggregates.
   h. Weight (surface dry) of each aggregate, lbs./c.y. (kg/m^3).
   i. Brand, type, ASTM designation, active chemical ingredients, and quantity of each admixture.
   j. Air content.
   k. Compressive strength based on 7-day and 28-day compression tests.
   l. Time of initial set.
   m. Water/Cement ratio

D. Submit manufacturer's literature of abrasive wear resistant floor finish and of chemical curing compound for review by the ENGINEER.

E. Submit a sample concrete delivery ticket for review by the ENGINEER. Specific requirements are further described in Article 3.06.

F. Submit tickets collected at the site of concrete placement accompanying each load of concrete. A printout system for producing these tickets in connection with automatic batching will be permitted.

G. Each ticket shall be serially numbered, show the charging time, quantity and grade of concrete, location of delivery and the signatures of inspectors at the plant and site. Transit mixed concrete tickets shall also include revolution counter reading at charging and mixing completion.

H. Submit reports of the sampling and testing of slump, air content and strength performed.

I. Submit reports of nondestructive, core and/or liquid retention testing required for acceptance of concrete in place.

J. Submit thermal control plan for structural members identified as mass concrete. The thermal control plan shall be specific to particular structural members, mix designs, and concrete placements. The thermal control plan shall address, at a minimum:

1. Mix design, including test data showing the proposed mix will meet the strength and durability performance requirements.

2. Maximum allowable concrete temperature at placement, and the anticipated range of concrete placement temperatures.

3. Maximum temperature differential that will prevent cracking during curing and heat dissipation period.

4. Placement plan indicating mass concrete placements

5. Identify methods that will be used to model and/or predict in-place concrete temperature and temperature differentials. Submit results of modeling for the range of concrete placements and conditions.

6. Identify methods for controlling maximum concrete temperature during curing

and heat dissipation period.

7. Identify methods for controlling maximum concrete temperature differential during curing and heat dissipation period.

8. Identify corrective measures that will be employed should concrete temperature or temperature differentials become excess, and or if cracking of concrete occurs.

9. Type of equipment, location, and frequency of concrete temperature measurements, if additional monitoring is required in excess of the Owner-provided instrumentation and monitoring.

1.5 WARRANTY (NOT USED)

1.6 RELATED WORK SPECIFIED ELSEWHERE

A. Section 03 1100, Concrete Forming.

B. Section 03 1500, Concrete Accessories.

C. Section 03 2000, Concrete Reinforcing.

D. Section 05 1200, Structural Steel Framing.

E. Section 05 5000, Metal Fabrications.

F. Section 31 2319, Dewatering.

1.7 REFERENCE STANDARDS

A. Unless specifically stated otherwise, the Work of this Section shall conform to the applicable portions of the latest issue of the following Codes, Specifications, and Industry Standards:

1. ACI 117: Specification for Tolerances for Concrete Construction and Materials.
2. ACI 201.2R: Guide to Durable Concrete.
3. ACI 211.1: Standard Practice for Selecting Proportions for Normal, Heavyweight, and Mass Concrete.
4. ACI 212.3R: Chemical Admixtures for Concrete.
5. ACI 222R: Protection of Metals in Concrete Against Corrosion.
6. ACI 234R: Use of Silica Fume in Concrete.
7. ACI 301: Specification for Structural Concrete.
8. ACI 302.1R: Guide for Concrete Floor and Slab Construction.
9. ACI 304R: Guide for Measuring, Mixing, Transporting, and Placing Concrete.
10. ACI 304.2R: Placing Concrete by Pumping Methods.
11. ACI 305R: Hot Weather Concreting.
12. ACI 306.1: Specification for Cold Weather Concreting.
13. ACI 306R: Cold Weather Concreting.
14. ACI 308: Standard Practice for Curing Concrete.
15. ACI 315: Details and Detailing of Concrete Reinforcement.
16. ACI 318: Building Code Requirements for Structural Concrete and Commentary.
17. ACI 347R: Guide to Formwork for Concrete.
18. ACI 350: Code Requirements for Environmental Concrete Structures.
19. ACI 350.2R: Concrete Structures for Containment of Hazardous Materials.
20. ACI 504R: Guide to Sealing Joints in Concrete Structures.
21. ACI SP-66 (94): ACI Detailing Manual.
22. ASTM A36: Standard Specification for Carbon Steel.

23. ASTM A82: Specification for Steel Wire, Plain, for Concrete Reinforcement.
24. ASTM A185: Standard Specification for Steel Welded Wire Fabric, Plain, for Concrete Reinforcement.
25. ASTM F1554: Standard Specification for Anchor Rods, Grade 36, 50 or 105.
26. ASTM A615: Specification for Deformed and Plain Billet-Steel Bars for Concrete Reinforcement.
27. ASTM C31: Standard Practice for Making and Curing Concrete Test Specimens in the Field.
28. ASTM C33: Standard Specification for Concrete Aggregates.
29. ASTM C39: Standard Test Method for Compressive Strength of Cylindrical Concrete Specimens.
30. ASTM C94: Specification for Ready-Mix Concrete.
31. ASTM C143: Standard Test Method for Slump of Hydraulic Cement Concrete.
32. ASTM C150: Specification for Portland Cement.
33. ASTM C171: Specification for Sheet Materials for Curing Concrete.
34. ASTM C172: Standard Practice for Sampling Freshly Mixed Concrete.
35. ASTM C173: Standard Test Method for Air Content of Freshly Mixed Concrete by the Volumetric Method.
36. ASTM C260: Standard Specification for Air-Entraining Admixtures for Concrete.
37. ASTM C494: Standard Specification for Chemical Admixtures for Concrete.
38. ASTM C618: Specification for Coal Fly Ash and Raw or Calcined Natural Pozzolan for Use as a Mineral Admixture in Concrete.
39. ASTM C989: Specification for Ground Granulated Blast-Furnace Slag for Use in Concrete and Mortars.
40. ASTM C1059: Specification for Latex Agents for Bonding Fresh to Hardened Concrete.
41. ASTM C1240: Specification for Silica Fume for Use as a Mineral Admixture in Hydraulic-Cement Concrete, Mortar, and Grout.
42. ASTM D1056: Specification for Flexible Cellular Materials - Sponge or Expanded Rubber.
43. ASTM D1751: Standard Specification for Pre-formed Expansion Joint Fillers for Concrete Paving and Structural Construction (Non-extruding and Resilient Bituminous types).
44. ASTM D1752: Standard Specification for Preformed Sponge Rubber and Cork Expansion Joint Fillers for Concrete Paving and Structural Construction.
45. ASTM D994: Standard Specification for Pre-formed Expansion Joint Fillers for Concrete (Bituminous Type).
46. ASTM D2103: Specification for Polyethylene Film and Sheeting.
47. ASTM E329: Standard Specification for Agencies Engaged in the Testing and/or Inspection of Materials.
48. NRMCA: (National Ready Mixed Concrete Association) Certification of Ready Mixed Concrete Production Facilities.
49. OSHA: (Occupational Safety and Hazards Administration) Construction Industry Standards: Title 29, Code of Federal Regulations, Part 1926, Safety and Health Regulations for Construction.
50. **ACI 207: Mass and Thermally Controlled Concrete**
51. **ACI 224R: Control of Cracking in Concrete Structures**

1.8 TESTING AGENCY

A. All inspections and tests required by this Section shall be performed by an independent laboratory acceptable to the ENGINEER.

1.9 ALLOWABLE TOLERANCES

A. See Section 03 1100, Concrete Forming, for the allowable tolerances for concrete surfaces.

1.10 DESIGN CRITERIA

A. Mixes shall be designed and tested for each size and gradation of aggregates and for each consistency intended for use. Design quantities and test results of each mix shall be submitted for review.

1.11 MATERIAL STORAGE AND HANDLING

A. Materials shall be stored and handled in accordance with ACI 304 and as specified below.

B. When permission is given to store cement in the open, a floor at least six (6) inches (150 mm) above the ground and a waterproof covering shall be provided and so placed as to insure runoff in case of rain.

C. Cement sacks shall be thoroughly shaken when emptying sacks into the batch. Cement salvaged by the CONTRACTOR by cleaning sacks mechanically or otherwise, or from discarded sacks of cement, shall not be used in the Work. The use of a fractional sack of cement will not be permitted unless the fractional part is measured by weight. At the time of its use in the Work, the cement shall be free from lumps.

D. No aggregates which have become intermixed prior to proportioning shall be used. Sufficient aggregate shall be available at the site to preclude the possibility of damaging delays while placing the concrete.

E. Cars used for shipping aggregates shall be clean and in good repair. The use of straw, marsh, hay or other similar materials for closing cracks or holes in cars will not be tolerated.

F. Pozzolans and other cementitious materials shall be stored and handled in the manner of cement.

G. Store and handle curing compound in a manner to prevent contamination.

1.12 ENVIRONMENTAL REQUIREMENTS

A. Environmental requirements shall be in accordance with ACI 305 for hot weather concreting and ACI 306 for cold weather concreting. Specific temperature requirements are contained in Article 2.10 of this Section for mixing and Article 3.13 of this Section for placing.

PART 2 - PRODUCTS

2.1 MANUFACTURERS (NOT USED)

2.2 MATERIALS - GENERAL

A. The materials shall meet the requirements of ACI 301, ACI 318, ASTM C33.

B. Concrete materials shall be tested and inspected as the Work progresses. The review and/or

check-test of the proposed materials, securing of production samples of materials at plant stockpiles and/or review of the manufacturer's reports for compliance will be performed at no cost to the CONTRACTOR.

C. Testing and inspection required due to substitution or change of materials requested by the CONTRACTOR shall be at the CONTRACTOR's expense.

2.3 CEMENT

A. Cement shall be the type as indicated on the Plans or as specified.
   1. Type I and IA, conforming to ASTM C150, air-entraining portland cement when special properties are not specified.
   2. Type III and IIIA, conforming to ASTM C150, air-entraining portland cement for use when high-early strength is specified.
   3. Type IS and IS-A, conforming to ASTM C595, air-entraining portland blast-furnace slag cement for use in general concrete construction.
   4. Type IP and IP-A, conforming to ASTM C595, air-entraining Portland-Pozzolan cement for use in general construction. The addition of suffix (MS) signifies that moderate sulfate resistance is specified. The addition of suffix (MH) signifies that moderate heat of hydration is specified.
   5. Supplementary Cementitious Materials:
      a. Fly ash, natural pozzolan or metakaolin: ASTM 618 Class C or F
      b. Ground granulated blast furnace slag: ASTM C989, Grade 100
      c. Silica Fume: ASTM C1240

2.4 AGGREGATES

A. Washing will be required to eliminate the dust, clay, or silt coating. Aggregates which have been washed shall not be used sooner than 24 hours after washing, unless approved by the ENGINEER.

B. Coarse aggregate shall be gravel or crushed rock, conforming to the requirements of ASTM C 33. Coarse aggregated gradation shall meet the requirements of Size #57 in ASTM C33.

C. Gravel shall consist of hard, clean, durable particles of rock or pebbles and shall be free from lumps of clay.

D. Crushed rock shall consist of angular fragments of crushed hard heads or boulders or crushed igneous rock free from weathered rock and of uniform quality.

E. All sieve and screen analyses determination of clay, silt, and dust content and percentages of objectionable particles will be based on dry weights and conform to ASTM C 33.

F. Fine aggregate shall conform to the material and gradation requirements of ASTM C 33.

G. Fine aggregates shall consist of sharp sand which shall be composed of clean, hard, durable grains and shall be free from lumps of clay and organic deleterious substances.

2.5 ADMIXTURES

A. Admixtures shall be used to achieve concrete as indicated on the Plans or specified herein. Calcium chloride shall not be used.
   1. Air-entraining, conforming to ASTM C260.
   2. Pozzolan and Fly Ash, conforming to ASTM C618, Class C or F.
   3. Water reducing, conforming to ASTM C494.

4. Retarder, conforming to ASTM C494.
5. Plasticizer, conforming to ASTM C494.
6. Ground granulated blast furnace slag conforming to ASTM C989, grade 100.

B. Abrasive wear resistant floor finish shall be packaged, dry combination of portland cement, graded quartz aggregate and dispersing agents formulated to produce an abrasive and wear resistant monolithic surface.

2.6 JOINT FILLER

A. See Section 03 1500, Concrete Accessories.

2.7 WATER

A. Water shall be free from oil, acid, alkali, organic matter, and any other deleterious substances. Water approved by the Local Board of Health may be used without testing. Water from other sources shall be tested before using.

2.8 CURING COMPOUND

A. Shall be adequate to prevent checking, cracking and loss of moisture, conforming to ASTM C309.

2.9 MIXES

A. Concrete shall consist of a mixture of air-entraining Portland cement, coarse and fine aggregate, and water with admixtures if required. Admixtures shall not be used without the ENGINEER's review. The mixture, combined in proportions, shall meet the requirements of ACI 211.1.

B. Concrete shall be classified and proportioned on the basis of minimum compressive strength at 28 days when cured in a moist room at a temperature within the range of 65 degrees to 75 degrees F (18 degrees to 24 degrees C). The desired strength of the concrete shall be shown on either the Plans or in the Specifications.

C. Table 1 shows for each grade of concrete the minimum compressive strength, cement content, and the modulus of rupture. Concrete shall be 4,000 psi, Grade 4, unless otherwise shown on the plans.

D. Aggregates shall be proportioned by weight, except for small structures and for incidental Work requiring less than ten (10) cubic yards (7 m^3) of concrete, in which case they may be proportioned by volume when approved by the ENGINEER.

E. Cement in bulk, when permitted, shall be proportioned by weight.

F. When proportioned by volume, the amount of each aggregate required for a single batch shall be measured separately and accurately. Shovel methods of measuring will not be permitted. The unit of volumetric measurement shall be one (1) cubic foot or one (1) cubic yard.

G. When proportioned by weight, the amount of each aggregate required for a single batch shall be weighed in a separate container. The equipment for weighing shall be of an approved type, and of such accuracy that there shall not be an error of more than one (1) percent in any one (1) batch.

2.10 BATCHING ADMIXTURES

A. The batching of admixtures to achieve and maintain production of the mix design of concrete

shall be in accordance with ACI 212.

B. If the air content is found to be less or greater than the specified amount, the CONTRACTOR shall immediately discontinue Work and correct the air content.

C. Decreasing the air content may be accomplished by blending air-entraining portland cement with portland cement, manufactured at the same mill, in a ratio which will reduce the air content to a value within the specified limits, this blending shall be reviewed by the ENGINEER.

D. Increasing the air content may be accomplished by adding to each batch a sufficient amount of air-entraining admixture to bring the air content up to the designed amount.

E. Pozzolan and ground granulated blast furnace slag shall be proportioned based on the mix design approved by the ENGINEER per Article 1.09 of this Section to produce watertight concrete.

F. Water Reducer can be used to reduce the water requirement of concrete to obtain consistency of slump, modify workability, increase strength or any other approved use.

2.11 TEMPERATURE LIMITS OF MIXTURE

A. The temperature of the cement, at the time of delivery to the mixer, shall not exceed 165 degrees F (74^0C). It may be required that it be stored at the CONTRACTOR's expense until cooled to that temperature.

B. The concrete temperature at time of placement shall be greater than 45deg (F) and less than 90deg (F), unless noted otherwise. For mass concrete placements, the concrete placement temperature shall be in accordance with the approved thermal control plan.

2.12 MIXERS AND MIXING

A. Concrete mixing operations shall be in accordance with ACI 304 and shall be subject to random inspection during the progress of the Work at no charge to the CONTRACTOR.

B. Central Mixed Concrete:

1. Mixers shall be capable of quickly and completely discharging without segregation or loss. The efficiency of the mixers shall be maintained at all times through repair or replacement of worn parts when necessary. They shall be provided with readily adjustable, automatic devices which will measure the cement and water within one (1) percent and admixtures within three (3) percent.
2. The drum of the mixer shall be kept free from hardened concrete and shall be completely emptied before recharging. Retempering or remixing concrete that has partially set will not be permitted. The mixer shall be cleaned thoroughly each time when out of operation for more than 1/2 hour.
3. Recommended mixing time is a minimum time of one (1) minute for one (1) cubic yard (or cubic meter), with an additional 15 seconds for each additional cubic yard (or cubic meter).
4. The concrete shall be delivered to the site in clean, tight truck bodies designed for this purpose and painted with paraffin if necessary for easy dumping. The concrete at the point of delivery shall have the proper consistency and shall be free from segregation. Mechanical agitators in the truck bodies will be required if the period of time from the mixing plant to the point of dumping exceeds 30 minutes.

5. No concrete shall be dumped if the elapsed time from the mixing plant to the point of dumping exceeds sixty (60) minutes.

C. Transit Mixed Concrete:

1. Transit-mix concrete shall be in accordance with ASTM C94. If transit-mix concrete is used, it shall meet all the foregoing requirements specified for central mixed concrete and, in addition, the following:
2. The batched materials shall be properly proportioned and in a dry state. The proper amount of water shall be added to the mixer on the trucks, and no additional water shall be added. No admixtures or accelerators shall be added except as herein noted, without the approval of the ENGINEER. Trucks shall not be loaded beyond their rated capacity and shall have mixing drums cleaned of all set-up materials at frequent intervals while in use. Trucks with leaking water valves shall not be used.
3. Recommended mixing speed should be no less than twelve (12) revolutions per minute, with a minimum of ninety (90) revolutions or until the mix is satisfactory.
4. Mixing shall be continuous after water is added to the mix in the drum, but no concrete shall be placed in the forms more than ninety (90) minutes after water is added to the mix.
5. Truck-mixed concrete shall be delivered to the site of the Work and discharged from the mixer within the maximum period of 1-1/2 hours from the first introduction of water to the mix. Any concrete which remains in the mixer after this period and any concrete which appears too stiff to be properly workable or which appears to have begun to take its initial set shall be rejected and removed from the site of the Work.
6. The OWNER may employ an independent testing laboratory to provide a qualified inspector to be present at the plant where batching of concrete occurs. The inspector shall verify the compliance of the mix with the Specifications and shall sign a form indicating the quantity of concrete and the concrete mixture of each load.

2.13 CHANGE OF MIXTURE

A. If the CONTRACTOR requests a change or substitution of approved batch proportioning, mixing, or delivery operations additional testing and/or inspection shall be at the CONTRACTOR's expense.

PART 3 - EXECUTION

3.1 EXAMINATION OF FORMWORK, REINFORCING, AND SUBGRADES

A. The CONTRACTOR shall inspect formwork, reinforcement and subgrades to confirm compliance with the related Work specified elsewhere.

3.2 PREPARATION

A. The CONTRACTOR shall notify the ENGINEER two (2) working days prior to placement of concrete.

B. Before depositing new concrete on or against existing concrete the existing concrete shall be roughened, thoroughly cleaned of foreign matter and laitance and saturated with water. The cleaned and saturated surface of the hardened concrete, including vertical and inclined surfaces, shall be coated with a bonding agent or slushed with a minimum 2-inch (50 mm) thick coating of concrete without coarse aggregate grout against which the new concrete shall

be placed before the mixture has attained its initial set.

C. Before concrete is placed in any unit, the forms and the placing and fixing of all steel and incidental items shall be complete, and the forms, steel and adjacent concrete shall be thoroughly cleaned and wetted down.

D. Where indicated on the Plans, the CONTRACTOR shall bridge the subgrade with at least 2,000 psi (13.8 MPa), 3-inch (75 mm) thick lean concrete before placing the reinforcement. This shall be at no extra cost.

E. No concrete shall be deposited in any unit until the area has been completely dewatered in accordance with Section 31 2319, Dewatering, and not until after the CONTRACTOR has made satisfactory provisions to eliminate all possibility of water entering or flowing through the concrete while it is being poured or is taking its set. No concrete shall be placed under or on water.

3.3 EMBEDDED ITEMS

A. The CONTRACTOR shall verify the location, from certified vendor or applicable Engineering drawings, of all embedded items including anchor bolts, wall sleeves, wall casting, railing post sleeves and miscellaneous pipes and conduits and shall install the items accurately at the locations determined.

3.4 BUILDING IN OTHER WORK

A. The CONTRACTOR shall make all necessary provisions in concrete Work for other Work installed by this or other CONTRACTORs, and build in all required steel beams, frames, curbs, expansion joints, inserts, hangers, pipes, floor drains, pipe trench covers and frames, anchors, sleeves, floor ducts, fiber and steel conduit, pipe hanger sockets, and all other Work furnished by either this or other CONTRACTORs.

B. The CONTRACTOR shall build in all anchors, ties, etc., specified under brick and other Work, in faces of concrete Work which are to be faced with masonry, and any other Work shown or noted to be built into concrete. In addition, the CONTRACTOR shall provide all openings and holes in concrete Work as shown or as needed to accommodate other Work.

3.5 SPECIAL CONCRETE

A. The CONTRACTOR shall verify the use and/or locations of watertight concrete and/or high-early strength concrete.

3.6 CONCRETE PLACEMENT PROCEDURE:

A. A minimum of thirty (30) days prior to any concrete delivery or placement of permanent structural concrete, the CONTRACTOR shall conduct a meeting to establish the protocol for Concrete Placement Procedures that will be carried out throughout the life of this Contract. The individuals required to attend at a minimum shall include the CONTRACTOR'S project manager, quality control representative, and concrete superintendent, a technical representative from the CONTRACTOR'S concrete supplier, and supervisory representative from the OWNER'S testing laboratory. Representatives from the OWNER and ENGINEER will also be in attendance.

B. The meeting shall not be scheduled prior to the CONTRACTOR'S receipt of all approved Division 3 Submittals.

C. Clearance to Place Concrete Checklist: The CONTRACTOR shall be responsible for initiating, providing the required information, and posting at an acceptable location, which is protected from weather and other adverse elements, the pre-placement inspection field document titled "Pour Slip", (Attachment 01).

D. Cast-in Place Concrete Delivery Ticket or "Batch Ticket": A ticket system shall be used for recording the transportation of concrete from the batching plant to point of delivery. This ticket shall be issued to the truck operator at the point of loading and given to the ENGINEER upon delivery. Submit a sample Batch Ticket in accordance with ASTM C 94 as part of the Division 3 Submittals prior to the scheduled Clearance to Place Concrete Procedures Meeting. Batch Tickets shall be written in ink or computer-printed, and are to include:

1. Load number, truck number and driver's name.
2. Design strength of concrete (compressive strength).
3. Amount of concrete (cu.yds.).
4. Time truck is charged with concrete.
5. Revolution counter reading at first addition of water.
6. Type, brand and amount of cement.
7. Type, brand and amount of admixtures.
8. Information necessary to calculate total mixing water.
9. Maximum size of aggregate.
10. Weights of fine and coarse aggregates.
11. Signature of ready-mix representative.
12. Concrete temperature at batching plant.
13. Type and amount of fly ash, GGBFS, or other pozzolan.
14. Project Identification.

E. The agenda for the Clearance to Place Concrete Procedures Meeting will include discussions of all of the documents described in this Article 3.6.

F. Field Documentation:

G. The pre-placement inspection and clearance to place concrete "Pour Slip" shall be completed and signed off by the CONTRACTOR'S representative and verified by the OWNER'S site representative prior to the commencement of any and every placement of permanent structural concrete.

H. The "Pour Slip" shall be accessible to both the CONTRACTOR'S site representative and OWNER'S site representative during all activities and phases of Work leading up to and including each concrete placement of permanent structural concrete. At the conclusion of each concrete placement, the original completed "Pour Slip" shall be submitted to the OWNER'S site representative along with all of the concrete batch tickets for that placement.

I. No concrete placements are permitted for permanent structural concrete until the Concrete Placement Procedures Meeting is conducted.

J. No activities for any phases of concrete placement for permanent structural concrete shall be initiated unless the specific "Pour Slip" for each designated concrete placement is posted in accordance as described herein and/or otherwise agreed upon in the Concrete Placement Procedures Meeting and documented as such.

3.7 CONVEYING

A. The concrete handling equipment shall be of such a nature and shall be so located that the concrete after leaving the mixer will reach its destination with a minimum lapse of time, with no segregation, and loss of slump. The use of drop chutes, except at or in the forms, is prohibited.

B. The interior hopper slope of concrete buckets shall be not less than sixty (60) degrees from the horizontal, the minimum dimension of the clear gate opening shall be at least five (5) times the nominal maximum size aggregate and the area of the gate opening shall be not less than two (2) square feet (0.2 m^2). The maximum dimension shall not be greater than twice the minimum dimension. The bucket gates shall be essentially grout tight when closed and may be manually, pneumatically or hydraulically operated except for buckets larger than two (2) cubic yards (1.5 m^3) shall not be manually operated. The design of the bucket shall provide means for positive regulation of the amount and rate of deposit of concrete in each dumping position.

C. Belt conveyors shall be designed and operated to assure a uniform flow of concrete from mixer to final place of deposit without segregation of ingredients or loss of mortar and shall be provided with positive means for preventing segregation of the concrete at the transfer points and the point of placing.

D. Concrete may be conveyed by positive displacement pump when authorized by the ENGINEER. The pumping equipment shall be piston or squeeze pressure type. The pipeline shall be rigid steel pipe or heavy duty flexible rubber hose. The inside diameter of the pipe shall be at least three (3) times the nominal maximum size coarse aggregate in the concrete mixture to be pumped. The maximum size coarse aggregate shall not be reduced to accommodate the pumps.

E. The distance to be pumped shall not exceed limits recommended by the pump manufacturer. The concrete shall be supplied to the pump continuously. When pumping is completed, concrete remaining in the pipeline shall be ejected without contamination of concrete in place. After each operation, equipment shall be thoroughly cleaned, and flushing water shall be wasted outside of the forms.

3.8 PLACING

A. All concrete shall be so deposited as to maintain the top surface level, unless otherwise shown on the Plans, and also as to avoid any appreciable flow in the mass.

B. Where placing operations involve dropping the concrete more than three (3) feet (1 m) in the forms, it shall be deposited through sheet metal or other approved spouts or pipes. These spouts or pipes shall have suitable receiving hoppers at the upper ends, and the lower ends shall be kept within six (6) inches (150 mm) of the newly placed concrete so as to prevent segregation and avoid spattering the reinforcing steel with mortar. Under no circumstances shall concrete that has partly hardened be deposited in the Work.

C. Each layer of concrete shall be plastic when covered with the following layer and the forms shall be filled at a rate of vertical rise of not less than two (2) feet (600 mm) per hour. Concrete vibrators shall penetrate the initial layer when placing the following layer. Vertical construction joints shall be provided as necessary to comply with these requirements.

D. Concrete shall be placed and compacted in wall or column forms before any reinforcing steel is placed in the system to be supported by such walls or columns. The portion of any wall or

column placed monolithically with a floor or roof slab shall not exceed six (6) feet (1.8 m) of vertical height. Concrete in walls or columns shall set at least two (2) hours before concrete is placed in the structural systems to be supported by such walls or columns.

E. Concrete shall be set when top finished. All laitance, debris, and surplus water shall be removed from concrete surfaces at tops of forms by screeding, scraping, or other effective means. Wherever the top of a wall will be exposed to weathering, the forms shall be overfilled and after the concrete has settled, the excess shall be screeded off.

F. No concrete shall be placed in contact with frozen ground. Time between charging and placement of concrete shall not exceed 1-1/2 hours.

G. Concrete shall be compacted by continuous vibrating, tamping, spading or slicing. Care shall be taken to eliminate all voids and to provide full bond on reinforcing steel and embedded fixtures. Mechanical vibration shall be employed. Concrete shall be compacted and thoroughly worked with suitable tools combined with the use of vibrators applied internally and providing a frequency not less than 7,000 revolutions per minute. All such vibrating, including the methods and equipment, shall be subject to the review of the ENGINEER.

H. The time of vibrating in any area shall only be sufficient to get efficient compaction, but shall in no case be carried to the point where there is segregation of the fine and coarse materials of the mix. There shall be an absolute minimum of direct vibration of the steel or forms during the process of vibrating. Vibrators shall be inserted and withdrawn from the concrete at numerous locations, from 18 to 30 inches (450 to 750 mm) apart, but shall not be used to transport concrete within the forms. The CONTRACTOR shall have a stand by vibrator on the job site during all concrete pouring operations.

3.9 FINISHING UNFORMED SURFACES

A. The unformed surfaces of all concrete shall be screeded and given an initial float finish followed by steel troweling.

B. Screeding shall provide a concrete surface conforming to the proper elevation and contour with all aggregates completely embedded in mortar. All screeded surfaces shall be free of surface irregularities with a height or depth in excess of 1/4 inch (5 mm) as measured from a 10-foot (3 m) straightedge.

C. Screeded surfaces shall be given an initial float finish as soon as the concrete has stiffened sufficiently for proper working. Any piece of coarse aggregate which is disturbed by the float or which causes a surface irregularity shall be removed and replaced with mortar. Initial floating shall produce a surface of uniform texture and appearance with no unnecessary working of the surface. Floating shall be performed with hand floats or suitable mechanical compactor floats.

D. Troweling shall be performed after the second floating when the surface has hardened sufficiently to prevent an excess of fines being drawn to the surface. Troweling shall produce a dense, smooth, uniform surface free from blemishes and trowel marks. The top surface of driveways and sidewalks shall be given a broomed finish after troweling.

E. Unless specified to be beveled, exposed edges of floated or troweled surfaces shall be edged with a tool having 1/4 inch (5 mm) corner radius.

F. For surfaces that are to receive coatings or linings, coordinate surface preparation requirements with the applicable specification.

3.10 FINISHING FORMED SURFACES

A. After removal of forms, the finishing of all concrete surfaces shall be started as soon as its condition will permit. Grind all seams, fins or projections flush with the concrete surface. Fill and point all honeycomb, tie holes and voids. Dampen the surface with water and apply a cement and silica sand slurry to the entire surface to fill small defects and air voids. Remove excess slurry from concrete. Surfaces to be finished shall receive an application of dry Portland cement which shall be rubbed into the slightly dampened surface with a suitable cloth.

B. After pointing and removal of projections as specified herein, exposed surfaces of concrete, including walls, columns, beams, pilasters and the undersides of slabs, shall be given a rubbed surface finish as specified herein.

C. For surfaces that are to receive coatings or linings, coordinate surface preparation requirements with the applicable specification.

3.11 FLOORS

A. Concrete floor finish shall be applied to all building floors not receiving further floor finish. At these locations, the concrete shall be brought to the proper elevation and screeded. The surface shall be given two (2) steel trowelings when the concrete has set sufficiently to finish smoothly. Floors shall be sloped uniformly toward floor drains at a slope of 1/8 inch per foot (10 mm per meter).

B. The concrete finish on steps and platforms shall be wood troweled to true and uniform surface and then steel troweled. The surface shall then be slightly roughened with a broom or by dragging burlap across the surface.

C. Concrete floors shall be finished with an abrasive resistant floor finish in the areas noted on the finish schedule on the Plans. Premixed floor hardener shall be applied to the surface of the freshly floated concrete floor, in strict accordance with the manufacturer's directions. Color to be selected by the OWNER.

3.12 JOINTS

A. Necessary construction joints are shown on the Plans. Modification of location or placement of construction joints not indicated on the Plans shall be subject to approval of the ENGINEER.

B. Expansion joint locations and details shall be as shown on the Plans. In no case shall any fixed metal be continuous through an expansion joint. Comply with the requirements of Section 03 1500, Concrete Accessories. Expansion joints shall have removable polystyrene joint caps secured to the top thereof and shall be accurately positioned and secured against displacement to clean, smooth concrete surfaces. The joint caps shall be of the size required to install filler strips at the desired level below the finished concrete surface and to form the groove for the joint sealant to the size shown on the Plans. The joint caps shall not be removed until after the concrete curing period.

C. In general, construction joints shall be located within the middle one-third of the span of slabs, beams, and girders unless a beam intersects a girder at this point, in which case the joint in the girder shall be offset a distance equal to twice the width of the beam.

D. Joints in walls and columns shall be at the underside of floors, slabs, beams, or girders and at

the tops of footings or floor slabs. Beams, girders, brackets, column capitals, haunches, and drop panels shall be placed at the same time as slabs. Joints shall be perpendicular to the main reinforcement.

E. Keyways shall be provided in all joints where required to provide for either shear or watertightness. Unless otherwise required, the width of keys shall be at least one-third the thickness of the section at that point and their depth at least one-third their width.

3.13 CONCRETE CURING

A. All concrete shall be cured for a period not less than seven (7) consecutive days. The CONTRACTOR shall have adequate equipment and curing material on the job site before concrete placement begins, and it shall be adequate to prevent checking and cracking and loss of moisture from all the surfaces of the concrete. The concrete shall be protected from rain, flowing water, wind and the direct rays of the sun. Openings in concrete shall be sealed to prevent drying of the concrete during the curing period. Early removal of formwork does not relieve the CONTRACTOR of the curing requirements specified herein.

B. Curing compounds shall not be used on surfaces to which additional concrete or other material are to be bonded.

C. Curing compounds when used shall be applied in strict accordance with the manufacturer's recommendations.

D. Concrete cured with water shall be kept wet by covering with ponded water or fog spraying to keep all surfaces continuously wet.

E. Horizontal construction joints and finished surfaces cured with sand shall be covered a minimum thickness of 1-inch (25 mm), uniformly, and kept saturated during the curing period.

F. Burlap used for curing shall be treated to resist rot and fire and free of sizing or any substances that are injurious to Portland cement or cause discoloration. Strips shall be lapped by half widths. The burlap shall be saturated with water after placement and during the curing period.

G. Straw or hay shall be in a layer no less than six (6) inches (150 mm) thick and held in place by screens, wire or other means to prevent dispersion by the wind. Care shall be observed to avoid discoloration of the concrete surface from the vegetable fibers and for the flammability of the material. The straw shall be saturated with water after placement and during the curing period.

3.14 ENVIRONMENTAL CONDITIONS

A. The CONTRACTOR shall provide cold or hot weather protection in accordance with ACI and as specified herein. There shall be no additional cost for hot or cold weather protection of the concrete.

B. Cold Weather Protection:

1. When placing concrete in cold weather, the CONTRACTOR shall plan and prosecute his Work in a manner which shall assure results free from damage through freezing, contraction, and loss of concrete strength.
2. No concrete shall be poured when the surrounding temperature is below 40 degrees F (4^0C), unless the aggregates and water are properly heated.
3. Concrete which has been poured at higher temperatures but has not attained strength

equal to 75% of the required strength of the class of concrete involved, shall be housed and protected in accordance with the provisions of this Section whenever the surrounding temperature falls below 40 degrees F (4^0C).

4. Application of heat to the materials shall be made in a manner which will keep these materials clean and free from injurious substances.
5. Aggregates may be heated only by steam coils or steam jets, except in the case of small quantities of concrete when other methods may be approved by the ENGINEER. A sufficient quantity of properly heated aggregates shall be on hand prior to starting the pouring of any unit.
6. Concrete shall be properly housed with canvas, burlap, or other windproof material in such a manner that any necessary removal of the forms or finishing of the concrete can proceed without undue damage to the concrete from the elements. Heating of the housing shall be done in a manner which will maintain a temperature between 50 degrees F and 70 degrees F (10^0 and 20^0 C), at all times for at least five (5) days after the pour is complete and twelve (12) hours before the pour begins. All supplemental heating units shall have exhaust vented to the exterior and shall not cause deleterious reactions or deposits to occur to concrete.

C. Hot Weather Protection:

1. Concrete deposited in hot weather shall not have a placing temperature that will cause difficulty from loss of slump, flash set, or cold joints. Concrete temperature shall be less than 90 degrees F (32^0C)**, or as indicated in the thermal control plan for mass concrete placements.**
2. In hot weather, suitable precautions shall be taken to avoid drying of the concrete prior to finishing operations. Use of windbreaks, sunshades, fog sprays, or other devices shall be provided.

3.15 MASS CONCRETE

A. Mass concrete shall be proportioned, placed, cured, and monitored in accordance with the approved thermal control plan.

B. Maximum internal temperature of hydration shall not exceed 158 degrees (F) at any location within the mass concrete placement.

C. Maximum temperature difference between highest internal temperature and the surface temperature shall not exceed 35 degrees (F).

D. For all mass concrete placements, a minimum of three (3) instrument sets (three (3) per set—surface #1, center of placement, and surface #2) shall be installed within the placement to monitor the internal temperature and surface temperature. The internal and surface temperatures shall be monitored and recorded using a digital data logger over the duration of the curing period, and the recorded data shall be provided to the Engineer daily. **The** instrumentation **will be furnished, installed, and monitored by the Owner at no Cost to the Contractor.** The temperatures shall be recorded at the following frequency:

1. Hourly for the first 72 hours following the concrete placement.
2. Every four (4) hours for hours 72 through 120 following the concrete placement.
3. Twice daily **for a minimum of** 168 hours following the concrete placement**, and until the measured temperature differential between the internal temperature and surface temperature is less than 35 degrees (F)**

3.16 ADDITION OF WATER

A. To increase workability, adding water to the mix shall be limited to a one time addition of one (1) gallon of water per cubic yard of concrete (5 liters per cubic meter) and mixed with a minimum of 30 revolutions at a rate of 12 to 15 revolutions per minute. Addition of water shall be within the slump requirements.

3.17 CONCRETE DELIVERY REJECTION

A. Concrete not permitted for inclusion in the Work by the ENGINEER shall be removed from the site. Rejection of concrete will be determined through concrete testing and elapsed time from mixer charging to delivery.

3.18 CONCRETE TESTING AT PLACEMENT

A. Tests shall be made of fresh concrete for each 50 cubic yards (40 m^3), or whenever consistency appears to vary. **The sampling and testing of slump, temperature, air content and strength will be performed under separate contract with the OWNER by a special inspection agency. CONTRACTOR shall be required to provide concrete and access to special inspection agency to perform testing.**

Testing performed as part of the CONTRACTOR's quality control program or verification of special inspection agency testing results will be at no cost to the OWNER and shall be made available to the ENGINEER upon request. Testing shall be in accordance with all standards and requirements provided in the contract documents.

Acceptance or rejection of concrete based upon slump, temperature, air content, or strength will be based upon the results of the special inspection agencies slump, air, temperature, or strength results.

B. Composite samples shall be secured in accordance with the Method of Sampling Fresh Concrete, ASTM C172.

C. Slump Test:
1. Slump Test shall be in accordance with ASTM C143. The CONTRACTOR shall use the least slump possible consistent with workability for proper placing of the various classifications of concrete.
2. A tolerance of up to 1-inch (25 mm) above the indicated maximum slump shall be allowed for individual batches provided the average for all batches or the most recent ten (10) batches tested, whichever is fewer, does not exceed the maximum limit.

D. Air Content:
1. Air content of normal weight concrete will be determined in accordance with Method of Test for Air Content of Freshly Mixed Concrete by the Pressure Method, ASTM C231.

E. Compressive Strength:
1. A set of cylinders for compressive strength tests will consist of four cylinders per each set. **Additional set of cylinders requested by the CONTRACTOR for early or interim breaks other than 7 or 28 day breaks will be at the cost of the CONTRACTOR.**
2. Molding and curing specimens from each set shall be in accordance with Method of Making and Curing Concrete Test Specimens in the Field, ASTM C31. Any deviations from the requirements of this Standard shall be recorded in the test report.

3. Testing specimens will be in accordance with Method of Test for Compressive Strength of Cylindrical Concrete Specimens, ASTM C39. One (1) specimen shall be tested at seven (7) days for information and two (2) shall be tested at 28 days for acceptance. The acceptance test results shall be the average of the strengths of the two (2) specimens tested at 28 days. If one (1) specimen in a test manifests evidence of improper sampling, molding or testing, it shall be discarded and the strength of the remaining cylinder shall be considered the test result.
4. The strength level of the concrete will be considered satisfactory so long as the averages of all 28 day strength test results equal or exceed the specified 28-day strength and no individual strength test result falls below the specified 28-day strength by more than 500 psi (3.4 MPa).
5. If the strength test is not acceptable, further testing shall be performed at the CONTRACTOR'S expense to qualify the concrete.
6. The temperature of concrete sample will be determined for each strength test.

3.19 TESTING OF CONCRETE IN PLACE

A. Additional testing of materials or concrete occasioned by their failure by test or inspection to meet specification requirements shall be at the expense of the CONTRACTOR.

B. Testing by impact hammer, sonoscope, or other nondestructive device may be permitted by the ENGINEER to determine relative strengths at various locations in the structure as an aid in evaluating concrete strength in place or for selecting areas to be cored. Such tests, unless properly calibrated and correlated with other test data, shall not be used as a basis for acceptance or rejection.

C. When required by the ENGINEER, cores at least two (2) inches (50 mm) in diameter shall be obtained and tested in accordance with Methods of Obtaining and Testing Drilled Cores and Sawed Beams of Concrete, ASTM C42. If the concrete in the structure will be dry under service conditions, the cores shall be air dried (temperature 60 degrees to 80 degrees F (15° - 25° C), relative humidity less than 60%) for seven (7) days before test and shall be tested dry. If the concrete in the structure will be more than superficially wet under service conditions, the cores shall be tested after moisture conditioning in accordance with ASTM C42.

D. At least three (3) representative cores shall be taken from each member or area of concrete in place that is considered potentially deficient. The location of cores shall be determined by the ENGINEER so as to least impair the strength of the structure. If, before testing, one or more of the cores shows evidence of having been damaged subsequent to or during removal from the structure, it shall be replaced.

E. Concrete in the area represented by a core test will be considered adequate if the average strength of the cores is equal to at least 85% of and if no single core is less than 75% of the specified 28-day strength.

F. Core holes shall be filled by low slump concrete or mortar.

3.20 DEFECTIVE CONCRETE

A. If, in the opinion of the ENGINEER, the defects in the concrete are of such a nature as to warrant condemnation, that portion of the pour may be ordered replaced in its entirety and the CONTRACTOR shall promptly replace same without additional compensation.

B. Defective concrete shall be repaired by cutting out the defective area and placing new concrete which shall be formed with keys, dovetails or anchors to attach it securely in place.

TABLE 1 - CONCRETE MIXTURES

Concrete Grade	Fine Aggregate	Coarse Aggregate	Min Cementitious Material Content				Minimum Comprehensive Strength At 28 Days (PSI/MPa)	Minimum Modulus of Rupture At 28 Days (PSI/MPa)	Air Content %	Slump at point of placement (inches) **	Water/ Cementitious Material Ratio (by weight, max)
			Type of Cement	Lbs. per C.Y.	Sacks per C.Y.	Kg per m^3					
5	ASTM C 33		I, IA IS, ISA	610	6.5	362	5,000/34.0	750/5.2	4-6	2-4	0.40
4		ASTM C 33, size #57	I, IA, IS, IS-A	611	6.5	362	4,000/ 28.0	700 / 4.8	4 - 6	2-4	0.44
CLSM	ASTM C 33	NA	I, IA, IS, ISA	38-282	0.4-3	22-166	50-100/.34-0.67	NA	NA	NA	040-0.75

- **Maximum water cementitious material ratio shall be 0.45, unless otherwise noted.**
- **Structural concrete for walls and slabs shall be placed with a slump of four (4) inches (100 mm) maximum.**
- **Ground granulated blast furnace slag (GGBFS) may be substituted for cement on a pound for pound basis from a minimum of 25% up to a maximum of 75% GGBFS.**
- **Fly ash may be substituted for cement on a pound for pound basis up to a maximum of 50% fly ash.**
- **Silica fume may be substituted for cement on a pound for pound basis up to a maximum of 10% silica fume.**
-

Attachment 01- "POUR SLIP"

CLEARANCE TO PLACE CONCRETE

Scheduled Placement Date: _____

Placement Identification: _____

Drawing Sheet No.: _____ Testing Report No. _____

ACTIVITY	**CONTRACTOR VERIFICATION**	
	INITIAL	**DATE**
Construction/Joint Preparation		
Forms – Alignment		
Grade		
Cleaned and Oiled		
Reinforcement		
Water Stop/Keyway		
Embeds and Penetrations		
Weather Protection		
Final Clean-up		

Est. Vol. Concrete Required: _____

Actual Placement Date: _____ Inspector: _____

Placement Started: _____ Completed: _____

Est. Vol. Concrete Delivered: _____ Est. Vol. Wasted: _____

Concrete Supplied by: _____ Mix : _____

Remarks: _____

ENGINEER Representative	**Date**	**CONTRACTOR Representative**	**Date**

END OF SECTION

ATTACHMENT 2
08 1500 Plastic Doors and Frames

SECTION 08 1500
PLASTIC DOORS AND FRAMES

PART 1 - GENERAL

1.1 SUMMARY

A. Section Includes:
   1. Fire rated fiberglass reinforced plastic (FRP) doors and frames.

B. Related Sections:
   2. Section 03 3000: Cast-In-Place Concrete: Placement of jamb anchors in concrete.
   3. Section 04 2000: Unit Masonry: Placement of jamb anchors into wall construction.
   4. Section 07 9200: Joint Sealants: Perimeter sealant to adjacent construction.
   5. Section 08 7100: Hardware: Door hardware. Shop installation of hardware.
   6. Section 08 8000: Glazing: Glass for door lights.
   7. Section 09 2216.23: Gypsum Board Shaft Wall Assemblies; Placement of jamb anchors into wall construction.

1.2 QUALITY ASSURANCE

C. Conform to requirements of SDI-100, ANSI A117.1, ADAAG and UFAS.

D. Flame spread: All fiberglass reinforced resin component parts, including the gel coat finish, to achieve a flame spread classification of 25 or less per ASTM E84 and shall be self-extinguishing per ASTM D635.

E. References:
   1. American National Standards Institute, (ANSI):
      a. ANSI A117.1 - Specifications for Making Buildings and Facilities Accessible to and Usable by Physically Handicapped People.
   2. American Society for Testing and Materials, (ASTM):
      a. ASTM C236 - Test Method for Steady-State Thermal Performance of Building Assemblies by Means of a Guarded Hot Box.
      b. ASTM D635 - Test Method for Rate of Burning and/or Extent and Time of Burning of Self-Supporting Plastics in a Horizontal Position.
      c. ASTM E84 - Test Method for Surface Burning Characteristics of Building Materials.
      d. ASTM E90 - Standard Test Method for Laboratory Measurement of Airborne Sound Transmission Loss for Buildings.
      e. ASTM E152 - Standard Methods of Fire Tests of Door Assemblies.
      f. ASTM E413- Classification for Rating Sound Insulation.
      g. ASTM D527 – Standard Test Method for Specular Gloss.
      h. NFPA 252 – Standard Methods of Five Test of Door Assemblies.
      i. UL 10B – Standard for Five Test of Door Assemblies.

F. Steel Door Institute:
   1. SDI-100 - Standard Steel Doors and Frames.

G. Code of Federal Regulations:
   1. 28 CFR Part 36, Appendix A - ADAAG - Americans with Disabilities Act Accessibility Guidelines.
   2. 41 CFR Part 101, Subpart 101-19.6, Appendix A - UFAS - Uniform Federal Accessibility Standards.

1.3 DEFINITIONS (NOT USED)

1.4 SUBMITTALS

A. Section 01 340 - Submittals: Requirements for submittals.

B. Shop Drawings: Indicate door and frame elevations, internal reinforcement, closure method, cutouts for glazing, fiberglass content and resins, and finish.

C. Product Data: Indicate door and frame configurations, anchor types and spacing, and location of cutouts for hardware reinforcement.

D. Samples: Submit two samples of door and frame face material, 6 x 6 inch (150 x 150 mm) in size illustrating selected colors and surface texture.

E. Manufacturer's Installation Instructions: Indicate special installation requirements.

F. Manufacturer's Certificate: Certify that Products meet or exceed specified requirements.

1.5 WARRANTY

A. General Warranty: Refer to Article 6.19 of General Conditions.

B. Provide manufacturer’s standard ten (10) year warranty.

C. Warranty: Include coverage against failure due to corrosion.

1.6 OPERATION AND MAINTENANCE DATA

A. Section 01 340 - Submittals: Provisions for submittal of operation and maintenance data.

B. Operation Data: Include description of hardware operation, and adjusting requirements.

C. Maintenance Data: Identify door, and frame, and hardware maintenance requirements.

1.7 QUALIFICATIONS

A. Manufacturer: Company specializing in manufacturing the Products specified in this Section with documented experience.

1.8 FIELD MEASUREMENTS

A. Verify that field measurements are as indicated on shop drawings.

1.9 DELIVERY, STORAGE, AND HANDLING

A. Section 01 060 – Special Conditions: material delivery, storage and handling requirements.

B. Accept doors and frames on site. Inspect for damage.

C. Store doors and frames vertically with the least possible angle. Do not stack doors and frames horizontally.

1.10 COORDINATION

A. Section 01 100 – Summary of Work and Coordination: Coordination and project conditions.

B. Coordinate the Work with door and frame opening construction, door, frame, and hardware installation.

PART 2 - PRODUCTS

2.1 MANUFACTURERS - DOORS AND FRAMES

A. Manufacturers:
   1. Special Lite FR Series.
   2. Chase Doors FIB-R-DOR
   3. Substitutions: Section 01 640 - Product Substitutions.

2.2 DOORS AND FRAMES

A. Interior Doors and Frames (Fire Rated): SDI-100 Grade III Model 1, 90 minute rated.

B. Doors and Frames: Flush construction having no seams or cracks; nominal 1-3/4 inch (44 mm) thick.

2.3 DOOR AND FRAME CONSTRUCTION

A. Materials: Standard face sheets shall be manufactured using a corrosion resistant resin system with light stabilizing additives. The resin shall be reinforced with fiberglass, 40 percent by weight.

B. Stiles and Rails: Polyester based resin reinforced with 1/4 inch chopped glass strands and aerosol shall be used for reinforcements and corner blocks, etc.; 1-1/2 inch (38 mm) square pultruded tube; primary support for hardware accessories and attachments and door face sheets; required mortises provided by the door manufacturer The bottom rail shall allow 1-1/4 inches of height alterability without loss of panel's integrity.

C. Face Sheets: One (1) continuous piece; nominal 0.120 inch (2.8 3.2 mm) thick.

D. Frames: Pultruded fabrication for knock down field assembly; butted mitered corner connection. Fabricate frames to suit masonry wall coursing with 2 inch (50 mm) head member. Jamb Depth: Refer to frame schedule for exact sizes. FRP satin finish gel coated to match door color.

E. Core: All voids completely filled; Glass reinforced gypsum with fire stop blocking.

F. Reinforcement: Manufacturers standard door and frame internal reinforcing and compression members required to accommodate the hardware as indicated on Drawings and as specified in Section 08 7100 below and to resist typical thru-bolt torque while maintaining the sealed integrity of the door.

2.4 ACCESSORIES

A. Jamb Anchors: Existing wall type. T-strap Wire anchor for masonry construction.

B. Removable Stops.

C. Astragals: Manufacturers standard manufactured specifically for double doors.

D. Silencers: Provide three single silencers for single doors and each side of center mullions of double doors on strike side. Provide two (2) single silencers on frame head at double doors without mullions.

E. Fasteners: Provide stainless steel fasteners as required for glazing openings.

F. Glazing: Glass support structures shall ensure that the glass area is weathersealed as not to permit moisture to enter the core of the door. This is to be accomplished by utilizing pultruded FRP tubes to fabricate the window opening. Glazing must allow for ready access for repair, in the event of damage or replacement, without affecting the sealed integrity of the cutout in the door panel itself. Openings cut directly into the core material will not be allowed.

2.5 FINISHES

A. Door and Frame: Gel coat finish; 25 mil color impregnated gel coat.

B. Color: As selected from manufacturer's standard colors.

C. Smooth, seamless finish.

2.6 FABRICATION

A. Fabricate FRP doors and frames as shown on the drawings and in accordance with best shop practices. Frames shall be rigid, neat in appearance and free from defects. Field measurements shall be taken as required for coordination with adjoining work.

B. Form exposed surfaces free from warp, wave and buckle, with all corners square, unless otherwise shown. Set each member in proper alignment and relationship to other members with all surfaces straight and in a true plane.

C. Reinforce members and joints with plates, tubes or angles for rigidity and strength.

D. Doors and frames shall be mortised and reinforced for hardware in accordance with the hardware manufacturer's instructions and templates. The reinforcing shall be designed to receive hinges, locks, strikes, closures.

E. Mortar guard boxes shall be provided for hardware cutouts in frames.

F. Furnish at least three (3) metal anchors or polymer spacers in each jamb of frames up to 84" high and one (1) additional anchor for each 24" in height above 84", in shapes, sizes and spacing shown or required for anchorage into adjoining wall construction. Fabricate joint anchor of stainless steel.

G. Terminate bottom of frames at the indicated finished floor level.

H. Provide clearance for doors of 1/8" at jambs and heads; 1/4" clearance above threshold.

PART 3 - EXECUTION

3.1 EXAMINATION

A. Section 01 100, Administrative Requirements: Coordination and project conditions.

B. Verify that opening sizes and tolerances are acceptable.

3.2 PREPARATION

A. Provide anchors for placement by Section 03 3000 and 04 2000.

3.3 INSTALLATION

A. Install doors, transoms, and frames in accordance with manufacturer's written instructions.

B. Coordinate with masonry wall construction for anchor placement.

C. Coordinate with installation of glass and glazing specified in Section 08 8000.

D. Touch-up minor damaged surfaces caused during installation as recommended by the manufacturer.

E. Install door hardware as specified in Section 08 7100.

3.4 ERECTION TOLERANCES

A. Maximum Diagonal Distortion: 1/16 inch (1.5 mm) measured with straight edges, crossed corner to corner.

3.5 ADJUSTING

A. Adjust door for smooth and balanced door movement.

END OF SECTION

ATTACHMENT 3
General Sheet G-7

MINIMUM DESIGN PRESSURES DUE TO SOIL AND WATER

FLEXIBLE SYSTEMS

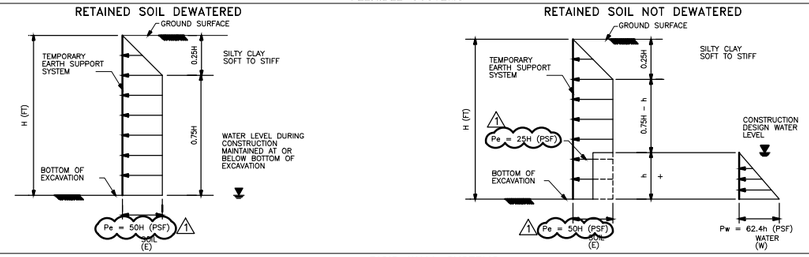

RIGID WALL SYSTEMS

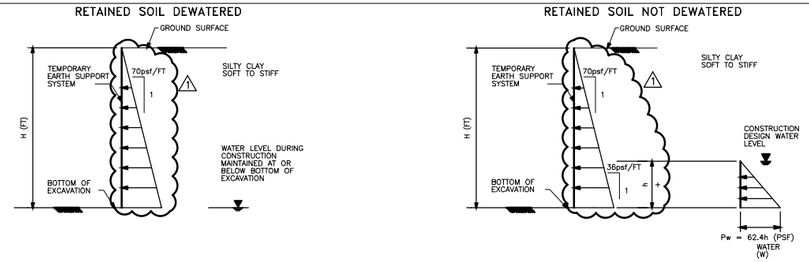

UNIFORM RECTANGULAR LOAD

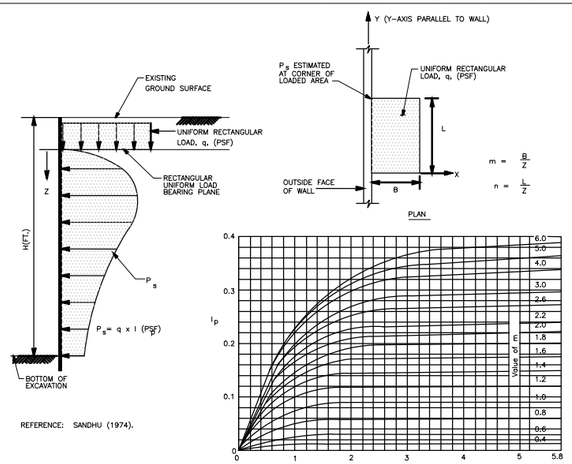

REFERENCE: SANDHU (1974).

LATERAL SURCHARGE PRESSURES DUE TO VARIOUS LOADING CONDITIONS

TRAFFIC AND CONSTRUCTION EQUIPMENT LOADING

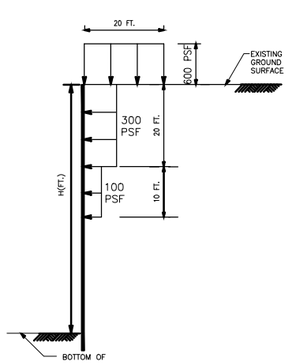

POINT LOAD

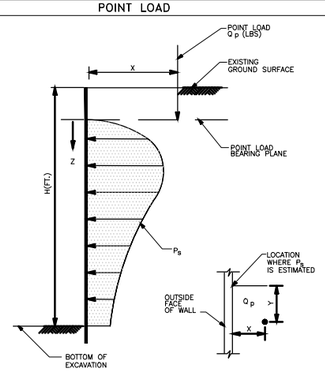

UNIFORM LINE OR STRIP LOAD

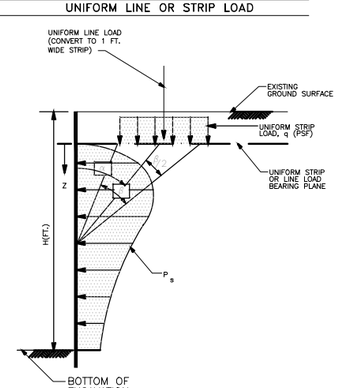

$$P_s = Q_p \frac{X^2 Z}{R^5} \quad \text{(PSF)} \qquad \text{WHERE } R = \sqrt{X^2 + Y^2 + Z^2}$$

REFERENCE: SPANGLER, ET. AL. (1982)

$$Ps = \frac{2q}{\pi}\frac{\pi\beta}{180}(\beta - \sin\beta\cos 2\alpha) \quad \text{FOR FLEXIBLE WALLS}$$

WHERE α AND β ARE IN DEGREES

REFERENCE: U.S.S. STEEL SHEET PILE DESIGN MANUAL (1975)

NOTES FOR ANALYSIS AND DESIGN OF TEMPORARY EARTH SUPPORT SYSTEMS

(NOTE: WORK THIS SHEET WITH SPECIFICATION SECTION 31 5000)

A. GENERAL

1. FLEXIBLE WALL SYSTEMS ARE CONSIDERED TO BE SOLDIER PILE AND LAGGING WALLS, STEEL SHEET PILE WALLS AND SIMILAR SYSTEMS. RIGID WALL SYSTEMS ARE CONSIDERED TO BE OPEN CONCRETE CAISSONS, SLURRY WALLS, SECANT PILE WALLS AND SIMILAR SYSTEMS.

2. THE STRUCTURAL ANALYSIS AND DESIGN AND ALLOWABLE UNIT STRESSES SHALL BE GOVERNED BY THE CURRENT EDITIONS OF THE FOLLOWING MANUALS, CODES OR SPECIFICATIONS.

   GENERAL:
   "DESIGN MANUAL (DM) 7 SERIES", ANVAL FACILITIES ENGINEERING COMMAND.
   "STANDARD SPECIFICATIONS FOR HIGHWAYS AND BRIDGES" OF THE AMERICAN ASSOCIATION OF STATE HIGHWAY AND TRANSPORTATION OFFICIALS.
   AMERICAN RAILWAY ENGINEERING AND MAINTENANCE-OF-WAY ASSOCIATION (AREMA)

   STEEL:
   "SPECIFICATIONS FOR THE DESIGN, FABRICATION AND ERECTION OF STRUCTURAL STEEL FOR BUILDINGS" OF THE AMERICAN INSTITUTE OF STEEL CONSTRUCTION.

   WELDING:
   "SPECIFICATIONS FOR WELDING HIGHWAY AND RAILWAY BRIDGES" OR "STANDARD CODE FOR WELDING IN BUILDING CONSTRUCTION" OF THE AMERICAN WELDING SOCIETY, AS APPLICABLE.

   REINFORCED CONCRETE:
   "BUILDING CODE REQUIREMENTS FOR STRUCTURAL CONCRETE" OF THE AMERICAN CONCRETE INSTITUTE.

   TIMBER:
   "NATIONAL DESIGN SPECIFICATION FOR STRESS-GRADE LUMBER AND ITS FASTENINGS" OF THE NATIONAL FOREST PRODUCTS ASSOCIATION.

3. METHODS OF ANALYSIS OF TEMPORARY EARTH SUPPORT SYSTEMS SHALL CONFORM TO GOOD ENGINEERING PRACTICE AND DESIGN OF THESE SYSTEMS SHALL BE CARRIED OUT IN ACCORDANCE WITH ABOVE REFERENCED MANUALS, CODES OR SPECIFICATIONS.

4. TEMPORARY EARTH SUPPORT SYSTEMS SHALL BE ANALYZED FOR ALL CONDITIONS THAT MIGHT OCCUR DURING THE VARIOUS STAGES OF CONSTRUCTION. AMONG OTHERS, THESE CONDITIONS INCLUDE: INSTALLATION, RELOCATION, AND REMOVAL OF BRACING; SOIL REMOVAL, AND DEWATERING OF THE EXCAVATION.

5. ELEMENTS SUPPORTING VERTICAL LOADS AS WELL AS LATERAL PRESSURES SHALL BE ANALYZED AS STRUCTURES SUBJECTED TO COMBINED AXIAL LOAD AND BENDING.

6. VERTICAL MEMBERS OF FLEXIBLE WALL SYSTEMS SHALL BE DESIGNED ASSUMING THE MEMBERS TO BE CONTINUOUS OVER ALL BRACING LEVELS, EXCEPT AT THE LOWEST BRACING LEVEL WHERE A HINGED CONNECTION SHALL BE ASSUMED.

7. ALL COMPRESSION MEMBER CONNECTIONS, IN ADDITION TO BEING DESIGNED FOR THEIR COMPRESSIVE LOADS, SHALL BE DESIGNED FOR TENSION AND SHEAR EQUAL TO A MINIMUM OF 10 PERCENT OF THEIR COMPRESSIVE LOAD, UNLESS ACTUAL TENSION AND SHEAR LOADS ARE GREATER.

8. STRESSES DUE TO TEMPERATURE VARIATIONS SHALL BE TAKEN INTO ACCOUNT IN THE DESIGN OF THE BRACING MEMBERS.

9. SOLDIER PILES MAY BE CONSIDERED FULLY BRACED IN THE PLANE OF THE WALL.

10. AT NO TIME SHALL THE VERTICAL DISTANCE FROM THE LOWEST INSTALLED BRACE TO THE BOTTOM OF THE EXCAVATION EXCEED 15 FT. VERTICAL SPACING IN CRITICAL AREAS SHALL NOT BE LESS THAN 10 FT.

11. IN CRITICAL AREAS, INITIAL EXCAVATION SHALL NOT EXCEED A MAXIMUM OF 5 FT. DEPTH WITHOUT PLACING A TOP BRACE.

12. THE MAXIMUM HEIGHT OF EXCAVATED FACE PRIOR TO INSTALLATION OF LAGGING SHOULD NOT EXCEED 5 FT. UNLAGGED EXCAVATION FACES SHOULD NOT REMAIN OPEN OVERNIGHT.

13. EXCAVATION SHALL NOT EXCEED 1 FT. BELOW EACH BRACING LEVEL PRIOR TO INSTALLATION AND PRESTRESSING OF THE BRACING.

14. THE TOE OF TEMPORARY EARTH SUPPORT SYSTEMS SHALL EXTEND A MINIMUM OF 10 FT. BELOW THE BOTTOM OF THE EXCAVATION UNLESS AN IMPENETRABLE STRATUM IS ENCOUNTERED BEFORE THIS. TOE PENETRATION REQUIREMENTS SHALL CONSIDER POTENTIAL FOR TOE KICK-IN, VERTICAL LOAD CAPACITY, BOTTOM INSTABILITY, AND HIGH SEEPAGE GRADIENTS WHICH COULD CAUSE "PIPING" OR HEAVE IN THE BOTTOM OF THE EXCAVATION FOR SECTIONS NOT DEWATERED.

15. TIMBER LAGGING, IF USED, SHALL BE STRUCTURAL GRADE HAVING A MINIMUM ALLOWABLE UNIT STRESS IN BENDING EQUAL TO 1,200 PSI (KILN-DRIED; INCLUDING ALL MODIFICATION FACTORS). TO DETERMINE THE REQUIRED LAGGING THICKNESS, COMPUTE THE MAXIMUM MOMENT IN THE WOOD LAGGING ASSUMING A UNIFORMLY LOADED, SIMPLY SUPPORTED BEAM AND REDUCE THE MOMENT BY 50%, I.E., M=0.50 x 0.125 wL . IN ADDITION, 120% OF THE ALLOWABLE UNIT STRESS IN BENDING MAY BE USED.

16. IF THE LATERAL LOADING CONDITIONS ON OPPOSITE SIDES OF THE EXCAVATION ARE NOT EQUAL, THE TEMPORARY EARTH SUPPORT SYSTEM DESIGN SHALL ACCOUNT FOR THE UNBALANCED LOADING.

B. LATERAL PRESSURES

1. LATERAL PRESSURES FOR THE "RETAINED SOIL DEWATERED" CONDITION SHALL BE USED WHEN THE TEMPORARY EARTH SUPPORT SYSTEM IS CONSTRUCTED AS A SOLDIER PILE AND LAGGING WALL. LATERAL PRESSURES FOR THE "RETAINED SOIL NOT DEWATERED" CONDITION SHALL BE USED WHEN THE TEMPORARY EARTH SUPPORT SYSTEM IS CONSTRUCTED AS A STEEL SHEET PILE WALL OR RIGID WALL SYSTEM. IF AN EXTERNAL DEWATERING SYSTEM IS INSTALLED IN CONJUNCTION WITH STEEL SHEET PILE OR RIGID WALLS WHICH PROVIDES SOIL DRAINAGE TO A LEVEL AT OR BELOW THE BOTTOM OF THE FINAL EXCAVATION LEVEL, THEN LATERAL PRESSURES FOR THE "RETAINED SOIL DEWATERED" CONDITION MAY BE UTILIZED.

2. MINIMUM DESIGN LOADING CONDITIONS SHALL BE DETERMINED BY ADDING TOGETHER THE LOADING DIAGRAMS SHOWN ON THIS DRAWING FOR SOIL (E) AND WATER (W), WHERE APPLICABLE, AND THE COMBINATION OF APPLIED SURCHARGES (S). TRAFFIC AND CONSTRUCTION EQUIPMENT LOAD SHALL BE ASSUMED ON ANY SIDE OF THE WALL THAT IS ACCESSIBLE.

3. LATERAL SURCHARGE PRESSURES FROM VERTICAL LOADS SUPPORTED BY THE SOIL ABOVE THE FINAL EXCAVATION LEVEL MUST BE CONSIDERED IN THE DESIGN, WHERE APPLICABLE (SEE SURCHARGE NOTES THIS SHEET).

C. BRACING MEMBERS

1. DESIGN OF BRACING MEMBERS SHALL SATISFY THE MOST CRITICAL CONDITIONS ANTICIPATED DURING THE CONSTRUCTION SEQUENCE.

2. BRACING MEMBERS SHALL BE STRUCTURAL STEEL.

3. TEMPORARY BRACING MEMBERS SHALL BE REMOVED AT AN APPROPRIATE STAGE OF CONSTRUCTION AND IN SUCH A MANNER AS TO AVOID IMPACT LOADING ON NEW AND EXISTING STRUCTURES AND/OR PIPELINES OR ON OTHER MEMBERS OF THE TEMPORARY EXCAVATION SUPPORT SYSTEM.

4. ALL BRACING SHALL BE PRESTRESSED TO THE FOLLOWING LIMITS:
   (A) CROSS-LOT BRACING - 60 PERCENT OF MAXIMUM DESIGN LOADS.
   (B) TIE-BACKS - 100 PERCENT OF MAXIMUM DESIGN LOADS. NO WOOD SHIMS SHALL BE USED.

5. TIE-BACKS, WHERE USED, MUST DERIVE THEIR CAPACITY FROM A BONDED LENGTH IN NATURALLY DEPOSITED SOILS LOCATED OUTSIDE A 1 HORIZONTAL TO 1 VERTICAL LINE DRAWN UPWARD FROM THE BOTTOM OF THE FINAL EXCAVATION LEVEL AT THE OUTSIDE FACE OF THE TEMPORARY EARTH SUPPORT SYSTEM.

6. SPLICES IN WALES SHALL BE DESIGNED FOR THE FULL STRUCTURAL CAPACITY OF THE MEMBER (BOTH IN SHEAR AND MOMENT) USING 100% OF AISC ALLOWABLE STRESSES FOR THE CONNECTIONS.

7. THE LOADS IN BRACING FOR FLEXIBLE WALL SYSTEMS SHALL BE COMPUTED ASSUMING THE WALL TO BE HINGED AT A SUPPORT POINT BELOW THE BOTTOM OF THE EXCAVATION AND AT EACH BRACE LEVEL EXCEPT THE TOP ONE.

D. CONSTRUCTION DESIGN GROUNDWATER LEVEL

1. LONG TERM STATIC GROUND WATER ELEVATION 1003.0
2. 100 YEAR FLOOD ELEVATION 1030.2
3. 50 YEAR FLOOD ELEVATION 1028.0
4. 10 YEAR FLOOD ELEVATION 1021.9
5. 3 MONTH FLOOD ELEVATION 1004.6
6. THE ABOVE CONSTRUCTION DESIGN GROUNDWATER LEVELS ARE FOR THE STRUCTURAL ANALYSIS AND DESIGN OF TEMPORARY EARTH SUPPORT WALLS. THEY MAY NOT BE APPROPRIATE FOR OTHER ANALYSES, SUCH AS CONSTRUCTION GROUND WATER MANAGEMENT.

E. SURCHARGES NOTES

1. SURCHARGE LOADS SHOWN ON THIS DRAWING MUST BE ADDED AS APPROPRIATE TO THE DESIGN LOADS RECOMMENDED ELSEWHERE FOR TEMPORARY EARTH SUPPORT SYSTEMS.

2. LATERAL PRESSURES DUE TO TRAFFIC AND CONSTRUCTION EQUIPMENT LOADING ARE BASED ON AN ASSUMED SURFACE SURCHARGE OF 600 PSF ACTING OVER A 20 FT. WIDE INFLUENCE AREA. FOR MORE SEVERE TRAFFIC AND CONSTRUCTION AND EQUIPMENT LOADING, ADDITIONAL ANALYSES MUST BE MADE WHICH TAKE INTO ACCOUNT THE MORE CRITICAL LOADING. LATERAL PRESSURES DUE TO TRAFFIC AND CONSTRUCTION EQUIPMENT LOADING SHALL BE INCLUDED IN THE DESIGN OF ALL TEMPORARY EARTH SUPPORT SYSTEMS.

3. FOR LATERAL PRESSURES DUE TO A UNIFORM LINE LOAD, CONVERT LINE LOAD TO 1-FT. WIDE STRIP LOAD AND DETERMINE LATERAL PRESSURES FOR UNIFORM STRIP LOAD.

4. FOR UNIFORM RECTANGULAR LOADING, LATERAL PRESSURES ARE DETERMINED AT VARIOUS DEPTHS BELOW THE CORNER OF THE RECTANGULAR LOADED AREA. WHEN THE RECTANGULAR LOADED AREA IS LOCATED AT A DISTANCE BEHIND THE WALL, THE PRINCIPAL OF LOAD SUPERPOSITION SHOULD BE USED TO DETERMINE LATERAL PRESSURES AGAINST THE WALL.

5. TEMPORARY EARTH SUPPORT WALLS MAY BE CONSIDERED NOT TO BE SUBJECTED TO LATERAL SURCHARGE PRESSURES ASSOCIATED WITH LOADS FROM ADJACENT STRUCTURES IF THE ADJACENT STRUCTURE IS LOCATED OUTSIDE A ZONE DEFINED BY A 1 HORIZONTAL TO 1 VERTICAL LINE DRAWN UPWARD AND OUTWARD TOWARD THE ADJACENT STRUCTURE FROM THE BOTTOM OF THE FINAL EXCAVATION LEVEL FROM THE OUTSIDE FACE OF THE WALL.

F. DESIGN LOADS

1. WALL SYSTEM (IN DIRECT CONTACT WITH EARTH)
   a. VERTICAL DEAD LOAD (DL): WEIGHT OF WALL AND REACTIONS FROM BRACING SYSTEM.

   b. VERTICAL LIVE LOAD (LL): ALL LIVE LOADS INCLUDING APPLICABLE CONSTRUCTION EQUIPMENT LOADING, AASHTO HS20 LOADING, AND OTHER SURCHARGES.

   c. LATERAL LOADS: EARTH (E), WATER (W), AND LATERAL SURCHARGE (S) PRESSURES, AND AXIAL LOADS FROM END WALL BRACING MEMBERS [(E)+(W)+(S)], WHERE APPLICABLE.

   d. DESIGN LOAD COMBINATIONS AND ALLOWABLE STRESSES: 100% OF [(DL)+(LL)+(W)] + 80% OF [(E)+(S)] AT 120% OF ALLOWABLE UNIT STRESS.

2. PRIMARY BRACING MEMBERS (WALES AND STRUTS):
   a. VERTICAL DEAD LOAD (DL): WEIGHT OF PRIMARY BRACING MEMBERS.

   b. VERTICAL LIVE LOAD (LL): ALL LIVE LOADS INCLUDING APPLICABLE CONSTRUCTION EQUIPMENT LOADING, AASHTO HS20 LOADING, AND OTHER SURCHARGES.

   c. LATERAL LOADS: LOADS FROM WALL SYSTEM [(E)+(W)+(S)] AND AXIAL LOADS FROM END WALLS [(E)+(W)+(S)], WHERE APPLICABLE.

   d. DESIGN LOAD COMBINATIONS AND ALLOWABLE STRESSES:
      I. WALES: 100% OF [(DL)+(LL)+(W)] +80% OF [(E)+(S)] IN BENDING + 100% IN COMPRESSION AT 120% OF ALLOWABLE UNIT STRESSES.

      II. OTHER PRIMARY BRACING: 100% OF [(DL)+(LL)+(W)] + 80% OF (E)+(S)] AT 120% OF ALLOWABLE UNIT STRESSES

3. SECONDARY BRACING MEMBERS (FOR SUPPORT OF PRIMARY INTERIOR BRACING MEMBERS):
   a. VERTICAL DEAD LOAD (DL): WEIGHT OF SECONDARY BRACING MEMBER + WEIGHT OF SUPPORTED PRIMARY BRACING MEMBERS WHERE APPLICABLE.

   b. VERTICAL LIVE LOAD (LL): AXIAL LOAD EQUAL TO 3% OF THE DESIGN AXIAL LOAD IN THE MORE HEAVILY LOADED ADJACENT PRIMARY BRACING MEMBERS.

   c. LATERAL LOADS: AXIAL LOAD EQUAL TO 3% OF THE DESIGN AXIAL LOAD IN THE MORE HEAVILY LOADED ADJACENT PRIMARY BRACING MEMBERS.

   d. DESIGN LOAD COMBINATIONS AND ALLOWABLE UNIT STRESSES: 120% OF ALLOWABLE UNIT STRESSES.

G. ALLOWABLE GROUND DEFORMATION FOR DESIGN

1. ALLOWABLE SURFACE DEFORMATIONS USED DURING DESIGN SHALL NOT EXCEED THE LIMITS SPECIFIED IN SECTIONS 31 5000 OF THE SPECIFICATIONS OR AS SHOWN ON THE PLANS. THE MOST STRINGENT LIMITS SHALL TAKE PRECEDENCE.

2. CALCULATED SURFACE DEFORMATIONS ABOVE EXISTING UTILITIES SHALL NOT EXCEED PLUS OR MINUS ½ INCH IN ANY DIRECTION NOR SHALL CALCULATED ANGULAR DISTORTION OF ANY UTILITY EXCEED 1/500 (Δ/L) AT ANY LOCATION.

REV#	DATE	DESCRIPTION	BY
1	6-26-15	ADDENDUM #3 - MODIFIED EARTH LOADS	DAW

PROFESSIONAL CIVIL ENGINEER
BRIAN E. COMBOS
E-13742
STATE OF NEBRASKA

WADE TRIM
1907 Harney Street
Omaha, NE 68102
402.345.3900
FAX 402.345.3901
www.wadetrim.com
Building relationships on a foundation of excellence

SADDLE CREEK
RETENTION TREATMENT BASIN
OPW 52049

TEMPORARY SUPPORT OF EXCAVATION
MINIMUM DESIGN CRITERIA

ISSUED FOR:	DATE:	BY:
BIDS	5/20/15	DAW

JOB NO. OMA2008-020

SHEET G-7

© Wade Trim Group, Inc.

C:\PW_WORK\DMCKONE\D0287905\GRC-PLTS-TER-01_EARTHRETENTIONCRITERIA.DWG - G-7 - PLOTTED 6/29/2015 9:11 AM BY MCKONE, DAVE

ATTACHMENT 4
Civil Sheets C-4, C-7A, & C-10

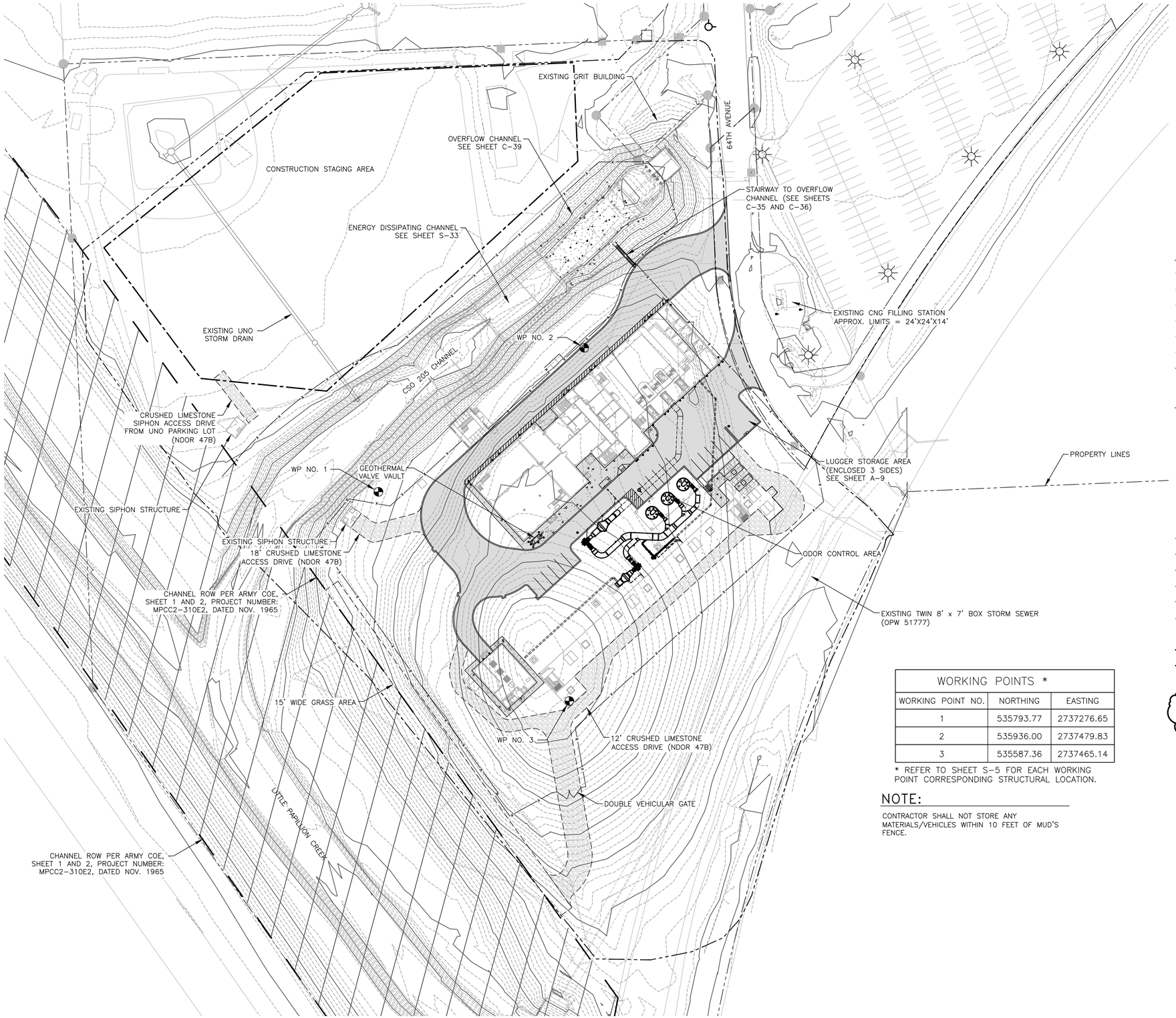

PROPOSED SITE PLAN

SCALE: 1"=50'

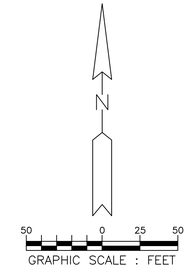

EXISTING LEGEND:

- EXISTING FENCE
- EXISTING TREE LINE
- STM — EXISTING STORM SEWER
- SAN — EXISTING SANITARY SEWER
- W — EXISTING WATER SERVICE
- GAS — EXISTING GAS SERVICE
- PROPERTY LINE

PROPOSED LEGEND

- CONSTRUCT 9" PCC PAVEMENT W/ INTEGRAL CURB TYPE "A"
- CONSTRUCT 5" PCC SIDEWALK
- CONSTRUCT 8" PCC DITCH LINER
- ST — PROPOSED STORM SEWER
- W — PROPOSED WATER SERVICE
- FS — PROPOSED FIRE SERVICE
- DW — PROPOSED DOMESTIC SERVICE
- X — PROPOSED CHAIN LINK FENCE
- PROPOSED SANITARY SEWER
- CONSTRUCTION STAGING AREA
- LIMITS OF GRADING
- LIMITS OF CONSTRUCTION

1 CONSTRUCT 6" CRUSHED LIMESTONE SURFACING USING NDOR 47B AGGREGATE ON GEOTEXTILE FABRIC. GEOTEXTILE FABRIC SHALL BE MIRAFI 140N, TREVIRA S1120, PROPEX 4545 OR APPROVED SUBSTITUTE. (GEOTEXTILE FABRIC SHALL HAVE A MINIMUM LONG TERM DESIGN STRENGTH OF 400 LBS./FT. IN BOTH THE MACHINE AND CROSS MACHINE DIRECTIONS)

WORKING POINTS *		
WORKING POINT NO.	NORTHING	EASTING
1	535793.77	2737276.65
2	535936.00	2737479.83
3	535587.36	2737465.14

* REFER TO SHEET S-5 FOR EACH WORKING POINT CORRESPONDING STRUCTURAL LOCATION.

NOTE:

CONTRACTOR SHALL NOT STORE ANY MATERIALS/VEHICLES WITHIN 10 FEET OF MUD'S FENCE.

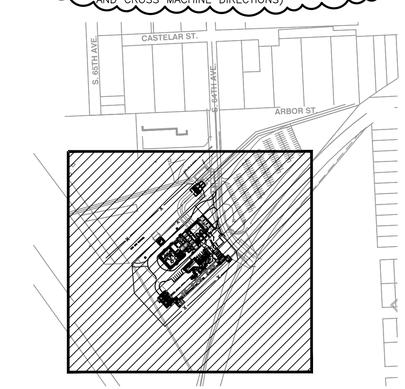

KEYMAP

REV#	DATE	DESCRIPTION	BY
1	6-26-15	ADDENDUM #3 - ADD AGGREGATE TYPE IN LEGEND	DAW

PROFESSIONAL CIVIL ENGINEER SORIN JUSTER E-7307 6-26-2015 STATE OF NEBRASKA

KIRKHAM MICHAEL

WADE TRIM
1907 Harney Street
Omaha, NE 68102
402.345.3900
FAX 402.345.3939
www.wadetrim.com
Building relationships on a foundation of excellence

SADDLE CREEK RETENTION TREATMENT BASIN OPW 52049

PROPOSED SITE PLAN

ISSUED FOR: BIDS
DATE: 5/20/15
BY: DAW

JOB NO. OMA2008-020

SHEET C-4

© Wade Trim Group, Inc.

S:\1310227\OPW-52049-SADDLE CREEK RTB\CAD\PRODUCTION_DRAWINGS\OPW-52049-PLTS_C-4_PROPSITE50.DWG - C-4 - PLOTTED 6/26/2015 9:13 AM BY JEFF KNUTSON

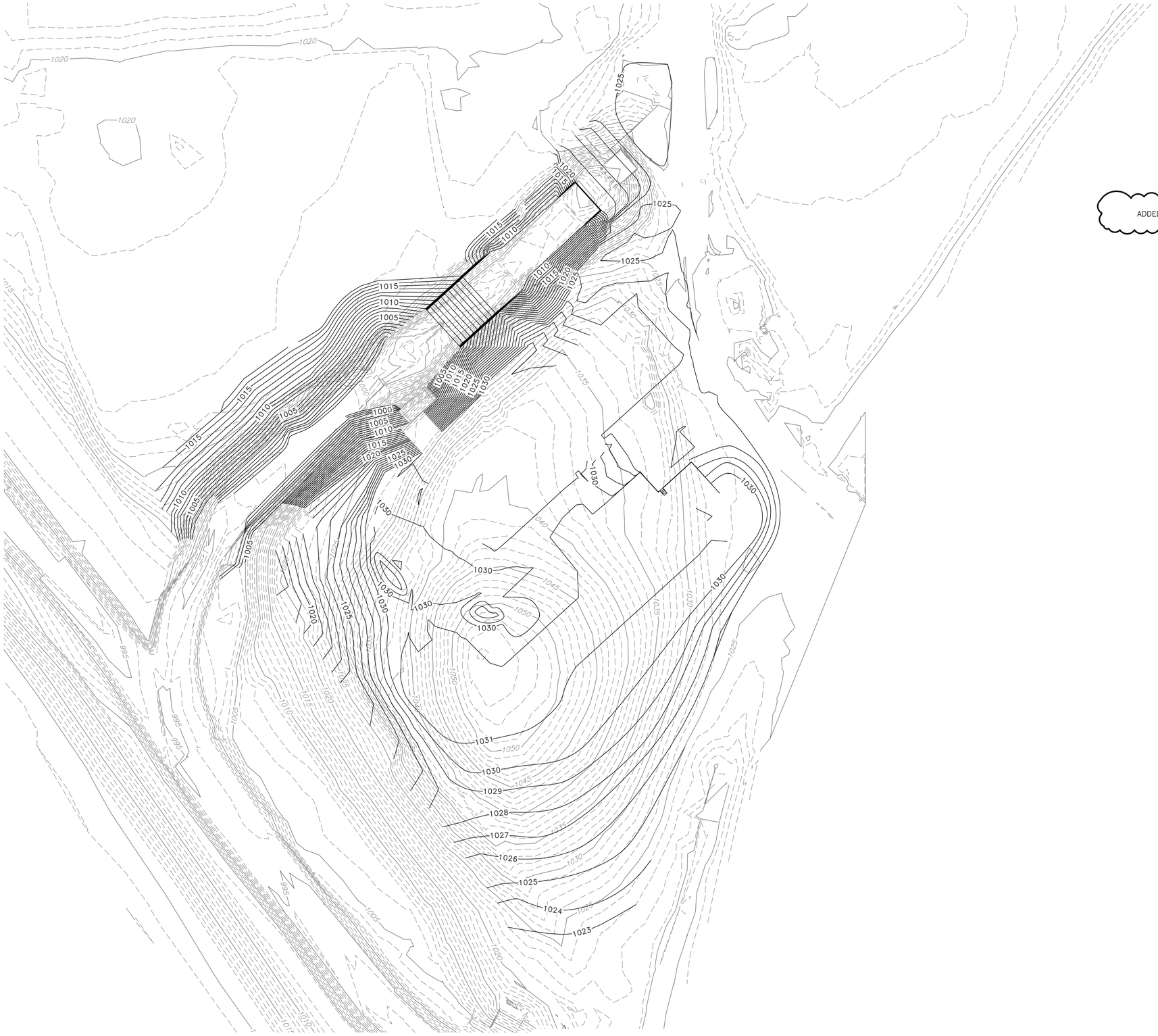

PROPOSED SITE GRADING

SCALE: 1"=50'

ADDED THIS SHEET 1

GRAPHIC SCALE : FEET (50 0 25 50)

EXISTING LEGEND:

- 1100 — EXISTING CONTOURS
- EXISTING FENCE
- EXISTING TREE LINE
- STM — EXISTING STORM SEWER
- SAN — EXISTING SANITARY SEWER
- W — EXISTING WATER SERVICE
- GAS — EXISTING GAS SERVICE
- PROPERTY LINE

PROPOSED LEGEND

- 1100 — PROPOSED CONTOURS
- ST — PROPOSED STORM SEWER
- W — PROPOSED WATER SERVICE
- FS — PROPOSED FIRE SERVICE
- DW — PROPOSED DOMESTIC SERVICE
- X — PROPOSED CHAIN LINK FENCE
- PROPOSED SANITARY SEWER
- CONSTRUCTION STAGING AREA
- LIMITS OF GRADING
- LIMITS OF CONSTRUCTION

KEYMAP

REV#	DATE	DESCRIPTION	BY
1	6-26-15	ADDENDUM #3 – ADDED THIS SHEET	DAW

PROFESSIONAL CIVIL ENGINEER
SORIN JUSTER
E-7307
6-26-2015
STATE OF NEBRASKA

WADE TRIM
1907 Harney Street
Omaha, NE 68102
402.345.3900
FAX 402.345.3901
www.wadetrim.com
Building relationships on a foundation of excellence

KIRKHAM MICHAEL

SADDLE CREEK RETENTION TREATMENT BASIN OPW 52049

PROPOSED SITE GRADING

ISSUED FOR: BIDS
DATE: 5/20/15
BY: DAW

JOB NO. OMA2008-020

SHEET C-7A

© Wade Trim Group, Inc.

S:\1310227\OPW-52049-SADDLE CREEK RTB\CAD\PRODUCTION_DRAWINGS\OPW-52049-PLTS_C-7A_PROPSITEGRADING50.DWG - C-7A - PLOTTED 6/26/2015 9:15 AM BY JEFF KNUTSON

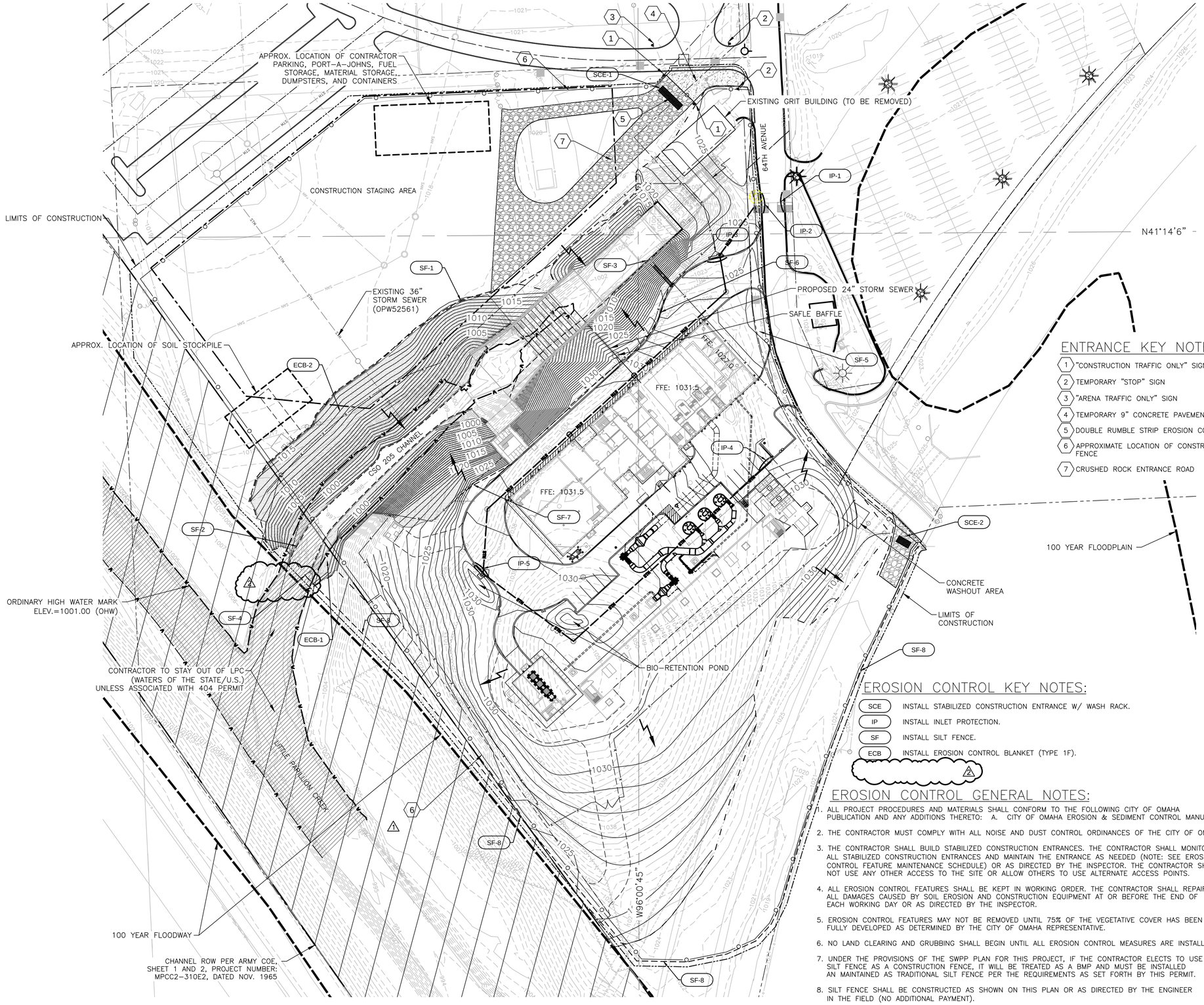

STORM WATER POLLUTION PREVENTION PLAN

SCALE: 1"=50'

N

50 0 25 50

GRAPHIC SCALE : FEET

EXISTING LEGEND:

- 1100 — EXISTING CONTOURS
- EXISTING FENCE
- EXISTING TREE LINE
- STM — EXISTING STORM SEWER
- SAN — EXISTING SANITARY SEWER
- W — EXISTING WATER SERVICE
- GAS — EXISTING GAS SERVICE
- PROPERTY LINE

PROPOSED LEGEND

- FF: 1000 — FINISH FLOOR ELEVATION
- STM — PROPOSED STORM SEWER
- W — PROPOSED WATER SERVICE
- FS — PROPOSED FIRE SERVICE
- DW — PROPOSED DOMESTIC SERVICE
- X — PROPOSED CHAIN LINK FENCE
- PROPOSED SANITARY SEWER
- LIMITS OF GRADING
- LIMITS OF CONSTRUCTION
- FABRIC SILT FENCE
- 1100 — PROPOSED CONTOURS
- CURB INLET PROTECTION
- SEEDING WITH EROSION CONTROL BLANKET (TYPE 1F)
- TEMPORARY 9" PCC PAVEMENT
- FLOW DIRECTION
- CONSTRUCTION STAGING AREA
- CRUSHED ROCK ENTRANCE ROAD
- OHW ELEVATION 1001.0

ENTRANCE KEY NOTES

1. "CONSTRUCTION TRAFFIC ONLY" SIGN
2. TEMPORARY "STOP" SIGN
3. "ARENA TRAFFIC ONLY" SIGN
4. TEMPORARY 9" CONCRETE PAVEMENT
5. DOUBLE RUMBLE STRIP EROSION CONTROL ENTRANCE
6. APPROXIMATE LOCATION OF CONSTRUCTION SECURITY FENCE
7. CRUSHED ROCK ENTRANCE ROAD

EROSION CONTROL KEY NOTES:

- SCE — INSTALL STABILIZED CONSTRUCTION ENTRANCE W/ WASH RACK.
- IP — INSTALL INLET PROTECTION.
- SF — INSTALL SILT FENCE.
- ECB — INSTALL EROSION CONTROL BLANKET (TYPE 1F).
- 2

EROSION CONTROL GENERAL NOTES:

1. ALL PROJECT PROCEDURES AND MATERIALS SHALL CONFORM TO THE FOLLOWING CITY OF OMAHA PUBLICATION AND ANY ADDITIONS THERETO: A. CITY OF OMAHA EROSION & SEDIMENT CONTROL MANUAL.
2. THE CONTRACTOR MUST COMPLY WITH ALL NOISE AND DUST CONTROL ORDINANCES OF THE CITY OF OMAHA.
3. THE CONTRACTOR SHALL BUILD STABILIZED CONSTRUCTION ENTRANCES. THE CONTRACTOR SHALL MONITOR ALL STABILIZED CONSTRUCTION ENTRANCES AND MAINTAIN THE ENTRANCE AS NEEDED (NOTE: SEE EROSION CONTROL FEATURE MAINTENANCE SCHEDULE) OR AS DIRECTED BY THE INSPECTOR. THE CONTRACTOR SHALL NOT USE ANY OTHER ACCESS TO THE SITE OR ALLOW OTHERS TO USE ALTERNATE ACCESS POINTS.
4. ALL EROSION CONTROL FEATURES SHALL BE KEPT IN WORKING ORDER. THE CONTRACTOR SHALL REPAIR ALL DAMAGES CAUSED BY SOIL EROSION AND CONSTRUCTION EQUIPMENT AT OR BEFORE THE END OF EACH WORKING DAY OR AS DIRECTED BY THE INSPECTOR.
5. EROSION CONTROL FEATURES MAY NOT BE REMOVED UNTIL 75% OF THE VEGETATIVE COVER HAS BEEN FULLY DEVELOPED AS DETERMINED BY THE CITY OF OMAHA REPRESENTATIVE.
6. NO LAND CLEARING AND GRUBBING SHALL BEGIN UNTIL ALL EROSION CONTROL MEASURES ARE INSTALLED.
7. UNDER THE PROVISIONS OF THE SWPP PLAN FOR THIS PROJECT, IF THE CONTRACTOR ELECTS TO USE SILT FENCE AS A CONSTRUCTION FENCE, IT WILL BE TREATED AS A BMP AND MUST BE INSTALLED AN MAINTAINED AS TRADITIONAL SILT FENCE PER THE REQUIREMENTS AS SET FORTH BY THIS PERMIT.
8. SILT FENCE SHALL BE CONSTRUCTED AS SHOWN ON THIS PLAN OR AS DIRECTED BY THE ENGINEER IN THE FIELD (NO ADDITIONAL PAYMENT).
9. ALL DISTURBED AREAS SHALL BE SEEDED.

KEYMAP

REV#	DATE	DESCRIPTION	BY
3	6-26-15	ADDENDUM #3 – REMOVE COFFERDAM AND NOTE	DAW
2	6-18-15	ADDENDUM #2 – REV. CONST. SECURITY FENCE	DAW

PROFESSIONAL CIVIL ENGINEER SORIN JUSTER E-7307 6-26-2015 STATE OF NEBRASKA

WADETRIM
1907 Harney Street
Omaha, NE 68102
402.341.3860
FAX 402.342.3901
www.wadetrim.com
Building relationships on a foundation of excellence

KIRKHAM MICHAEL

SADDLE CREEK RETENTION TREATMENT BASIN OPW 52049

STORM WATER POLLUTION PREVENTION PLAN

ISSUED FOR: BIDS — DATE: 5/20/15 — BY: DAW

JOB NO. OMA2008-020

SHEET C-10

© Wade Trim Group, Inc.

S:\1310227\OPW-52049-SADDLE CREEK RTB\CAD\PRODUCTION_DRAWINGS\OPW-52049-PLTS_C-16_PROPSITEEROSION50.DWG – C-10 – PLOTTED 6/26/2015 9:14 AM BY: JEFF KNUTSON

ATTACHMENT 5
Demolition Sheets D-2 & D-3

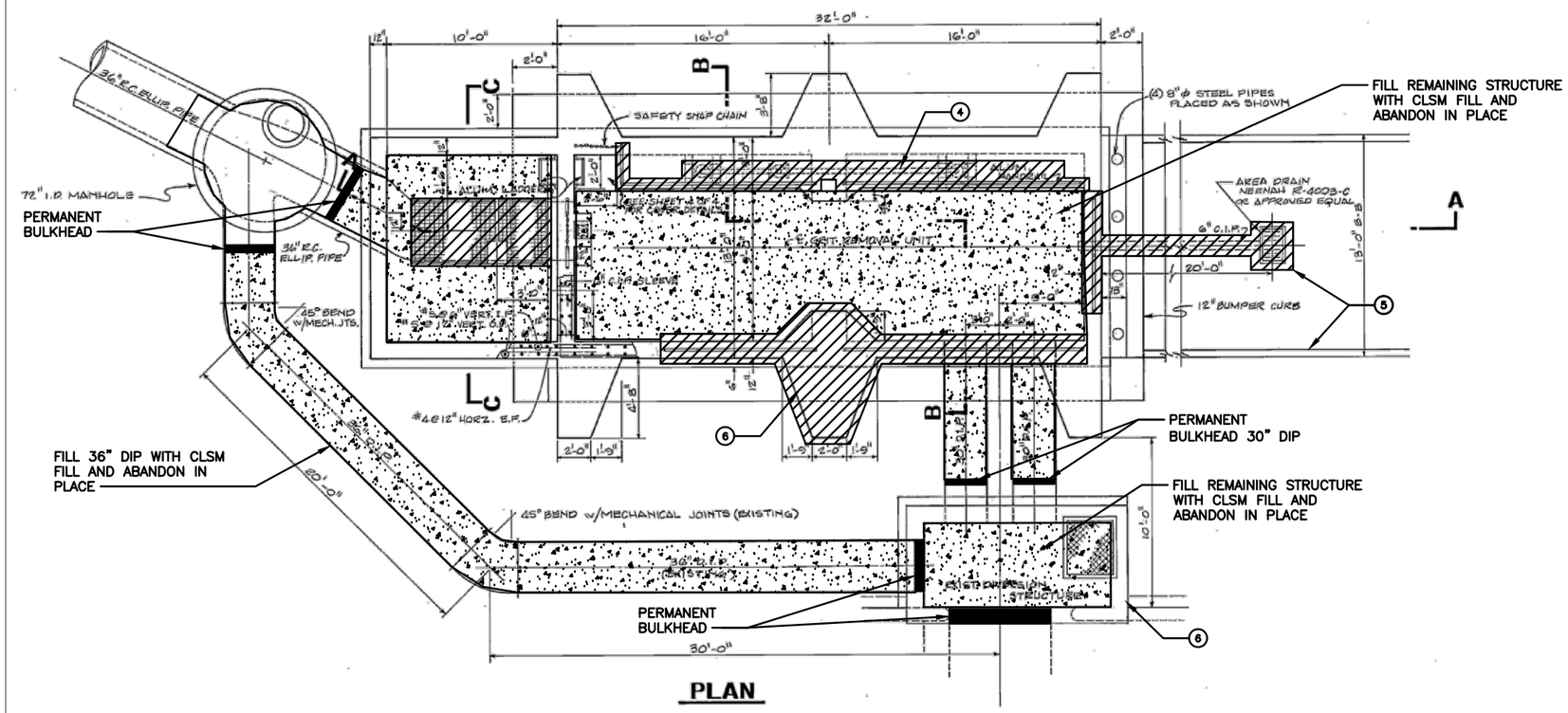

PLAN

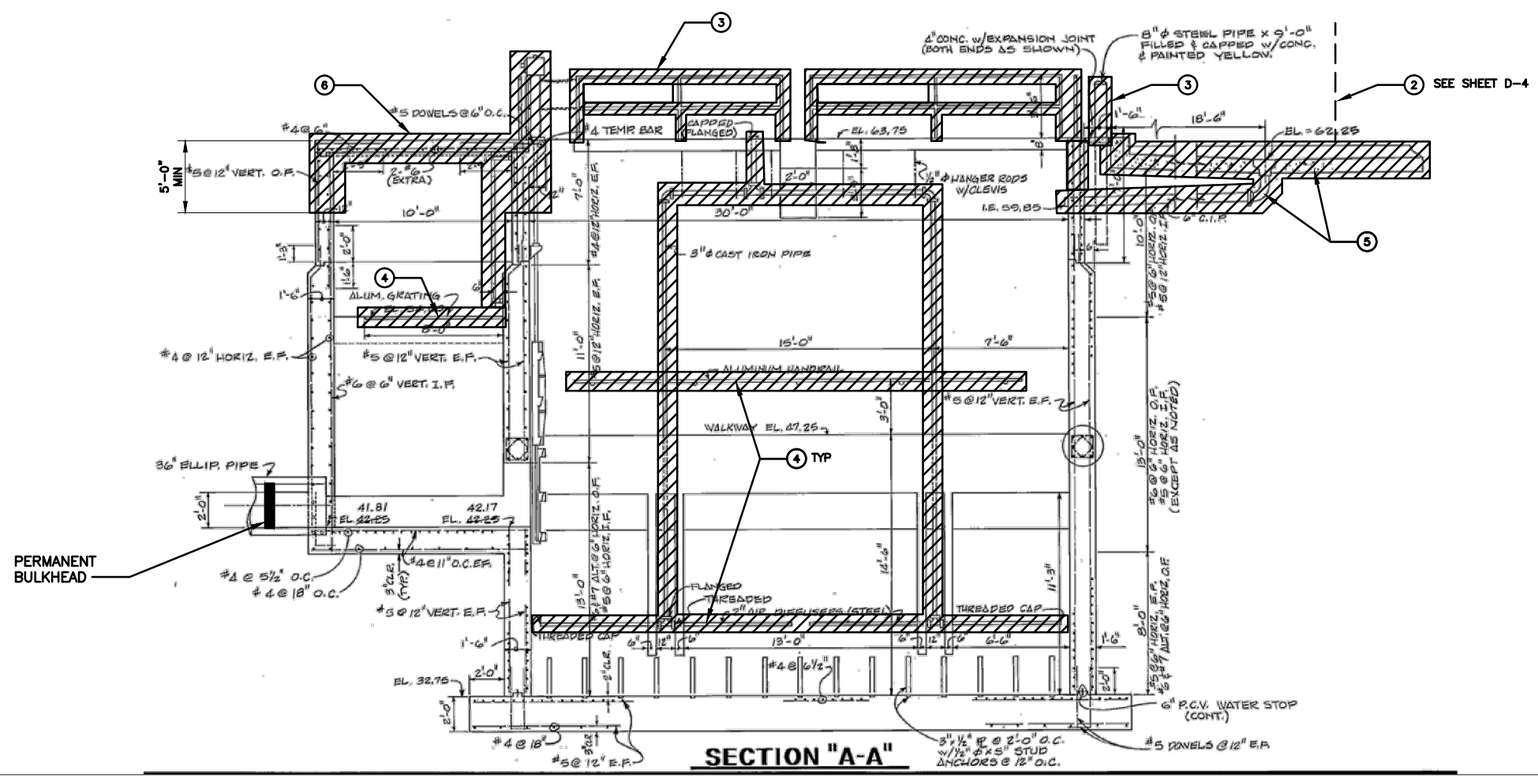

SECTION "A-A"

NOTES:

1. CONTRACTOR IS CAUTIONED THAT HAZARDOUS MATERIALS ARE KNOWN TO BE PRESENT. DEMOLITION ACTIVITIES SHALL ACCOMMODATE REMEDIATION, DISPOSAL AND WORKER SAFETY. REFER TO HAZARDOUS MATERIALS SURVEY IN CONTRACT APPENDICES.
2. CONTRACTOR SHALL BE RESPONSIBLE FOR DISPOSAL OF ALL DEMOLITION DEBRIS.
3. WORK SHOWN ON THIS SHEET CANNOT COMMENCE UNTIL THE NEW RTB FACILITY IS OPERATIONAL.

DEMOLITION KEYNOTES:

1. ONCE NEW RTB FACILITY IS OPERATIONAL AND UPON APPROVAL OF CITY AND ENGINEER REMOVE EXISTING SUPERSTRUCTURE'S ELECTRICAL, MECHANICAL, PROCESS PIPING AND PLUMBING SYSTEMS COMPLETE.
2. REMOVE EXISTING BUILDING SUPERSTRUCTURE INCLUDING BUT NOT LIMITED TO ROOFING, METAL ROOF DECK, STEEL TRUSSES, STRUCTURAL STEEL, BRIDGE CRANE AND HOIST, MASONRY AND CONCRETE WALLS, DOORS, WINDOWS AND VENTS.
3. REMOVE MISCELLANEOUS APPURTENANCES LOCATED ABOVE GRADE (HANDRAILS, GUARDRAILS, BOLLARDS, ETC).
4. REMOVE EXISTING GATES, ACTUATORS, OPERATORS, PROCESS PIPING, DIFFUSERS, HANGERS, PLATFORMS, LADDERS AND HANDRAILS WITHIN GRIT PIT.
5. REMOVE SLAB ON GRADE AND MISCELLANEOUS BURIED PIPING.
6. REMOVE ENTIRE EXISTING REINFORCED CONCRETE STRUCTURE TO 5 FEET BELOW FINISHED GRADE AND FILL REMAINING STRUCTURE WITH CLSM FILL.

LEGEND

- REMOVE ALL ELEMENTS WITHIN THIS AREA
- CLSM FILL
- PERMANENT REINFORCED CONCRETE BLUKHEAD

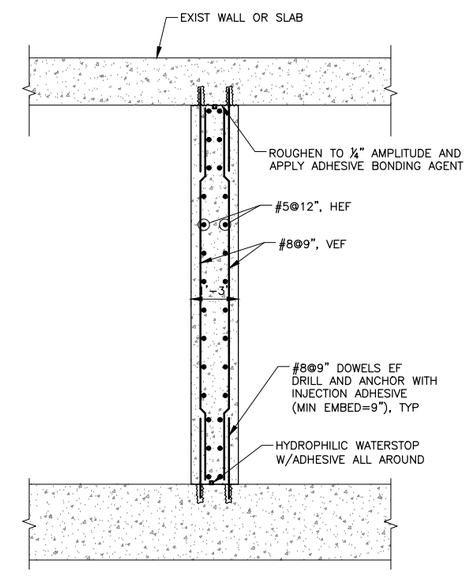

PERMANENT BULKHEAD DETAIL

SCALE: 1/2"=1'-0"

NOTE:

PORTIONS OF REFERENCED DRAWINGS, PROVIDED BY THE OWNER, HAVE BEEN REPRODUCED FROM PREVIOUS CONSTRUCTION DOCUMENTS. THIS DRAWING IS USED TO ILLUSTRATE MODIFICATIONS REQUIRED UNDER THIS CONTRACT, HOWEVER MAY NOT ACCURATELY REFLECT AS-BUILT OR CURRENT CONDITIONS. CONTRACTOR SHALL FIELD VERIFY INFORMATION AS NECESSARY TO COMPLETE THE WORK.

REV#	DATE	DESCRIPTION	BY
1	6-26-15	ADDENDUM #3 – ADDED NOTE	DAW

BRIAN E. GOMBOS E-13742 PROFESSIONAL CIVIL ENGINEER STATE OF NEBRASKA

WADE TRIM
1907 Harney Street
Omaha, NE 68102
402.345.3900
FAX 402.345.3901
www.wadetrim.com
Building relationships on a foundation of excellence

SADDLE CREEK RETENTION TREATMENT BASIN
OPW 52049
EXISTING GRIT FACILITY DEMOLITION DETAILS

ISSUED FOR:	DATE:	BY:
BIDS	5/20/15	DAW

JOB NO. OMA2008-020

SHEET D-2

© Wade Trim Group, Inc.

C:\PW_WORK\DMCKONE\D0287905\DDT-PLTS-D-2_GRITFACILITYDEMO.DWG - D-2 - PLOTTED 6/29/2015 9:11 AM BY MCKONE, DAVE

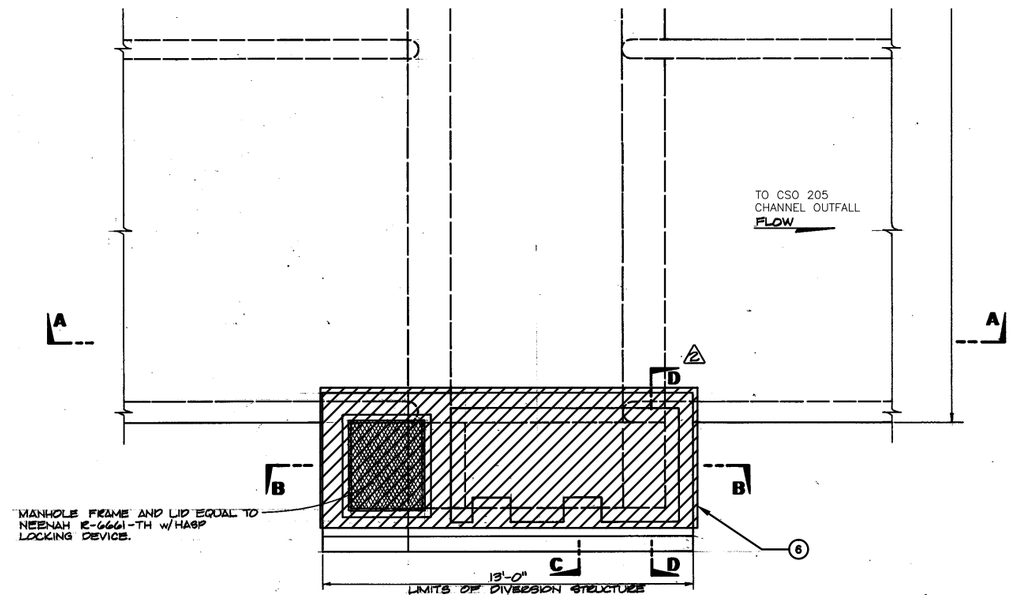

PLAN VIEW

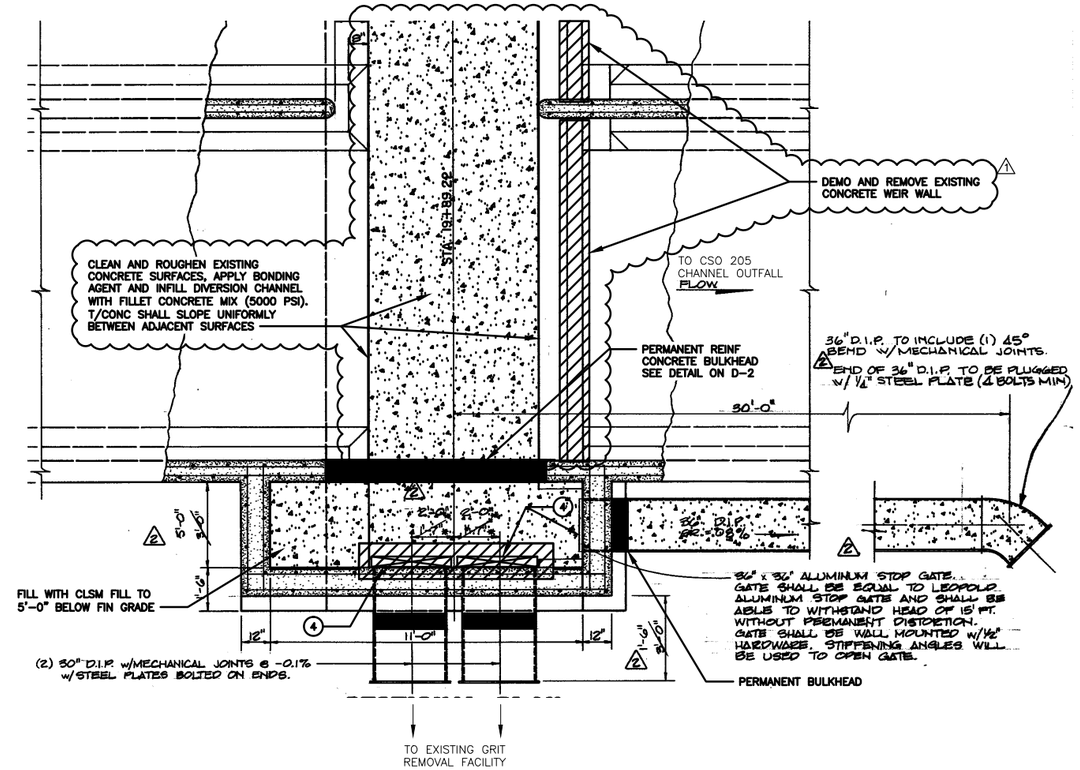

PLAN VIEW

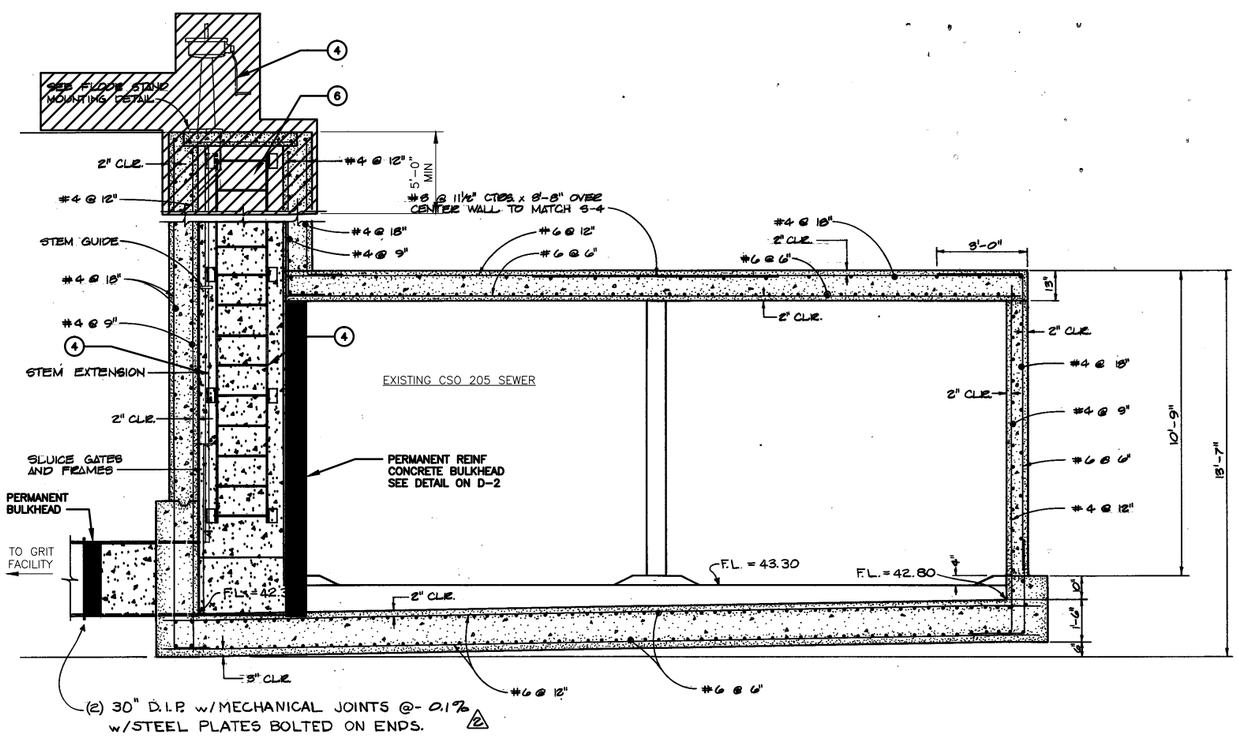

SECTION C–C

LOOKING NORTHEAST

NOTES:

1. CONTRACTOR IS CAUTIONED THAT HAZARDOUS MATERIALS ARE ANTICIPATED TO BE PRESENT. DEMOLITION ACTIVITIES SHALL ACCOMMODATE REMEDIATION, DISPOSAL AND WORKER SAFETY.
2. WORK SHOWN ON THIS SHEET CANNOT COMMENCE UNTIL THE NEW RTB FACILITY IS OPERATIONAL. (1)

DEMOLITION KEYNOTES:

1. ONCE NEW RTB FACILITY IS OPERATIONAL AND UPON APPROVAL OF CITY AND ENGINEER REMOVE EXISTING SUPERSTRUCTURE'S ELECTRICAL, MECHANICAL, PROCESS PIPING AND PLUMBING SYSTEMS COMPLETE.
2. REMOVE EXISTING BUILDING SUPERSTRUCTURE INCLUDING BUT NOT LIMITED TO ROOFING, METAL ROOF DECK, STEEL TRUSSES, STRUCTURAL STEEL, BRIDGE CRANE AND HOIST, MASONRY AND CONCRETE WALLS, DOORS, WINDOWS AND VENTS.
3. REMOVE MISCELLANEOUS APPURTENANCES LOCATED ABOVE GRADE (HANDRAILS, GUARDRAILS, BOLLARDS, ETC).
4. REMOVE EXISTING GATES, ACTUATORS, OPERATORS, PROCESS PIPING, DIFFUSERS, HANGERS, PLATFORMS, LADDERS AND HANDRAILS WITHIN GRIT PIT.
5. REMOVE SLAB ON GRADE AND MISCELLANEOUS BURIED PIPING.
6. REMOVE EXISTING REINFORCED CONCRETE STRUCTURE TO 5 FEET BELOW FINISHED GRADE AND FILL REMAINING STRUCTURE WITH CLSM FILL IN 5 FT LIFTS.

LEGEND

REMOVE ALL ELEMENTS WITHIN THIS AREA

CLSM FILL

PERMANENT REINFORCED CONCRETE BLUKHEAD

NOTE:

PORTIONS OF REFERENCED DRAWINGS, PROVIDED BY THE OWNER, HAVE BEEN REPRODUCED FROM PREVIOUS CONSTRUCTION DOCUMENTS. THIS DRAWING IS USED TO ILLUSTRATE MODIFICATIONS REQUIRED UNDER THIS CONTRACT, HOWEVER MAY NOT ACCURATELY REFLECT AS-BUILT OR CURRENT CONDITIONS. CONTRACTOR SHALL FIELD VERIFY INFORMATION AS NECESSARY TO COMPLETE THE WORK.

REV#	DATE	DESCRIPTION	BY
1	6-26-15	ADDENDUM #3 – ADDITIONAL DEMOLITION	DAW

PROFESSIONAL CIVIL ENGINEER
BRIAN E. GOMBOS
E-13742
STATE OF NEBRASKA

WADE TRIM
1907 Harney Street
Omaha, NE 68102
402-345-3900
FAX 402-345-3901
www.wadetrim.com
Building relationships on a foundation of excellence

SADDLE CREEK
RETENTION TREATMENT BASIN
OPW 52049
EXISTING GRIT FACILITY
DEMOLITION DETAILS

ISSUED FOR: DATE: BY:
BIDS 5/20/15 DAW

JOB NO. OMA2008-020

SHEET D–3

© Wade Trim Group, Inc.

C:\PW_WORK\DMCKONE\D0287905\D01-PLTS-D-3_GRITFACILITYDEMO.DWG – D-3 – PLOTTED 6/29/2015 9:11 AM BY MCKONE, DAVE

ATTACHMENT 6
Structural Sheets S-17 – S-20

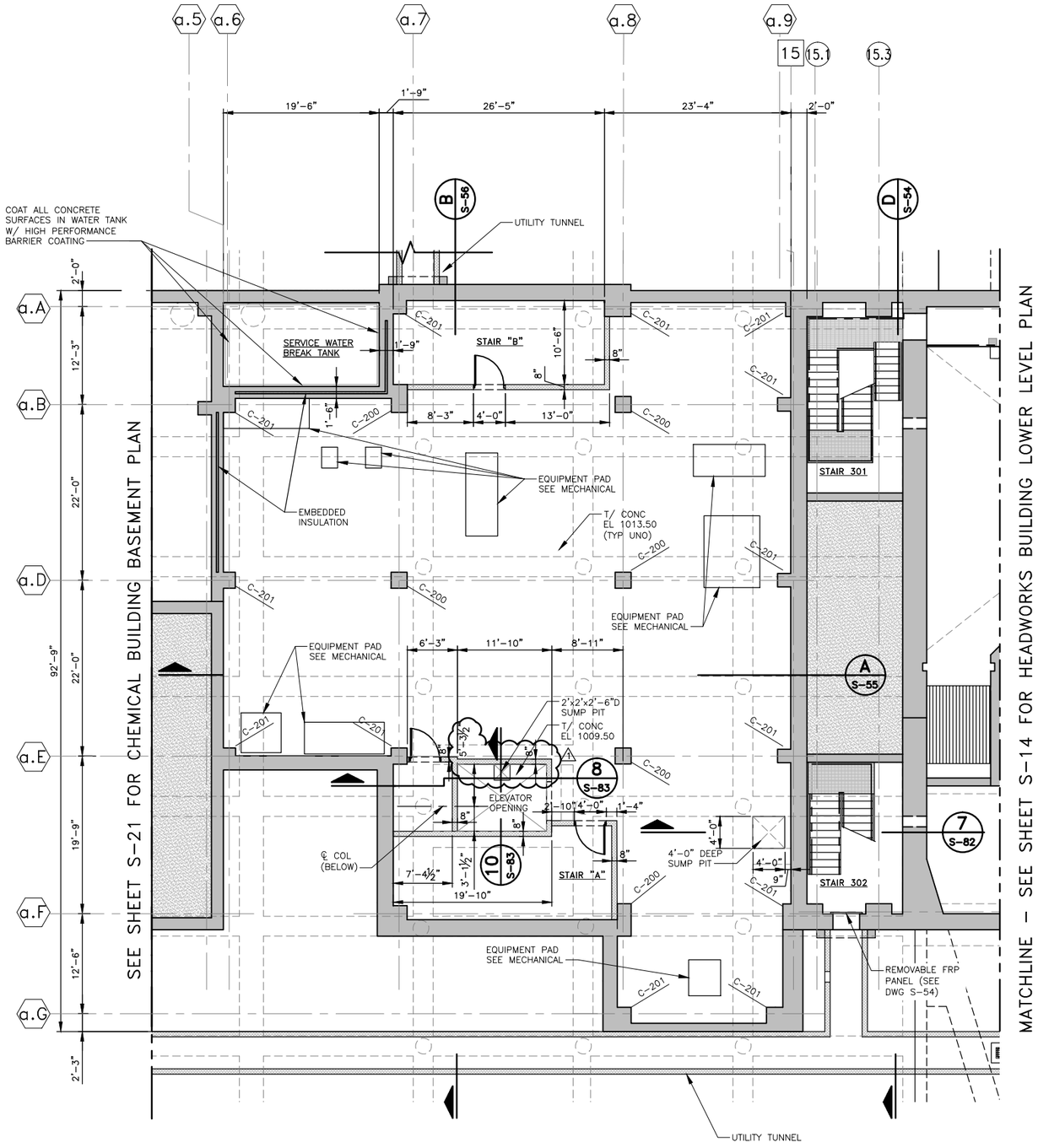

OPERATIONS BUILDING BASEMENT PLAN

SCALE: 1/8"=1'-0" EL 1013.50

NOTES:

DESIGN FLOOR LOADS (OPERATIONS BUILDING BASEMENT)

A. LIVE LOAD: 300PSF
B. FLUID LOAD: 1125PSF (GRAVITY)
C. FLUID LOAD: 1250PSF (UPLIFT)

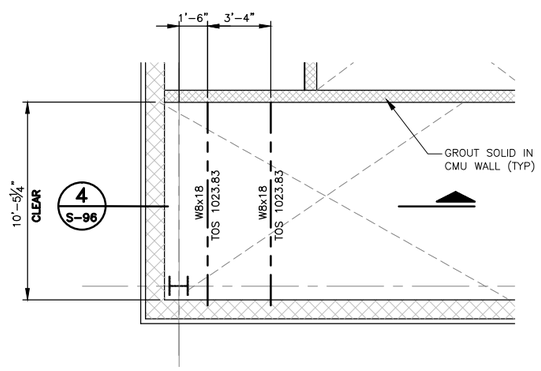

ENLARGED PLAN STAIR "A" FRAMING

SCALE: 1/8"=1'-0" (TYPICAL 2 LOCATIONS) STAIR "B" OPPOSITE HAND

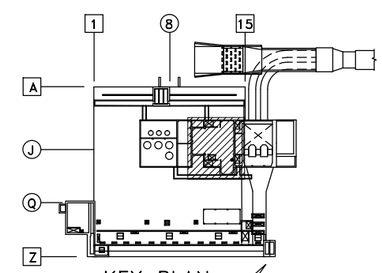

KEY PLAN

SCALE: NONE

REV#	DATE	DESCRIPTION	BY
1	6-26-15	ADDENDUM #3 - MODIFIED ELEVATOR SHAFT	DAW

PROFESSIONAL CIVIL ENGINEER BRIAN E. GOMBOS E-13712 STATE OF NEBRASKA

WADE TRIM
1907 Harney Street
Omaha, NE 68102
402.345.3900
FAX: 402.345.3901
www.wadetrim.com
Building relationships on a foundation of excellence

SADDLE CREEK RETENTION TREATMENT BASIN
OPW 52049
OPERATIONS BUILDING BASEMENT PLAN

ISSUED FOR: DATE: BY:
BIDS 5/20/15 DAW

JOB NO. OMA2008-020

SHEET S-17

© Wade Trim Group, Inc.

C:\PW_WORK\DMCKONE\D0287905\SFP-PLTS-S-17-OPERATIONSBLDGLOWERPLAN.DWG - S-17 - PLOTTED 6/29/2015 9:11 AM BY MCKONE, DAVE

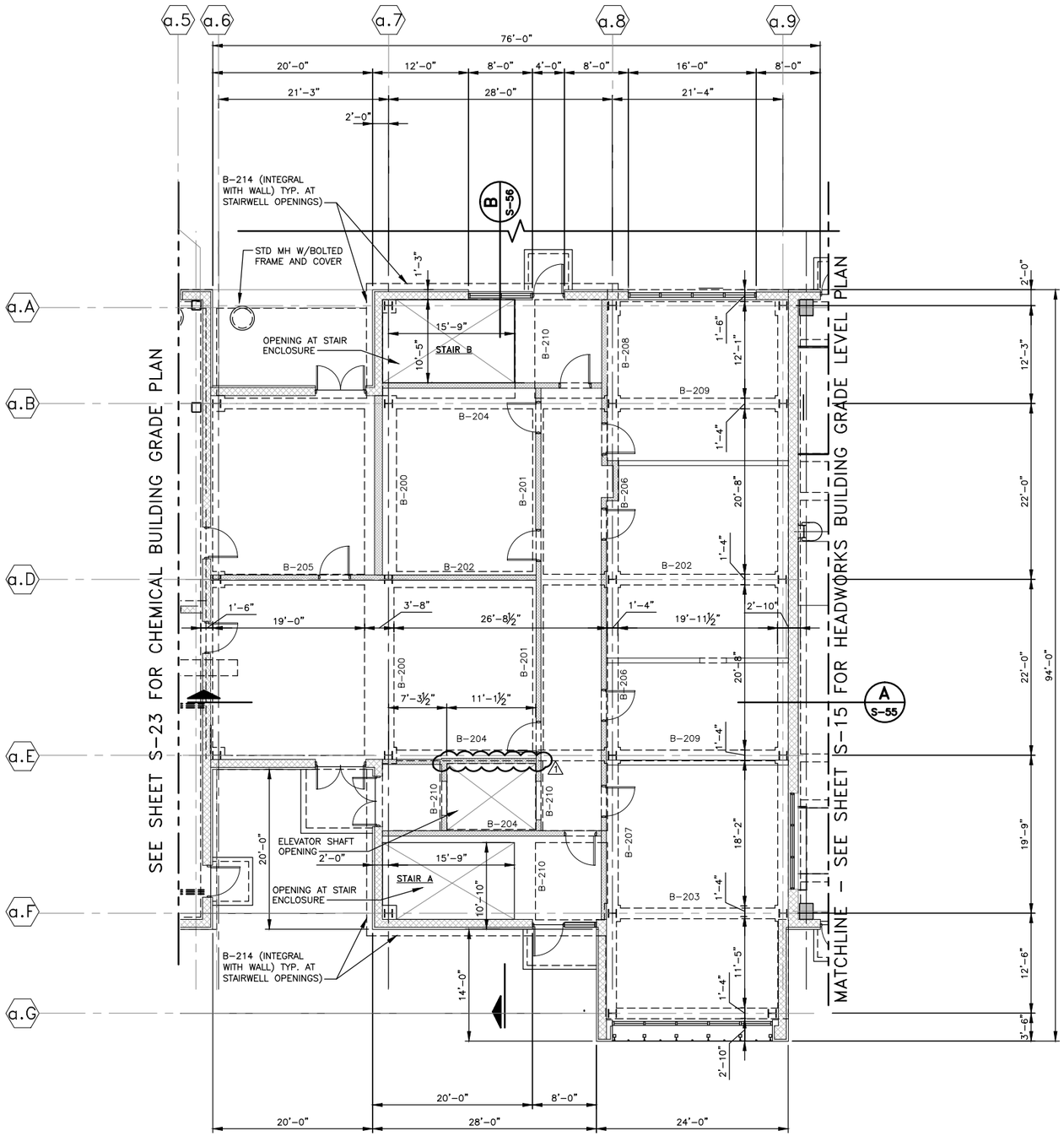

OPERATIONS BUILDING GRADE LEVEL PLAN

SCALE: 1/8"=1'-0" EL 1031.50

NOTES:

1. (C-x) INDICATES COLUMN MARK – SEE COLUMN CALL-OUT THIS SHEET FOR COLUMN SIZE, SEE COLUMN SCHEDULE ON SHEET S-93 FOR DETAILS.
2. DESIGN LIVE LOAD = 300 PSF
3. SLAB REINFORCING:
   #8 @ 12" EW BOTTOM
   #8 @ 10" EW TOP

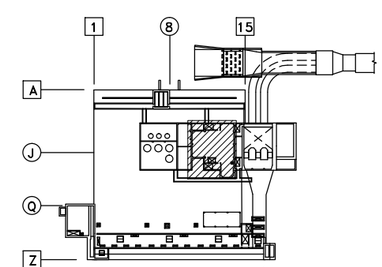

KEY PLAN

SCALE: NONE

REV#	DATE	DESCRIPTION	BY
1	6-26-15	ADDENDUM #3 – MODIFIED ELEVATOR SHAFT	DAW

PROFESSIONAL CIVIL ENGINEER BRIAN E. GOMBOS E-13712 STATE OF NEBRASKA

WADE TRIM
1907 Harney Street
Omaha, NE 68102
402.345.3905
FAX 402.345.3901
www.wadetrim.com
Building relationships on a foundation of excellence

SADDLE CREEK RETENTION TREATMENT BASIN
OPW 52049
OPERATIONS BUILDING GRADE LEVEL PLAN

ISSUED FOR: DATE: BY:
BIDS 5/20/15 DAW

JOB NO. OMA2008-020

SHEET S-18

© Wade Trim Group, Inc.

C:\PW_WORK\DMCKONE\D0287905\SFP-PLTS-S-18-OPERATIONSBLDGGRADEPLAN.DWG – S-18 – PLOTTED 6/29/2015 9:11 AM BY MCKONE, DAVE

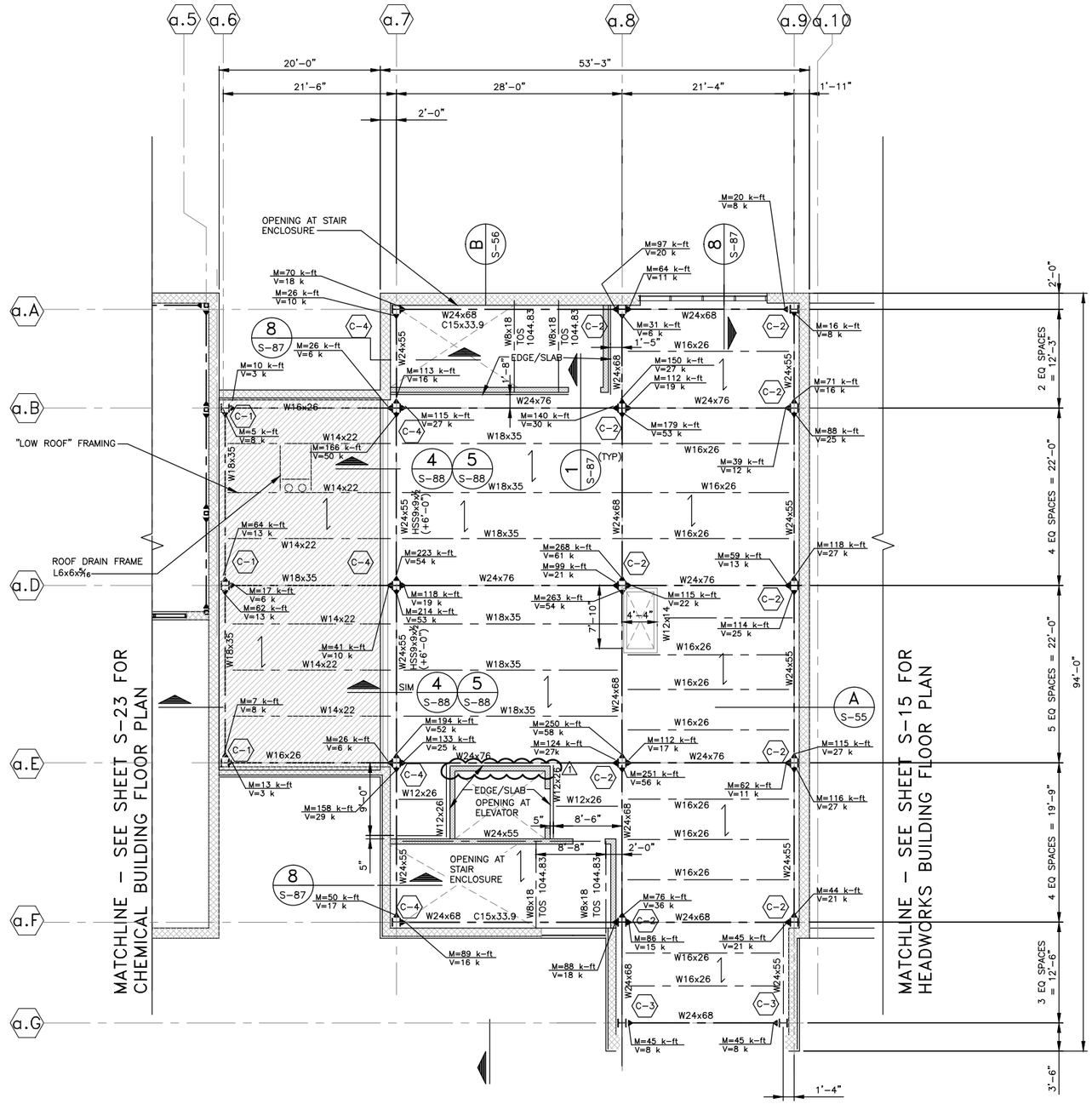

OPERATIONS BUILDING SECOND FLOOR AND LOW ROOF FRAMING PLAN

SCALE: 1/8"=1'-0" EL 1045.50

NOTES:

1. SECOND FLOOR DECK AND SLAB (2 STORY AREA): STEEL FLOOR DECK SHALL BE 2"x20 GA VLI COMPOSITE DECK (GALVANIZED), WITH 2½" OF NORMAL WEIGHT CONCRETE (f'c=3000psi) OVER DECK FLUTES (TOTAL SLAB THICKNESS 4½"). REINFORCED WITH WWF 6x6-W4.0xW4.0. SPAN IS DENOTED BY ⟷.
2. REPRESENTS THE BEAM/GIRDER TO COLUMN CONNECTION, SHALL BE A MOMENT CONNECTION. THE INDICATED MOMENT AND SHEAR FORCES ( ) ARE A MAXIMUM SERVICE LOADS AND MAY NOT BE REDUCED FOR WIND. (MOMENTS ARE GIVEN IN KIP-FEET (K-FT) AND SHEARS ARE GIVEN IN KIPS (K).
3. TOP OF STEEL ELEVATION FOR THE 2-STORY AREA IS ELEVATION 1045.13 UNLESS NOTED OTHERWISE.
4. (C-x) INDICATES COLUMN MARK - SEE COLUMN CALL-OUT THIS SHEET FOR COLUMN SIZE, SEE COLUMN SCHEDULE ON SHEET S-93 FOR DETAILS.
5. ELEVATED CONCRETE SLABS SHALL HAVE CONTROL JOINTS OVER ALL INTERIOR GIRDERS.
6. DECK SHALL BE CONTINUOUS OVER THREE OR MORE SUPPORTS.
7. PROVIDE ADDITIONAL REINFORCEMENT AND CLOSURE PIECES AS REQUIRED FOR STRENGTH AND CONTINUITY OF DECKING AND SUPPORT OF OTHER WORK, AND AS NOTED ON PLANS.

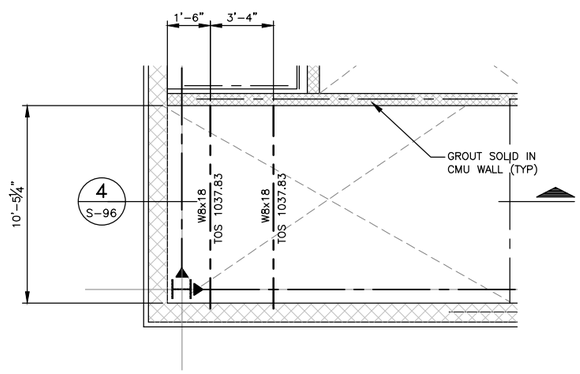

ENLARGED PLAN STAIR "A" FRAMING

SCALE: 1/8"=1'-0" (TYPICAL 2 LOCATIONS) STAIR "B" OPPOSITE HAND

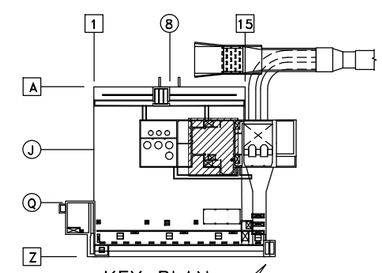

KEY PLAN

SCALE: NONE

REV#	DATE	DESCRIPTION	BY
1	6-26-15	ADDENDUM #3 - MODIFIED ELEVATOR SHAFT	DAW

PROFESSIONAL CIVIL ENGINEER BRIAN E. GOMBOS E-13742 STATE OF NEBRASKA

WADE TRIM
1907 Harney Street
Omaha, NE 68102
402.345.3900
Fax 402.345.3901
www.wadetrim.com
Building relationships on a foundation of excellence

SADDLE CREEK RETENTION TREATMENT BASIN
OPW 52049
OPERATIONS BUILDING
SECOND FLOOR FRAMING PLAN

ISSUED FOR: DATE: BY:
BIDS 5/20/15 DAW

JOB NO. OMA2008-020

SHEET S-19

© Wade Trim Group, Inc.

C:\PW_WORK\DMCKONE\D0287905\SFP-PLTS-S-19-OPERATIONSBLDGSECONDFLOORPLAN.DWG - S-19 - PLOTTED 6/29/2015 9:11 AM BY MCKONE, DAVE

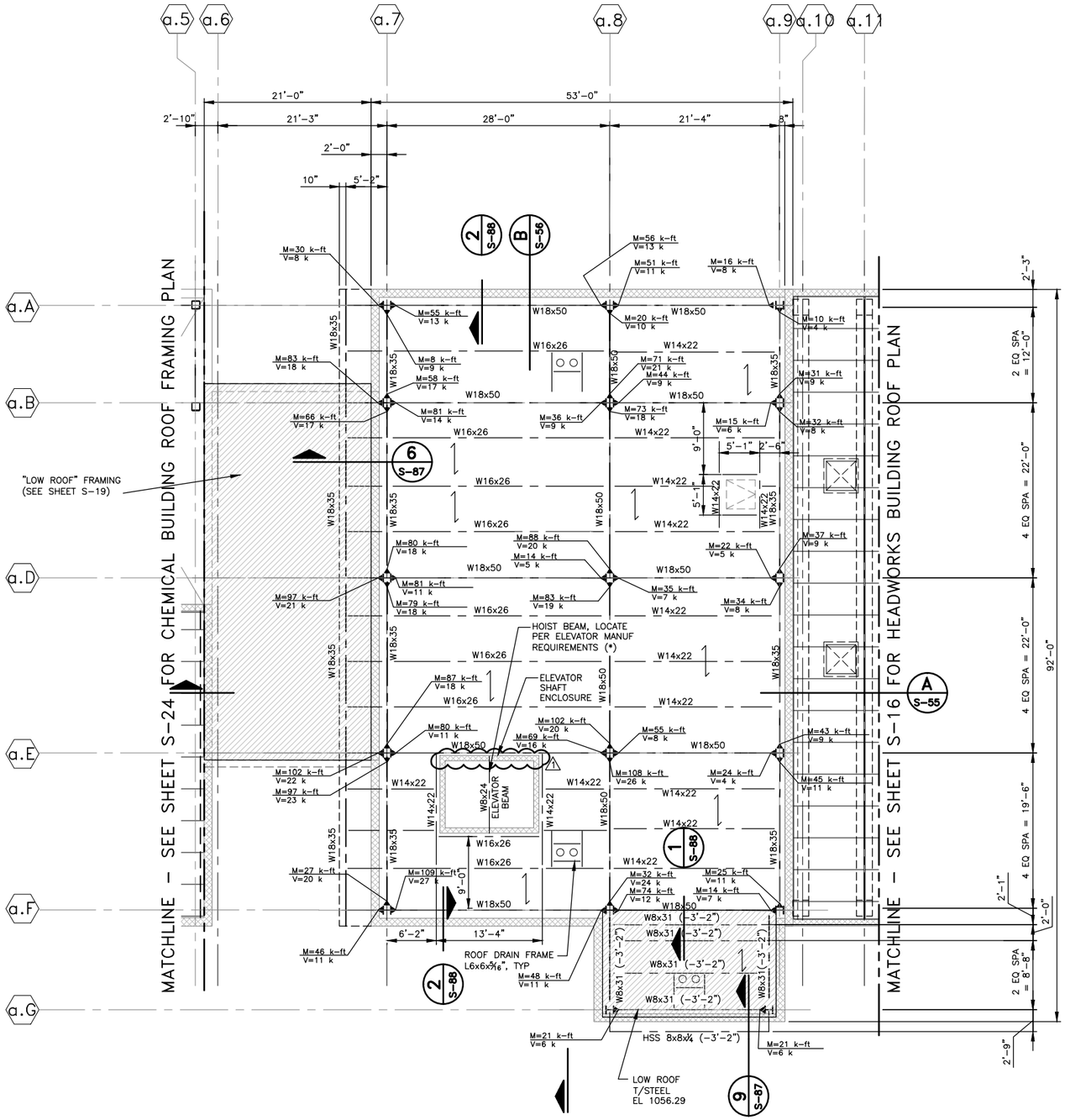

OPERATIONS BUILDING ROOF FRAMING PLAN

SCALE: 1/8"=1'-0" EL 1059.50

NOTES:

1. ⊥ REPRESENTS THE BEAM/GIRDER TO COLUMN CONNECTION, SHALL BE A MOMENT CONNECTION. THE INDICATED MOMENT AND SHEAR FORCES ( ) ARE A MAXIMUM SERVICE LOADS AND MAY NOT BE REDUCED FOR WIND. (MOMENTS ARE GIVEN IN KIP-FEET (K-FT) AND SHEARS ARE GIVEN IN KIPS (K).
2. TOP OF ROOF STEEL ELEVATION FOR THE 2-STORY AREA IS ELEVATION 1059.50 UNLESS NOTED OTHERWISE.
3. STEEL ROOF DECK SHALL BE 1½"x20 GA PAINTED WIDE RIB DECK.
4. DECK SHALL BE CONTINUOUS OVER THREE OR MORE SUPPORTS.
5. FASTEN ROOF DECK UNITS TO STEEL SUPPORTING MEMBERS WITH ⅝"ø PUDDLE WELDS, SPACED NOT MORE THAN 12" AT EVERY SUPPORT (PLUS AT ALL SUPPORTING MEMBERS IN RIBS WHERE SIDE LAPS OCCUR).
6. FASTEN SIDE LAPS OF ADJACENT DECK SUPPORTS AT INTERVALS NOT EXCEEDING 36" OC USING SELF-TAPPING No. 10 OR LARGER MACHINE SCREWS.

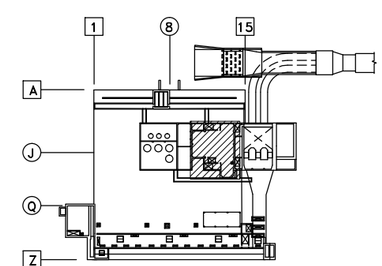

KEY PLAN
SCALE: NONE

REV#	DATE	DESCRIPTION	BY
1	6-26-15	ADDENDUM #3 - MODIFIED ELEVATOR SHAFT	DAW

PROFESSIONAL CIVIL ENGINEER BRIAN E. GOMBOS E-13742 STATE OF NEBRASKA

WADETRIM
1907 Harney Street
Omaha, NE 68102
402.345.3900
FAX 402.345.3901
www.wadetrim.com
Building relationships on a foundation of excellence

SADDLE CREEK RETENTION TREATMENT BASIN
OPW 52049
OPERATIONS BUILDING ROOF FRAMING PLAN

ISSUED FOR: DATE: BY:
BIDS 5/20/15 DAW

JOB NO. OMA2008-020

SHEET S-20

© Wade Trim Group, Inc.

C:\PW_WORK\DMCKONE\D0287905\SFP-PLTS-S-20-OPERATIONSBLDGROOFPLAN.DWG - S-20 - PLOTTED 6/29/2015 9:11 AM BY MCKONE, DAVE

ATTACHMENT 7
Electrical Sheets E-14, E-60A & E-67

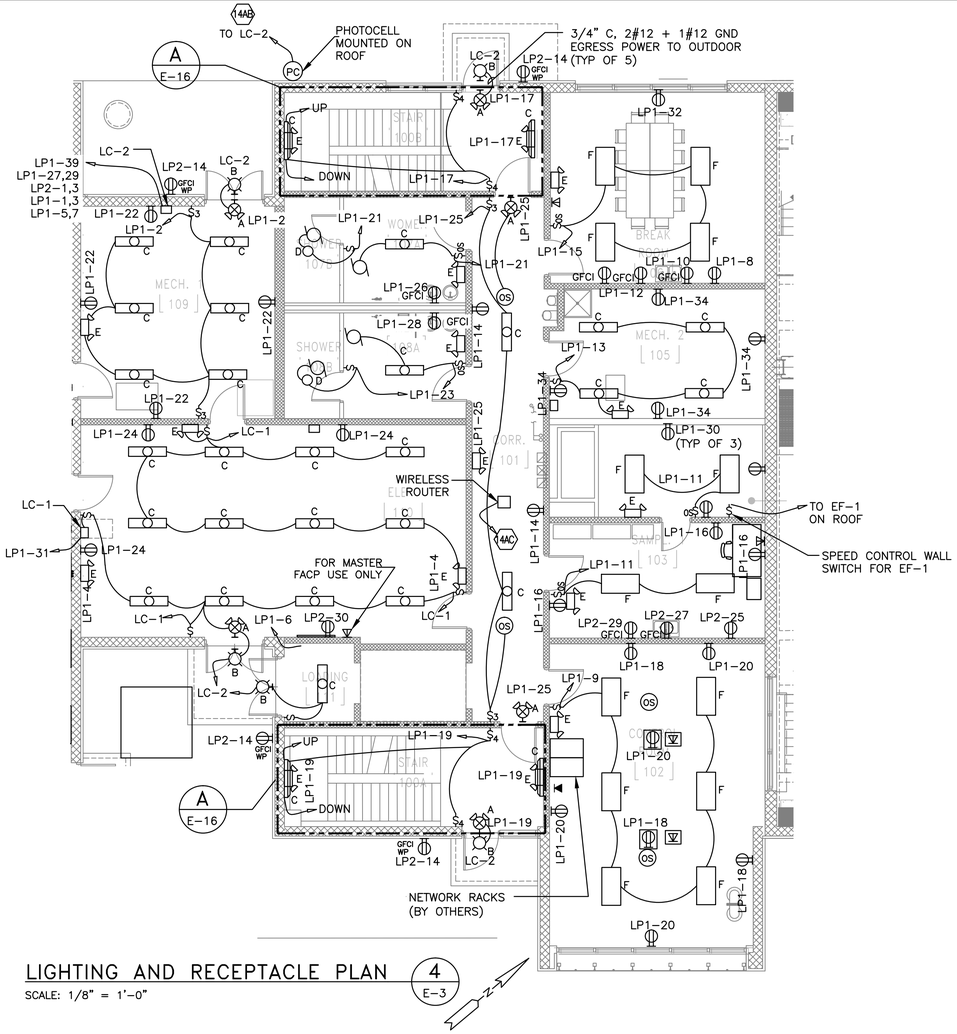

LIGHTING AND RECEPTACLE PLAN 4 E-3

SCALE: 1/8" = 1'-0"

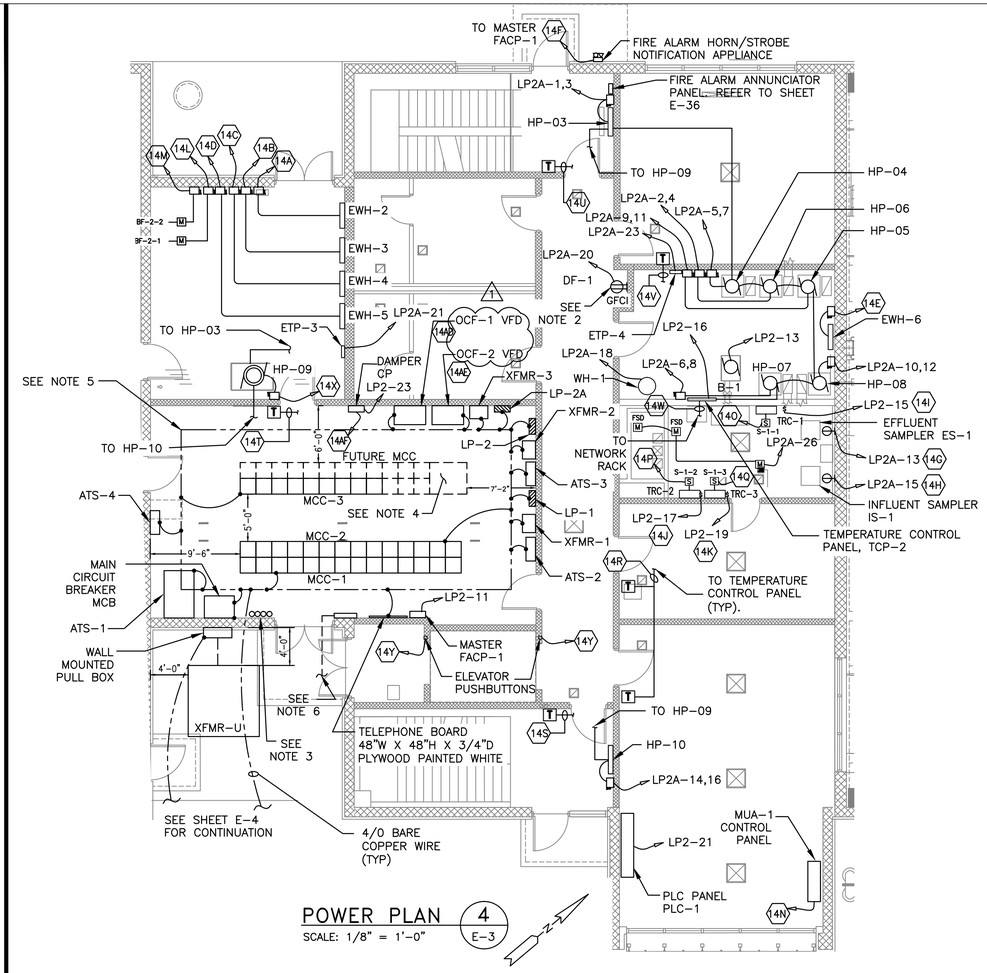

POWER PLAN 4 E-3

SCALE: 1/8" = 1'-0"

NOTES:

1. REFER TO SHEET E-11 FOR CONDUIT AND CABLE SCHEDULE, AND REFER TO ONE LINE DIAGRAMS ON SHEET E-46 FOR CONDUIT AND WIRE SIZES NOT SHOWN ON THE SCHEDULE.
2. RECEPTACLE TO BE READILY ACCESSIBLE.
3. TWO 2" SPARE CONDUITS FROM ENTRANCE AND EXIT GATES TO JUNCTION BOX. SEE E-4A FOR CONTINUATION.
4. CONCRETE PAD FOR FUTURE EQUIPMENT.
5. 4/0 THHN GREEN INSULATED CONDUCTOR INSTALLED ALONG WALLS NEAR CEILING. BONDS FROM EQUIPMENTS TO 4/0 CONDUCTOR SHALL BE MADE BY EXOTHERMIC WELDING.
6. SPARES CONDUITS TO DEWATERING PUMP STATION ELECTRICAL ROOM, VIA DUCTBANK. SEE E-26.

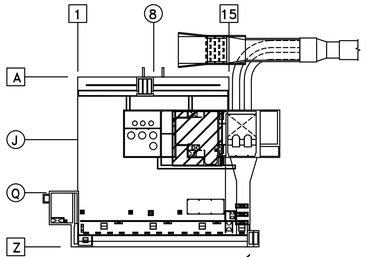

KEY PLAN

SCALE: NONE

REV#	DATE	DESCRIPTION	BY
1	06-24-15	ADDENDUM #3 - CHANGED "ODC" TO "OCF"	AS

WADETRIM
1907 Harney Street
Omaha, NE 68102
402.345.4500
FAX: 402.345.3901
www.wadetrim.com
Building relationships on a foundation of excellence

SADDLE CREEK
RETENTION TREATMENT BASIN
OPW 52049
OPERATIONS BUILDING
GRADE LEVEL
POWER AND LIGHTING PLANS

ISSUED FOR: BIDS DATE: 5/20/15 BY: DAW

JOB NO. OMA2008-020

SHEET E-14

© Wade Trim Group, Inc.

C:\PW_WORK\DWESTHOFF\D0287905\EDG-PLTS-E-14 -OPERATIONS BLDG GRADE LEVEL.DWG - E-14 - PLOTTED 6/24/2015 8:06 AM BY WESTHOFF, ONEIDA

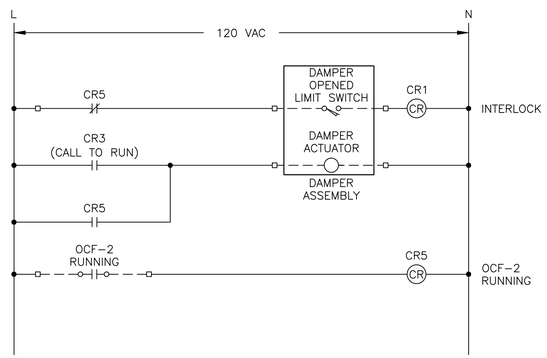

FURNISH FOR ALL SUPPLY FAN, EXHAUST FAN, AND ROOF FAN MOTOR STARTERS.

SCALE: NONE

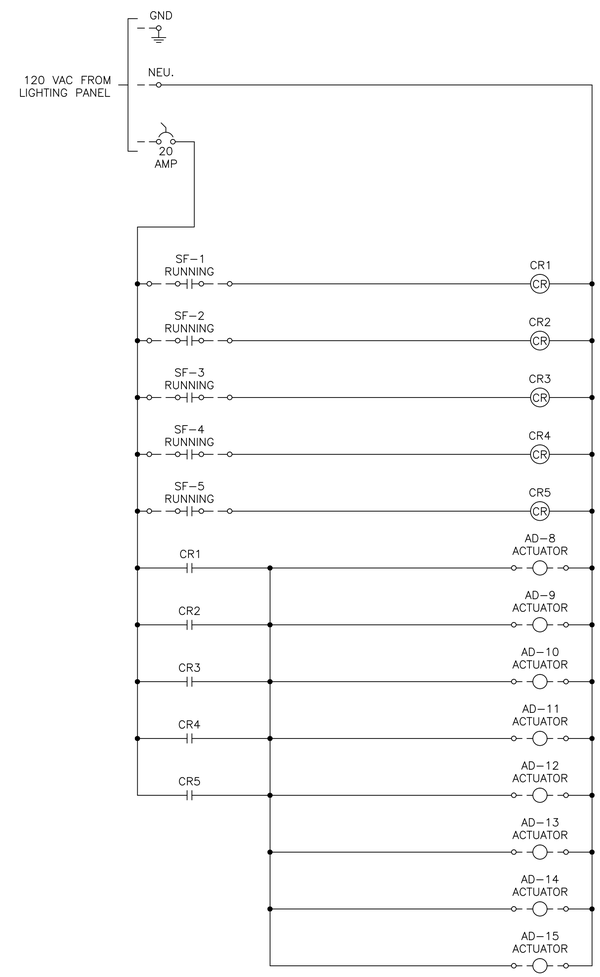

VENTILATION STRUCTURE DAMPER PANEL WIRING DIAGRAM

SCALE: NONE

NEMA 4X PANEL

3

REV#	DATE	DESCRIPTION	BY
3	07-01-15	ADDENDUM #3 – ADDED DAMPER PANEL CONTROL	AS

WADETRIM
1907 Harney Street
Omaha, NE 68102
402.345.3900
FAX: 402.345.3901
www.wadetrim.com
Building relationships on a foundation of excellence

SADDLE CREEK
RETENTION TREATMENT BASIN
OPW 52049

SCHEMATICS

ISSUED FOR: DATE: BY:
BIDS 5/20/15 DAW

JOB NO. OMA2008-020

SHEET E-60A

© Wade Trim Group, Inc.

C:\PW_WORK\OWESTHOFF\D0287905\EDG-PLTS-E-60A-SCHEMATICS2.DWG – E-60A – PLOTTED 7/1/2015 9:10 AM BY WESTHOFF, ONEIDA

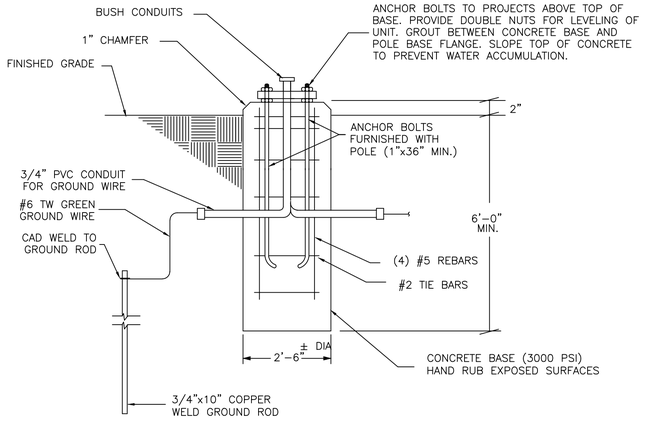

POLE BASE DETAIL (1 / E-67)

SCALE: NONE

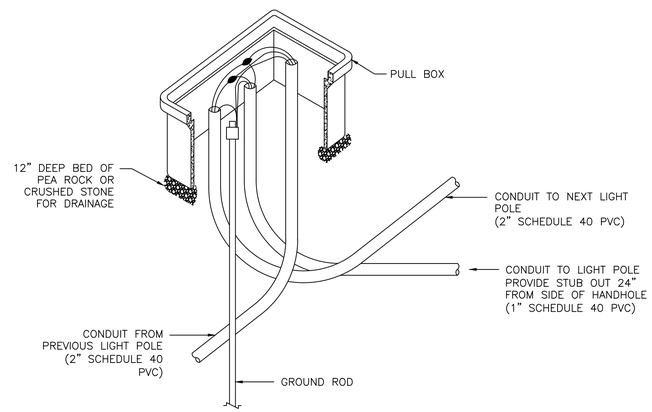

PULLBOX DETAIL (2 / E-67)

SCALE: NONE

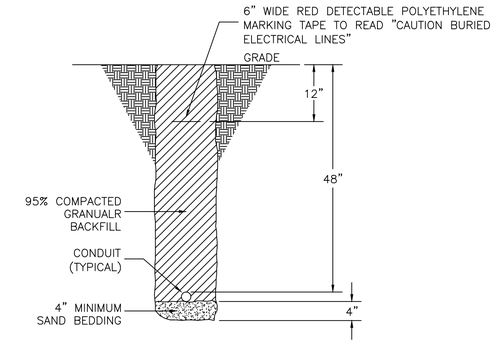

TYPICAL BURIED ELECTRICAL LINES

SCALE: NONE

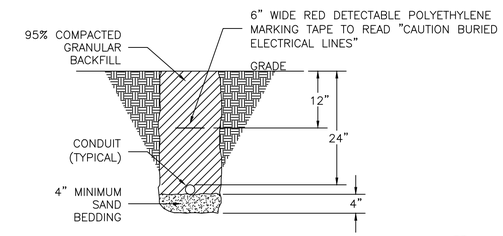

TYPICAL UNDERGROUND CONDUIT (3 / E-67)

SCALE: NONE

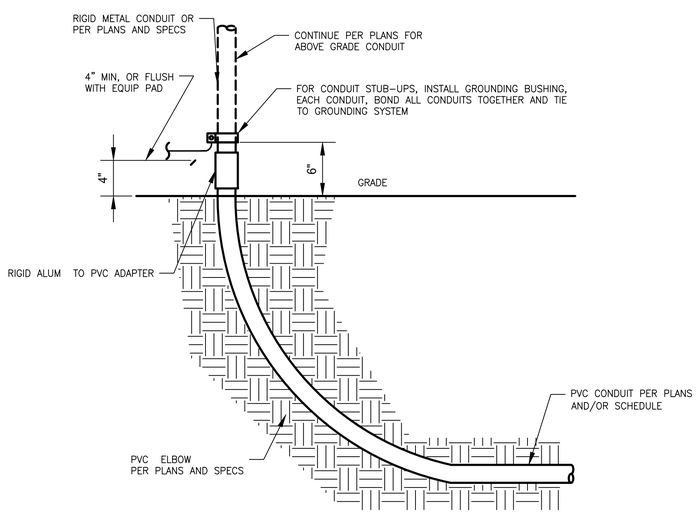

UNDERGROUND CONDUIT TRANSITION (4 / E-67)

SCALE: NONE

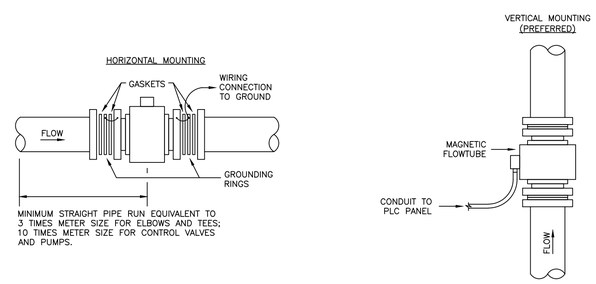

TYPICAL MAGNETIC FLOW METER MOUNTING DETAIL (5 / E-67)

SCALE: NONE

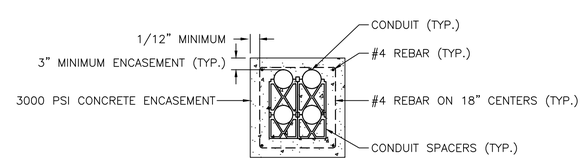

CONCRETE DUCT BANK DETAIL (7 / E-67)

SCALE: NONE

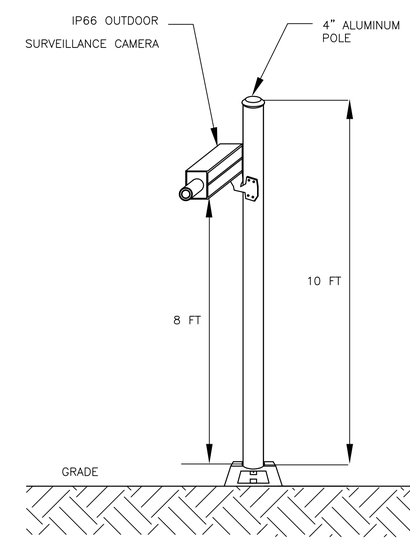

SECURITY CAMERA MOUNTING DETAIL (6 / E-67)

SCALE: NONE

REV#	DATE	DESCRIPTION	BY
1	06-24-15	ADDENDUM #3 - ADDED DETAIL 7	AS

WADETRIM
1907 Harney Street
Omaha, NE 68102
402.345.3900
FAX 402.345.3901
www.wadetrim.com
Building relationships on a foundation of excellence

SADDLE CREEK RETENTION TREATMENT BASIN
OPW 52049
DETAILS

ISSUED FOR: DATE: BY:
BIDS 5/20/15 DAW

JOB NO. OMA2008-020

SHEET E-67

© Wade Trim Group, Inc.

C:\PW_WORK\OWESTHOFF\D0287905\E06-PLTS-E-67-DETAILS.DWG - E-67 - PLOTTED 6/24/2015 7:56 AM BY WESTHOFF, ONEIDA

CLARIFICATIONS
Bidder’s Questions & Answers

Additional Bidder's Questions and Answers
Saddle Creek Retention Treatment Basin
OPW 52049

I. CONTRACTING REQUIREMENTS

1. Per the pre-bid meeting, we understand the completion date of this project is a fixed date with significant liquidated damages and EPA/NDEQ penalties. Per the contract documents the current start date is Oct 7, 2015. As this project is extremely complex and allows minimal completion time would it be allowable to start the MUD C & D landfill removal on August 1st, 2015?

The City will issue a Notice to Proceed as soon as approved. Any work preceding a Notice To Proceed would be at risk to the Contractor. All required permits related to the on-site activities would also need to be obtained prior to start of any work.

II. GENERAL REQUIREMENTS

2. Can I only bid one section of the RPF (section 23 0590 Testing, Adjusting, and Balancing, page 1309 of the RFP)?

The process you would need to follow is to contact the General Contractors that are bidding the project. and discuss with them your proposed approach. It will be up to them to divide the work in the contract among their team of subcontractors. They will be submitting an overall bid for the job to the City that includes the total pricing.

III. TECHNICAL SPECIFICATIONS

3. Please clarify the reason for the minimum raw material temperatures (for concrete) specified on Page, 8, Section 03 3000. It is not possible to meet some of the minimum temperature requirements during the winter months in Nebraska or when cooling the materials in an effort to meet Mass Concrete temperature requirements?

Specification 03 3000 has been updated to address. Refer to Addendum No. 3.

4. We would like to request the option to use Class C Fly Ash for the Flowable Fill application due to the uncertainty of Class F Fly Ash availability. We would also like to have Class C Ash approved from multiple sources

The Engineer will accept the use of Class C Fly Ash for flowable fill provided that the Contractor demonstrates there are no potentially reactive aggregates.

5. Specifically, what tests are required for the raw materials (for concrete) as outlined in Section 03 3000, PART 1, section 1.2, paragraph A.?

   Tests and results must be furnished to indicate that the raw materials for concrete are in accordance with the specified standards. At a minimum, the following should be submitted (from each source):

   - *For each aggregate, submit at a minimum: the source, sieve analysis, test of organic impurities, and certification of conformance to the specifications.*
   - *For each cement, submit at a minimum: the type of cement, mill certificate, mill report, and certification of conformance to the specifications.*
   - *For each supplemental cementitious material, submit at a minimum: the type of supplemental cementitious material, mill certificate, mill report, and certification of conformance to the specifications.*
   - *For each admixture, submit at a minimum: the type of admixture, manufacturer's product literature including recommended dosage, and certification of conformance to the specifications.*
   - *For each fiber, submit at a minimum: the type of fiber, manufacturer's product literature including recommended dosage, and certification of conformance to the specifications.*

6. Initial Concrete Temperature Limit: The specifications appear to require that you precool the concrete to be in the range of 45 to 70°F prior to placement. Please clarify if the concrete temperature at the point of placement can be warmer than 70°F provided that the maximum temperature and the maximum temperature difference (both after the concrete is placed) do not exceed the specified limits.

   Specification 03 3000 has been modified to eliminate the requirement for a maximum as delivered temperature. Refer to Addendum No. 3.

7. Minimum Cement Content: Minimum cement contents are specified; the mass concrete appears to require 5000 psi concrete which is specified to contain at least 705 lbs./CY of cementitious materials. Eliminate minimum cement content requirements, and rely on strength

   Specification 03 3000 has been updated. Refer to Addendum No. 3.

8. Portland Cement Replacement Levels: Fly ash can replace 0-15 wt% of portland cement, and slag cement can replace 25-40% of portland cement.
   Allow higher portland cement replacement levels; specifically:
   a) up to 75% of the portland cement can be replaced by slag cement
   b) up to 50% of the portland cement can be replaced by class f fly ash (do not use class C fly ash).

   Specification 03 3000 has been updated. Refer to Addendum No. 3.

9. Time of Thermal Control: Section 3.15.D.3 of Specification 033000 only appears to require thermal control for a period of 7 days. The specifications defer to the mass concrete requirements of ACI 301, which requires thermal control be continued until the hottest portion of the concrete cools to within 35°F of the average air temperature. Please clarify the time of thermal control.

Specification 03 3000 has been updated. Refer to Addendum No. 3.

10. Quantity of Temperature Sensors: Section 3.15.D of Specification 033000 requires 3 sets of 3 temperature sensors (9 total per mass concrete placement, unless additional backup sensors are also required). The specifications defer to the mass concrete requirements of ACI 301, which requires 1 set of 2 temperature sensors, plus a backup for each (4 total per placement). ACI 301 provides clear requirements for where to install sensors. The specification requirements are not entirely clear.

Please re-consider the number of sensors, and define specifically where to install them (depth of cover, backup at each location, etc.).

Refer to question 64 of the Bidders Questions and Answers submitted with Addendum No 2. The Owner's materials testing consultant will be responsible for installation and monitoring of thermal monitoring.

11. Concrete Raw Material Temperature: Section 2.11.B.1 of Specification 033000 requires particular material temperature ranges for aggregates and water. Please delete the specified minimum aggregate and water temperatures. Defer to Guidance in ACI 306R-10 for maximum temperature limits. Add a minimum concrete temperature to Section 3.14.B.

Specification 03 3000 has been updated. Refer to Addendum No. 3.

12. Combined Mass and Non-mass Placements: You indicated that you are required to place deck beam and the deck slab in the same placement, and the combined deck slab and beam (at the beams) exceed 2.5' minimum dimension and therefore must be treated as mass concrete. You indicated that you are not allowed to construct them separately (the beams first, then the deck on top). Allow beams to be cast separately from decks.

Deck beams and deck slab must be cast monolithically. The placement of the deck beams and deck slab in concert with one another will not be considered a mass concrete placement. Specification 03 3000 has been modified. Refer to Addendum No. 3.

13. Please clarify the reason for the minimum raw material temperatures (for concrete) specified on Page, 8, Section 03 3000. It is not possible to meet some of the minimum temperature requirements during the winter months in Nebraska or when cooling the materials in an effort to meet Mass Concrete temperature requirements? (This question was asked previously, but not addressed)

Specification 03 3000 has been modified. Refer to Addendum No. 3.

14. We would like to request the option to use Class C Fly Ash for the Flowable Fill application due to the uncertainty of Class F Fly Ash availability. We would also like to have Class C Ash approved from multiple sources (This question was asked previously, but not addressed)

The Engineer will accept the use of Class C Fly Ash for flowable fill provided that the Contractor demonstrates there are no potentially reactive aggregates.

15. Specifically, what tests are required for the raw materials (for concrete) as outlined in Section 03 3000, PART 1, section 1.2, paragraph A.? (This question was asked previously, but not addressed)

Tests must be furnished to indicate that the raw materials for concrete are in accordance with the specified standards. At a minimum, the following should be submitted:
For each aggregate from each source, submit at a minimum, the source, sieve analysis, test of organic impurities, and certification of conformance to the specifications.

For each cement, submit at a minimum, the type of cement, mill certificate, mill report, and certification of conformance to the specifications.

For each supplemental cementitious material, submit at a minimum, the type of supplemental cementitious material, mill certificate, mill report, and certification of conformance to the specifications.

For each admixture, submit at a minimum, the type of admixture, manufacturer's product literature including recommended dosage, and certification of conformance to the specifications.
For each fiber, submit at a minimum, the type of fiber, manufacturer's product literature including recommended dosage, and certification of conformance to the specifications

16. "If a fine aggregate meets the requirements of ASTM C 33, Paragraph 6.3, Note #4, can it be used in all structural concrete?"

Non-conforming material will be permitted with special approval if acceptable evidence of satisfactory performance is provided.

17. According to ACI 306, cold weather concreting procedures apply when the ambient temperature is below 40 degrees. In order to stay below the maximum temperature differential of 35 degrees when relating to mass concrete, would the engineer consider lowering the minimum concrete temperature to 50 degrees?

Specification 03 3000 has been modified. Refer to Addendum No. 3.

18. With regards to Specification Section 03 4113 – Precast Concrete Hollowcore Planks, please reference the design requirements of subsection 1.8, item C1 denoting that the roof assembly shall be designed for a superimposed live load of 100 psf. Confirming this is as intended when comparing to the prescribed superimposed live load of 30 psf on the individual plans. If the 100 psf is to be considered, is it to be applied simultaneous with the rooftop mechanical and monorail crane loads?

The superimposed live load of 100 psf is not to be applied simultaneously with other roof loads.

19. Reference Specification Section 03 4500. 2.16.A: Please provide the design reference sample. If no sample is available and the following is acceptable to the Architect, please indicate to use one of the manufacturer's standard grey, standard white, or standard buff concrete mixes with a sandblast finish.

This sample was provided by Enterprise (sample #3946) and is a standard grey color with an as cast finish. Final approval on finish/color is to be by Engineer during construction.

20. Per Section 08 3323, "Door finish requested as...Baked-Enamel or Powder-Coated Finish: Color as selected by ENGINEER from 27 manufacturer's full range." Is that for entire door or for exterior exposed components? Doors are listed as fire rated while adjacent HM doors are not rated. Please confirm Fire Rated, Insulated, Explosion Rated. Cornell standard Fire-Rated Insulated door is not available with Explosion rating. Not an issue if it is not fire rated.

All exterior exposed components, both sides of door, and hood are to be finished as per the specification. Fire rating is not required. However, the insulation and explosion rating is still required. Refer to Addendum No. 3.

21. There are numerous doors and frames listed as FRP type Z1 and Z2. I cannot find a specification for these doors. Please provide one.

A specification for FRP doors and frames has been prepared. Refer to Addendum No. 3.

22. I would like to inquire about my products being approved in the 099610 section of the specification. Equivalent products I am suggesting are Interseal 670HS (primer) and Polibrid 705. Polibrid has been used in the Papillion and MO River locations in the past successfully.

Vendors are encouraged to bid as an equal provided they can meet the specifications and contract requirements for this project. The review of alternates will be conducted by the design team following the bid and award of the construction contract for this project. At that time, Contractors will be required to follow the product "or equal" and substitution procedures outlined in the specifications.

23. The boiler specs or control specs don't specifically call out for BacNet communication.

BACnet protocol requirement added. Refer to Addendum No. 3.

24. SF-6 is scheduled with a 10 HP motor, but a 7.5 HP motor will work. Should we keep to schedule?

Yes. Provide fan with 10 HP motor.

SF-7 is scheduled with a 1 HP motor, but a ¾ HP motor will work. Should we keep to schedule?

Yes. Provide fan with 1 HP motor.

RF-1 is scheduled with a 2 HP motor, but it requires a 3HP for the performance. We need to increase to 3HP, okay?

Agree. Provide fan with 3 HP motor. Refer to Addendum No. 3.

RF-2 is scheduled with a 1.5 HP motor, but it requires a 2 or 3 HP for the performance (1.97 BHP). We need to increase to 2 or 3 HP, okay?

Agree. Provide fan with 3 HP motor. Refer to Addendum No. 3.

25. Are Supply Fans or Exhaust fans to be spark proof construction? We did not see where this was noted?

Supply Fans SF-1 through SF-7, and RF-3 shall be provided with spark proof construction. Refer to Addendum No. 3.

Do Supply Fans or Exhaust fans require Explosion proof motors?

RF-3 shall be provided with an explosion proof motor. Refer to Addendum No. 3.

Disconnects for Supply & Exhaust Fans. NEMA rating required? Non-Fused or Fused?

Refer to Drawing G-3 for NEMA ratings. Disconnects shall be "non-fused".

26. Sensara Systems requested to be added to the approved vendor list for on-site cameras.

Vendors are encouraged to bid as an equal provided they can meet the specifications and contract requirements for this project. The review of alternates will be conducted by the design team following the bid and award of the construction contract for this project. At that time, Contractors will be required to follow the product "or equal" and substitution procedures outlined in the specifications.

27. We woud like the request that the following manufacturer's be named as 'or equal' for bidding purposes on those items listed below being proposed for the subject project.

AbsolutAire	Fuel Fired Make-up Air Heaters (Section 23 7413)
MK Plastics	Fans (Section 23 3400)
MK Plastics	Centrifugal Fiberglass Reinforced Plastic Fans (Section 23 3416.13)
Twin City Fan	Fans (Section 23 3400)

Vendors are encouraged to bid as an equal provided they can meet the specifications and contract requirements for this project. The review of alternates will be conducted by the design team following the bid and award of the construction contract for this project. At that time, Contractors will be required to follow the product "or equal" and substitution procedures outlined in the specifications.

28. Section 23 2113.33 Geothermal Loop Heat Exchanger System – the backfill materials references back to Section 31 2316. There are Granular Materials and Coarse Aggregates specified in this section. Is the intention to backfill the Geothermal Loops with a granular material, or with soils? And, if it is granular materials, what is the total height required?

Soil backfill for a minimum of 3'-0" above the geothermal loops is recommended. Granular material, contingent on the engineer's approval, could be acceptable provided if it is fine enough to not present a danger to the HDPE pipe.

For clarification, Section 23 2113.33 referenced Section 31 2316 for backfill materials because of any structural requirements that might exist due to the parking lot, etc. at grade level.

29. Can we use fill sand for backfill of the basin walls? This is a much more economical method instead of using dirt/clay.

Granular material shall be used for backfilling within 3 feet (1 m) of buried structures as specified in Section 31 2316, Article 3.5.C. Suitable granular material is also acceptable backfill for other areas not occupied by the new work or areas covered by Section 31 2316, Article 3.5.C.

30. In reference to Granular Backfill (31 2316, 3.5.C), could you please clarify if this requirement includes the top of the basin structure.

Yes. Please reference Question 28 for backfill above the geothermal loops that are above the basin.

31. Allowable TERS Ground Deformation identified in Section 31 5000 para 3.11: Vertical movement +/- .5 inch, lateral movement +/-.5 inch. Complying with these tolerances is untypically restrictive and will require the contractor to install a single source earth retained system. Even if secant pile walls are installed, they may not meet the stated deformation specification. Is this your intent?

The allowable ground deformation section has been deleted from the specification. Contractor will be responsible for providing temporary earth support systems that meet the performance and design requirements identified in Specification 31 5000, Paragraphs 1.1.C and 1.1.D.

32. 63” DR 26 – would SDR 32.5 be considered. It would have a larger ID and would carry a 64 psi Working Pressure Rating. ID would be 58.8”.

Vendors are encouraged to bid as an equal provided they can meet the specifications and contract requirements for this project. The review of alternates will be conducted by the design team following the bid and award of the construction contract for this project. At that time, Contractors will be required to follow the product “or equal” and substitution procedures outlined in the specifications.

33. I would like to know if HDPE could be considered for the above ground odor control piping as an alternate to the fiberglass in the size of 60”, 54”, 48”, and smaller.

No. HDPE will not be considered for the above ground odor control piping.

34. The following is a comment from Hydrogate
For the Sluice and Slide Gates
- Cast Iron w/ 2% Ni operator housing – We use Ductile Iron
- Cast Iron w/ 2% Ni Yoke – We use painted Carbon Steel
- Bronze Stem Couplings – We use Stainless Steel

For the Backwater Gates
Resilient Seal on the outside of the seating faces in addition to the bronze seating faces – From our experience this does not increase the performance of the gate and would just be an added cost.

Vendors are encouraged to bid as an equal provided they can meet the specifications and contract requirements for this project. The review of alternates will be conducted by the design team following the bid and award of the construction contract for this project. At that time, Contractors will be required to follow the product “or equal” and substitution procedures outlined in the specifications.

35. Hamlett Environmental is the local representative for Westech and we respectfully request your review and addition of Westech as an approved manufacturer of this equipment.

Vendors are encouraged to bid as an equal provided they can meet the specifications and contract requirements for this project. The review of alternates will be conducted by the design team following the bid and award of the construction contract for this project. At that time, Contractors will be required to follow the product “or equal” and substitution procedures outlined in the specifications.

36. What is the stop log stack height? The (3) frames appear to go from elevation 994.00' up to elevation 1,031.50' (37.50 feet high).We know they want (3) frames and only (1) set of logs, but how many logs? Are all logs to be 12" high? Do they want (37) logs?

Stop logs shall extend from 994.00 up to 1016.00. Stop logs may be 1 or 2 feet high, each. Refer to Addendum No. 3.

37. What are the head, and head conditions for the stop logs? 31 feet of head? Seating head? Unseating head? Both seating and unseating head?

Stop logs are to prevent flow through a screen channel in the event a screen is removed for maintenance, and hence see minimal head. Design for 5' differential, both directions.

38. Pulsafeeder is not named as an approved manufacture on the peristaltic pumps, was this an oversight?

Vendors are encouraged to bid as an equal provided they can meet the specifications and contract requirements for this project. The review of alternates will be conducted by the design team following the bid and award of the construction contract for this project. At that time, Contractors will be required to follow the product "or equal" and substitution procedures outlined in the specifications.

IV. PLANS

39. Per sheet G-7 Temporary Support of Excavation minimum Design Criteria: At the toe of the TER as shown requires a minimum design Pe=110H PSF. Our soils consultants find this to be untypically restrictive. Within your owner furnished geotechnical report, Terracon recommended a Pe=50H; industry standards typically require an equivalent earth pressure of Pe=40H. Our soils consultant requests you review said minimum design strength and modify it to more uniform construction standard. Non modification of these parameters will significantly increase construction costs.

Sheet G-7 has been updated. Refer to Addendum No. 3.

40. During discussions with dirt contractors, it is requested sheet C-7 be modified to show only existing contours for takeoff purposes. Existing contours are presently unreadable. Can this please be furnished for their convenience?

The sheet will be provided for convenience. Refer to Addendum No. 3.

41. Per sheet C-10 item CD-1 "Install Cofferdam," can a detail be provided as to the engineer's intent?

Cofferdam removed. Refer to Addendum No. 3.

42. Concerning the removal of the abandoned 42” sanitary sewer line that is crosses the site from NW to SE – Again on sheet D-1, key note #11 says to remove the existing 42” sewer (approximately 300 L.F.). Are we only removing a portion of this pipe that is in conflict with the new construction, or is the intent to remove all of it?

Only the portion in conflict with the new construction is to be removed.

43. Could you please provide clarification for the extents of abandonment of the existing 36”/42” sanitary sewer outlet from the Dupont Grit Station please? It is shown on sheet D-1 of the plans but I can’t find where the limits are shown or discussed anywhere else in the plans or specifications.

The pipe is to be abandoned in place from the manhole structure outside of the existing Grit Building shown on D-2 to the connection to the existing 60” sewer traveling adjacent to the Little Papillion Creek.

Does “abandon” mean to fill this pipe with flowable fill, or cap the ends and leave as is?

No flowable fill is necessary. Pipe to be abandoned per City of Omaha standard plate 700-24.

44. There is one aluminum Mapes canopy on the ventilation structure. While Mapes is the basis of design, they have numerous models and products that could be used. Please provide more information or a spec for this product.

The note which refers to the proposed Mapes canopy will be updated to provide more information. Refer to Addendum No. 3.

45. Hydraulic Elevator:
With the travel distance of 32’0” a three stage hole less jack is required. With the model you can stay with a 4’0” pit and the overhead height will be approximately 13’2”. If you utilize a 5’0” pit the overhead height is reduced to 12’8”. With the three stage jack and 4’6” center opening door the hoist way will need to increase to 7’ 11”W x 11’2”D.
The spec calls out for Class A loading. With this classification the loading cannot exceed 25% capacity (product and pallet jack cannot exceed 1125 lbs.). My concern here is when loading the aluminum sill will get damage over time. Going to a C loading will be better to handle the loading of product that we discussed.

Drawings and specifications updated to accommodate elevator design concerns. Refer to Addendum No. 3.

46. Reference Section A/A-15: Please confirm that the 4" precast cladding that appears to be shown in the section is not required and is a drawing error.

This is not a drawing error. Please refer to floor plans and applicable sections for required construction of 15" and 12" precast wall panels.

47. Please confirm the precast bearing elevation between GL a.8 and a.9 South of a.g is 1030.5.

Coordinate with structural foundation steps. Precast to be 8" minimum below adjacent grade.

48. Reference A/A-25: Please confirm manufacturer's standard ½" chamfer is acceptable at the exterior side of the panel to panel joints and the interior can be an eased edge.

This is acceptable at the interior side. The exterior side is to match the detail shown in the next question (Reference B/A-25) below.

Reference B/A-25: Is the below profile an acceptable interpretation of the detail shown. Some draft of the edges will be required for removal from formwork.

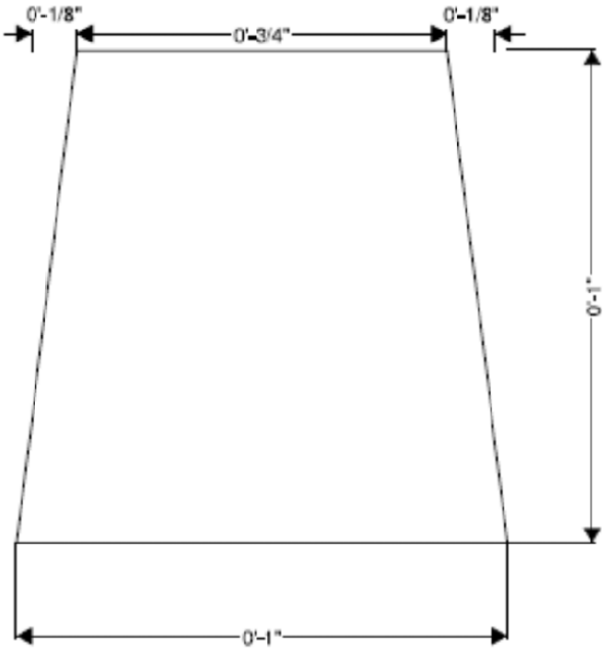

Yes, this is acceptable.

49. Sheet S-1, Note 13 specifies synthetic fibrous reinforcement at all fillet concrete. Please clarify the type & dosage of this material.

Fibers for concrete shall be ENDURO 600 polypropylene/polyethylene high performance macro-monofilament fiber, by Propex Concrete Systems. Dosage rate shall be 8 to 15 lbs. per cubic yard.

50. Can the basin walls be poured full height? Vertical CJs can still be placed at 75’ max per addendum 2. ACI requirements regarding the free falling of concrete will still be followed. This will lower cost and accelerate the schedule.

No.

51. Can we shrink the size of the slab pours from the information given in addendum 2? The concrete suppliers can NOT supply concrete at a rate fast enough to pour a 150’ x 150’ section.

Yes. The joint locations provided in Addendum No. 2 are the minimum number of joints required.

52. Per the Beam Schedule, the stirrup column has size & spacing. In the size column, it notes the size of the stirrup and includes either a 2-leg or 4-leg. What is this referencing to?

CONCRETE BEAM SCHEDULE

SIDE BARS (SKIN REINF.)		STIRRUPS (CLOSED WITH 135 DEG. HOOKS UNLESS NOTED)		
& E	REMARK	SIZE	SPACING	
#6	EA FACE	#4 (2-LEG)	12"	
#6	EA FACE	#4 (2-LEG)	10" @ ENDS 12" @ CENTER	
#6	EA FACE	#4 (2-LEG)	10" @ ENDS 12" @ CENTER	
#6	EA FACE	#4	6" @ ENDS 12" @ CENTER	
#6	EA FACE	#4 (2-LEG)	12"	
#6	EA FACE	#4 (2-LEG)	12"	
#6"	EA FACE	#5 (4-LEG)	6"	UPTURNED BEAM
#4"	EA FACE	#4 (2-LEG)	12"	

This refers to the required number of vertical legs of the stirrup. Where no notation is provided, the intent is that stirrups will have 2 vertical legs.

53. Please clarify if precast columns are required at GL a.2 & a.3 at GL a.e (above the CIP C-504)

a. Section B / S-59 does not show a column.
b. Plan view on S-24 appears to show an outline of a column.
c. Architectural drawings appear to show columns

Columns are not required above the cast in place struts.

54. Are we supposed to include the Operator Support yokes (shown on S-68)? They're not mentioned in the gate specification. Details are on sheet S-72.

Are we supposed to include the ¼" checkered plates which go under the yokes? They're not mentioned in the gate specification.

Are we supposed to include the Stem Guide Supports (shown on S-49) which go between the wall and the stem guides? Details are on sheet S-88.

Yes, Furnish and install all of these items. Coordinate with equipment manufacturer certified shop drawings.

55. Please confirm precast girders are required at the Chemical Treatment Building with a section similar to the Headworks Building.

d. Sections on S-48 and S-59 appear to show precast girders.
e. Plans do not indicate a size at this location.

Girders are required in the Chemical Building. Drawing S-24 shows the roof plan for the Chemical Building and the two (2) precast girders at column lines "a.2" and "a.3" between column lines "a.c" and the south edge of the building. The Contractor is to select a suitable beam size to resist the specified loads so long as the beam does not interfere with the monorail beam.

56. Reference Sheet S-31: Please provide a precast beam size required, or the maximum depth allowed.

Beam depth shall not exceed 48 inches.

57. The interior cast in place walls in the operations building (elevation 1013.50) do not have sections showing reinforcing except for those on B/S-56 & A/S-55. Will it be safe to assume these walls will be reinforced with #8 @ 8"cc E.F. for the vertical and #8 @ 12"cc E.F. for the horizontals?

It is acceptable to assume #8 @ 8"cc E.F. for the vertical and #8 @ 12"cc E.F. for the horizontals.

58. What is the vertical bar location for the masonry walls like stair well A, B and elevator shafts.

The vertical reinforcing shall be #5 @ 32". Refer *to Addendum No. 3.*

59. What is the bond beam location for the masonry walls?

Per "Masonry Wall Opening Detail" on S-44, a bond beam is located 2'-0" above the masonry opening.

60. Sheet S-45, Detail # 1 Haunches for precast utility tunnel are indicated to be 8” x 8”, per local precast companies their abilities are 9” x 9” haunches. Is the 9” x 9” haunch acceptable?

Yes.

61. On sheet S-45 about a “Step Up in Roof Slab”. Could you provide some type of detail, or describe how the utility tunnel is supposed to accommodate this 1’ difference in height.

The internal height of the precast concrete box section shall be reduced to 6’-0” in this area.

62. Is the 3’ thick slab below the 120” influent pipes considered mass concrete? By specification, the smallest dimension is greater than 30”; therefore, it is mass concrete. Can this be done using standard concreting procedures?

Specification 03 3000 has been updated. Refer to Addendum No. 3.

63. On Sheet P-10 it appears the floorstand is mounted directly on the concrete slab, so a wall bracket would not be required. If this is not correct, please advise. As with the other valves, this one is located in the middle of the tank. It looks like the use of a standard stem guide is not possible. I scaled the drawing it looks like the extension stem is over 3’ away from the wall. We can either use custom long arm stem guides or the valve could be moved closer to the wall. If you would like to address through addendum that would be appreciated.

It is correct that the operator is to be mounted on a concrete slab. Custom “long arm” stem guides shall be used where manufacturers standard product does not extend from wall far enough.

64. In the schedule on P-18, gates SG-1-1 and SG-1-2 (the 12” x 120” gates) have 30 feet seating head and 5 feet unseating head. However, looking at the drawings, it appears that those gates have the opposite, 30 feet unseating head and 5 feet seating head. It will make a big difference in price, because to get to a 30’ unseating head gate design we’ll need to go from a medium modular gate up to a heavy modular gate.

Refer to Addendum No. 3.

65. MV-1-1 and MV-1-2 are shown with only one stem guide per assembly (DWG P-12 attached). The valves appear to be over 3' from the nearest wall to add more stem guides. Are you ok with only one stem guide on such long stems, or should other custom long stem guides be added? Another option would be to move the valves closer (inside of 3') to the main wall so that additional guides could be used to support the stems. If time permits, please address through addendum. Please let me know if you have any questions.

Refer to Addendum No. 3.

66. Sheet E-4 shows the concrete encased duct bank with electric hand holes throughout the site. Do you have a detail for the concrete encased duct bank with reinforcement if required, and concrete strength?

A detail has been added to the plan set. Refer to Addendum No. 3.

67. Are there any minimum sizes required for the hand holes?

Hand holes should be sized per NEC Article 314.28.

68. In regards to the type of conduit required in concrete walls, concrete slabs, and precast please address the following: The specification calls out for exposed and exterior conduit to be Aluminum Rigid Conduit, and PVC SCH 40 underground; however, some of your fixture details on plan sheet E-58 show conduit and a cast box recessed in the building walls. Please clarify.

Use Schedule 40 PVC when it is in poured concrete, unless otherwise noted. Any conduit surface mounted to concrete shall be rigid aluminum. If a hole is cored through a concrete wall and only passes through, then the conduit shall be rigid aluminum, unless otherwise noted.

Regarding the exterior light fixture details on E-58, there are exterior metal panels that are mounted onto the surface of the precast concrete walls (with some gap in between); for these installations, the precast concrete would likely be cored along with a hole through the metal panel. A hole can be cut in the metal panel so that the cast box is mounted flush to the metal panel and then the light fixture would mount to the box. We anticipate that the contractor would route the conduits exposed within the building rooms and core through the walls where needed.

69. The Odor Control Fans OCF-1, 2, and 3 VFDs shown to be fed from MCC-3. What room and building are these VFDs located? Doesn't look like they are part of the MCC-3 piece of equipment?

Drawing E-51 shows OCF-1, OCF-2, and OCF-3 fed from MCC-3. The OCF-3 VFD is mounted directly into an MCC bucket since it is only 20 HP. Since OCF-1, and OCF-2 are 150 HP and 100 HP, respectively, and require standalone 18-pulse VFD panels, MCC-3 only has a feeder breaker to feed each of these two VFD panels. The OCF-1 and OCF-2 VFD panels are located in the electrical room on drawing E-14 and are labeled as ODC-1 VFD and ODC-2 VFD. The labels will be changed for consistency with other drawings. Refer to Addendum No. 3.

70. What type of hand holes are to be used for this project? Detail 2 of sheet E-67 shows what looks like a hand hole similar to what Quazite or Hubbel makes. Spec section 26 0510-12, Electric Concrete Pull Box sounds more like a precast manhole, which is much more substantial in price and install.

The Electric Concrete Pull Box (precast manhole) will be required for most installations, sized per NEC Article 314.28. For installations where a 13" x 24" handhole will suffice based on the NEC sizing, a polymer concrete handhole such as a Quazite box may be used in non-vehicle traffic locations.

71. Can we use EMT type conduit in the operations building on grade level and second floor? Plan Sheets E-14 and E-15?

EMT type conduit is not allowed for use on this project.

72. Regarding the Ventilation Structure Ads. They are controlled by a Ventilation Structure Control Panel shown on plan sheet E9. Who provides this control panel or where is it specified?"

The electrical contractor is responsible for providing the panel. A Ventilation Structure Wiring Diagram was added to sheet E-60A. Refer to Addendum No. 3.