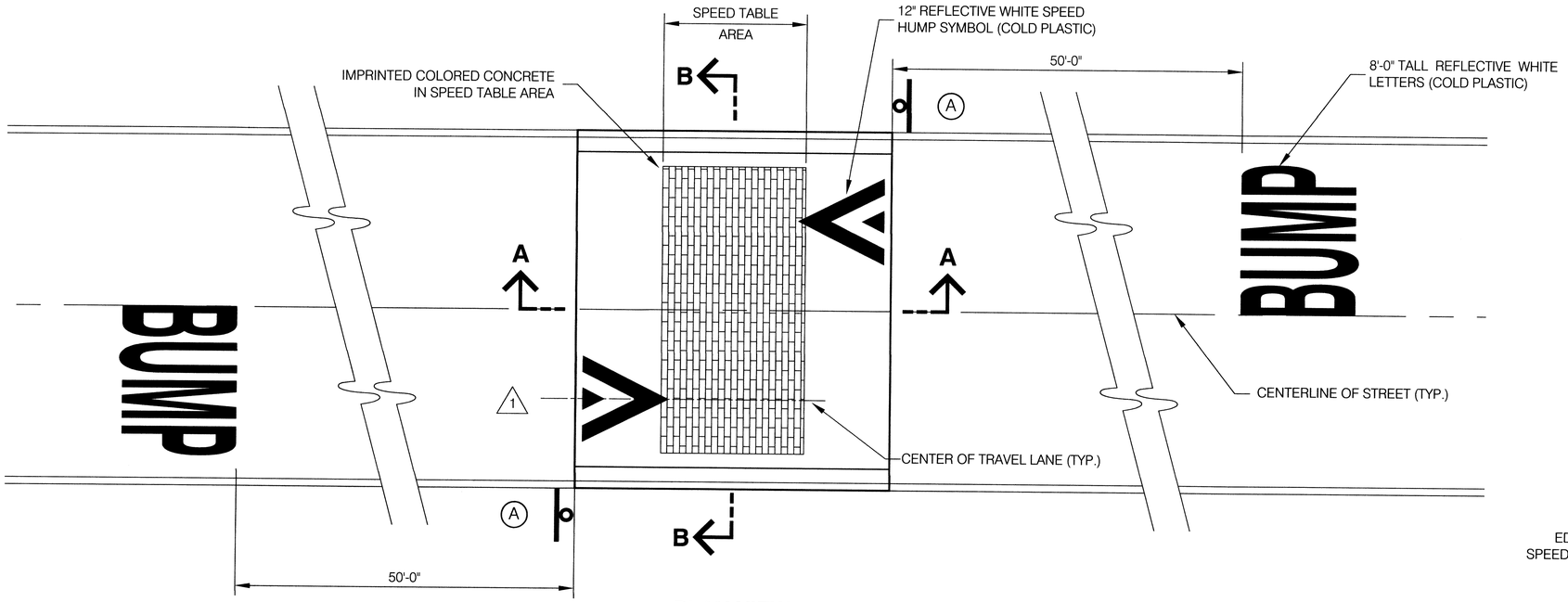

PLAN VIEW

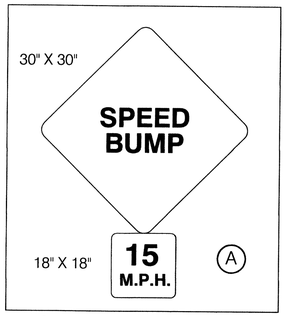

SIGNING LEGEND

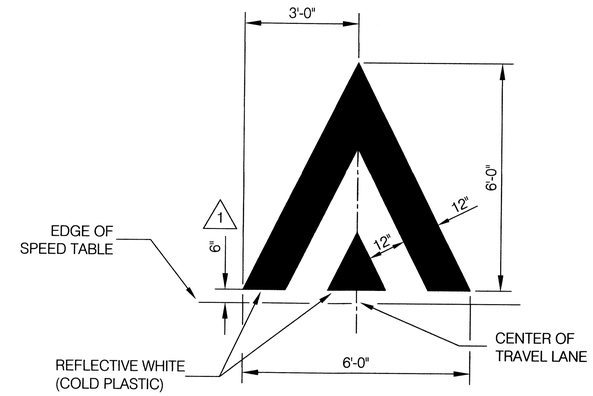

SPEED HUMP SYMBOL

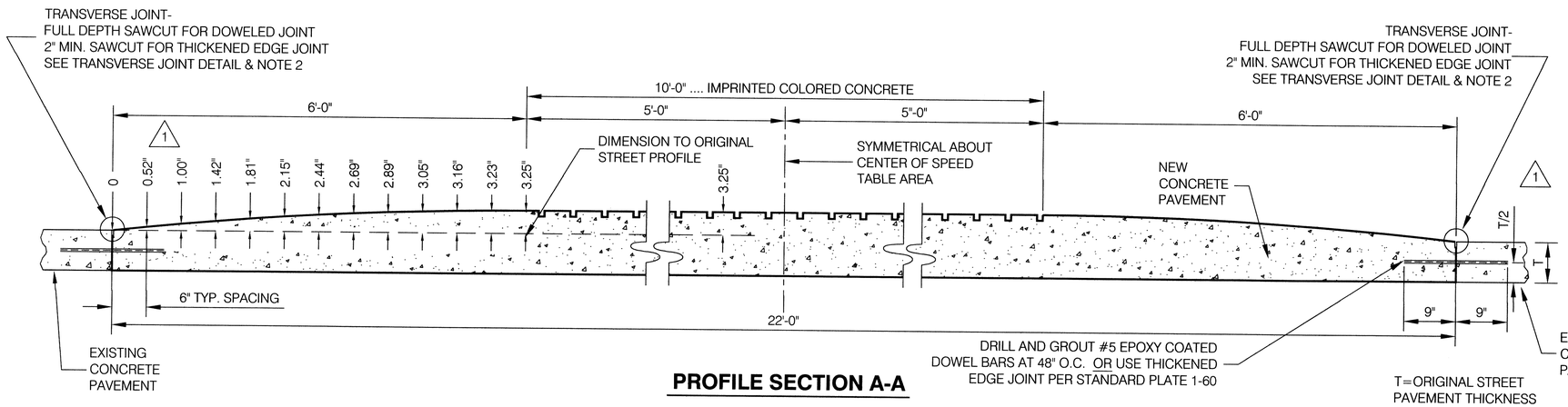

PROFILE SECTION A-A

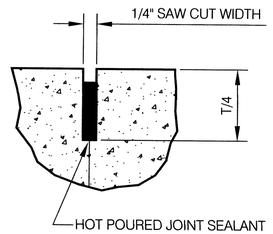

LONGITUDINAL JOINT DETAIL

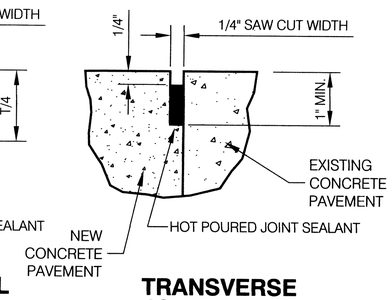

TRANSVERSE JOINT DETAIL

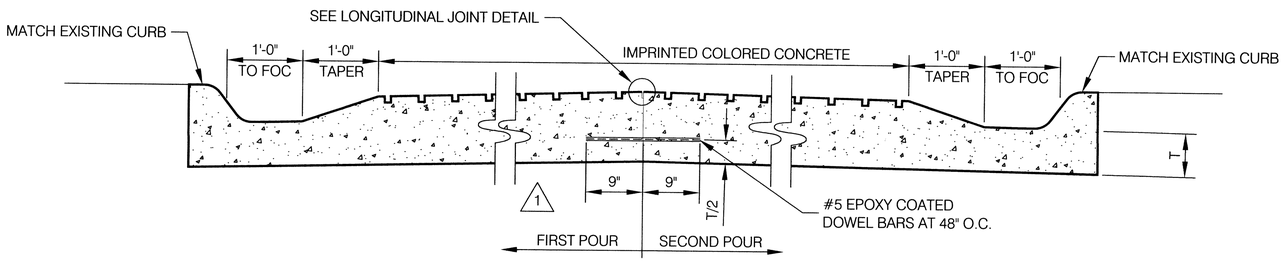

TYPICAL SECTION B-B

NOTES

1. SIGNS ARE TO BE INSTALLED AT THE SAME TIME THE CONCRETE TABLE IS INSTALLED.
2. IN SOME SITUATIONS, A TRANSVERSE JOINT MAY BE LOCATED BEYOND THE EDGE OF THE SPEED TABLE, FOR EXAMPLE: TO REPLACE ADDITIONAL PAVEMENT OR TO MATCH AN EXISTING TRANSVERSE JOINT.

1	REVISION 1/13/2011	CITY ENGINEER / PUBLIC WORKS DIRECTOR	CITY OF OMAHA — PUBLIC WORKS DEPARTMENT
			SPEED TABLE DETAILS IMPRINTED CONCRETE SPEED TABLE
			STANDARD PLATE 6-91 — SHEET 3/3
			ISSUE DATE: ..... MAY 27, 2010