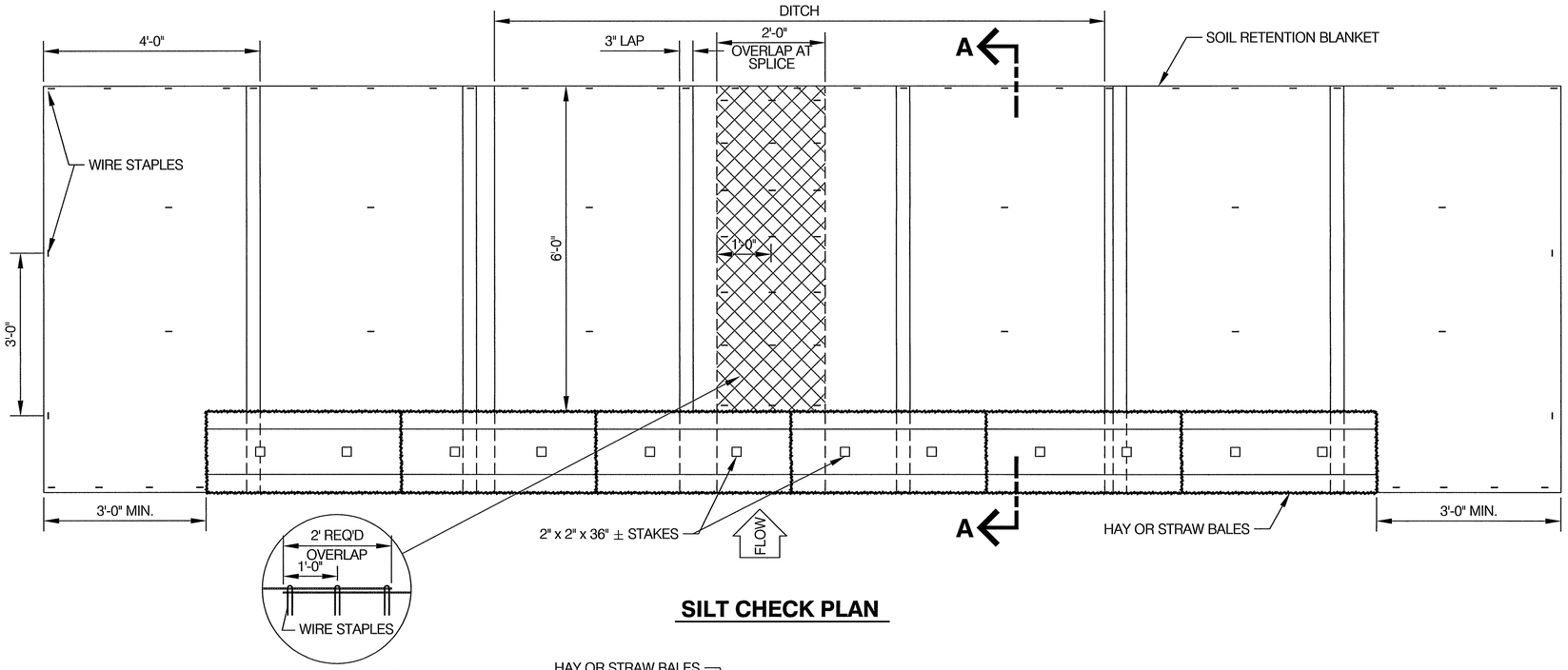

SILT CHECK PLAN

FILTER FABRIC SPLICE DETAIL

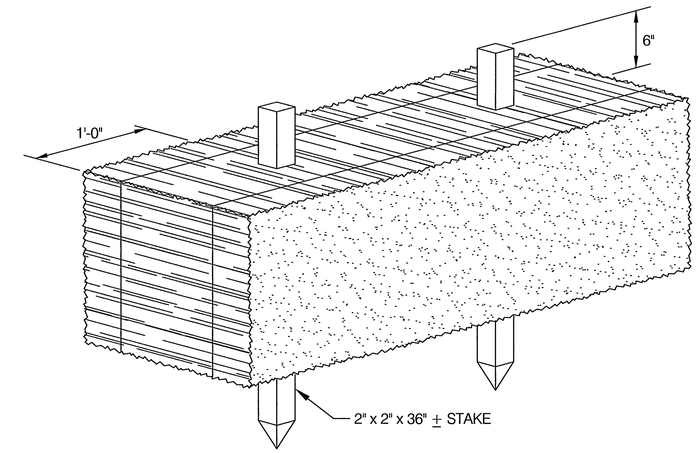

HAY BALE STAKING DETAIL

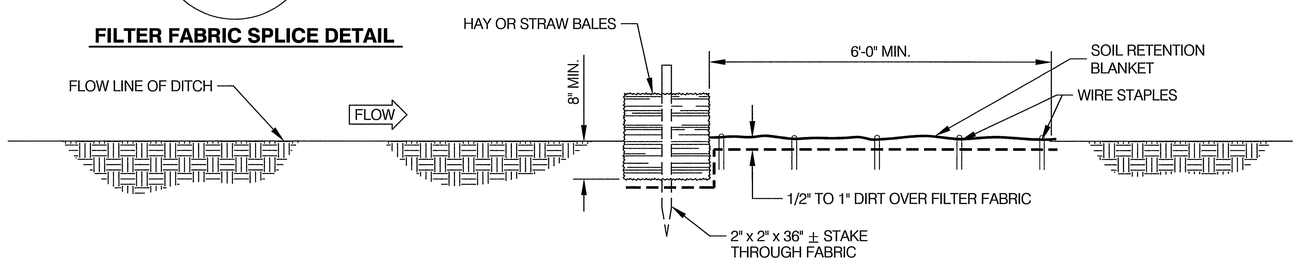

SECTION A-A

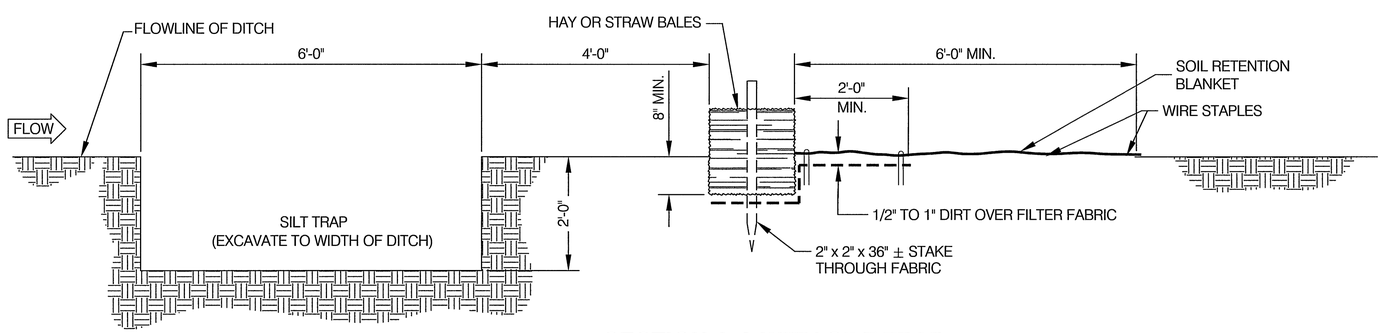

SECTION A-A WITH SILT TRAP

NOTES

1. BALES SHALL BE PLACED AT THE TOE OF A SLOPE OR ON THE CONTOUR AND IN A ROW WITH ENDS TIGHTLY ABUTTING THE ADJACENT BALES.
2. EACH BALE SHALL BE EMBEDDED IN THE SOIL A MINIMUM OF (8) INCHES, AND PLACED SO THE BINDINGS ARE HORIZONTAL.
3. BALES SHALL BE SECURELY ANCHORED IN PLACE BY EITHER TWO STAKES OR RE-BARS DRIVEN THROUGH THE BALE. THE FIRST STAKE IN EACH BALE SHALL BE DRIVEN TOWARD THE PREVIOUSLY LAID BALE AT AN ANGLE TO FORCE THE BALES TOGETHER. STAKES SHALL BE DRIVEN FLUSH WITH THE BALE.
4. SOIL RETENTION BLANKET SHALL CONFORM TO SECTION 809 OF THE "STANDARD SPECIFICATIONS". GEOTEXTILE FILTER FABRIC SHALL CONFORM TO "CITY OF OMAHA, SOIL EROSION AND SEDIMENTATION CONTROL MANUAL".
5. INSPECTION SHALL BE FREQUENT AND REPAIR REPLACEMENT SHALL BE MADE PROMPTLY AS NEEDED.
6. BALES SHALL BE REMOVED WHEN THEY HAVE SERVED THEIR USEFULNESS SO AS NOT TO BLOCK OR IMPEDE STORM FLOW OR DRAINAGE.
7. THE MAXIMUM CONTRIBUTING DRAINAGE AREA SHALL BE 5 ACRES.

DESIGN ENGINEER CITY ENGINEER	CITY OF OMAHA PUBLIC WORKS DEPARTMENT		
	HAY BALE SILT CHECK	STANDARD PLATE **5-02**	SHEET 1/1
		ISSUE DATE: ..... MARCH 26, 2003	