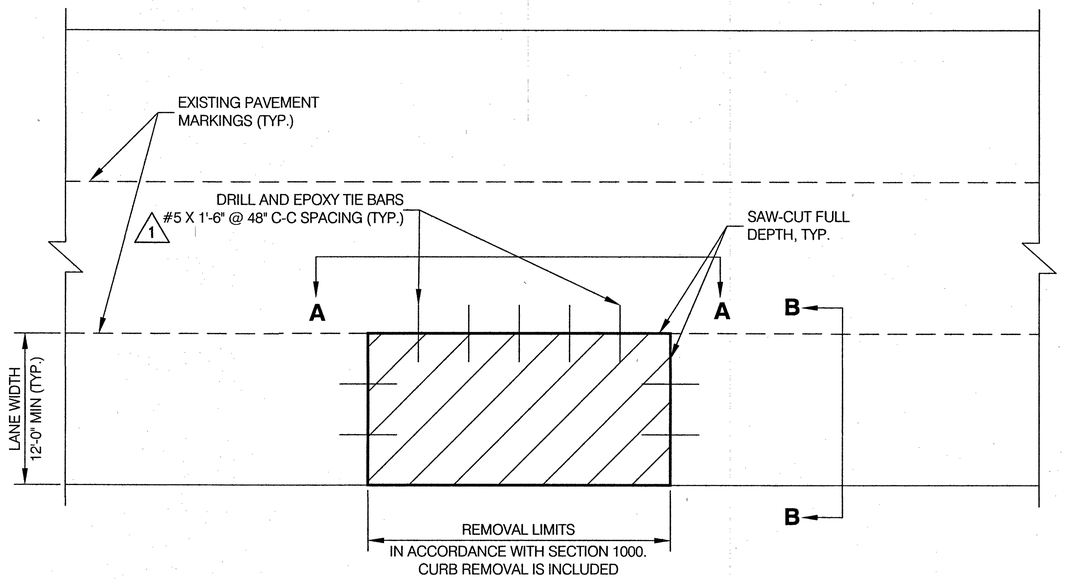

ASPHALT SURFACE PAVEMENT REPAIR PLAN (LARGE AREA)

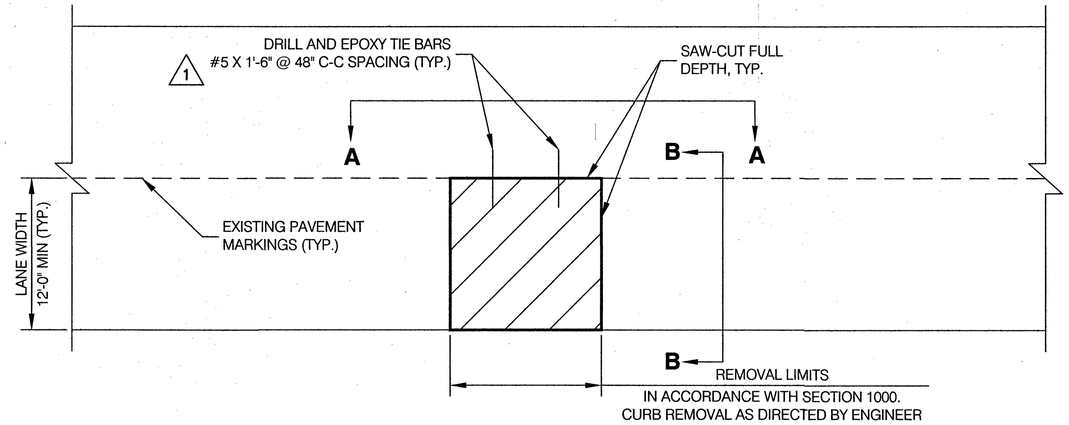

ASPHALT SURFACE PAVEMENT REPAIR PLAN (SMALL AREA)

* BARS ARE TO BE DRILLED @ HALF THE DEPTH OF EXISTING RIGID PAVEMENT, TYP.

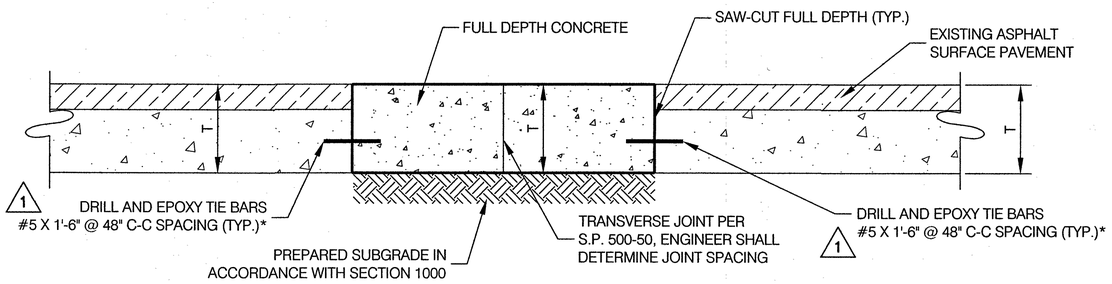

ASPHALT SURFACE PAVEMENT SECTION (LARGE AREA)

SECTION A-A

* BARS ARE TO BE DRILLED @ HALF THE DEPTH OF EXISTING RIGID PAVEMENT, TYP.

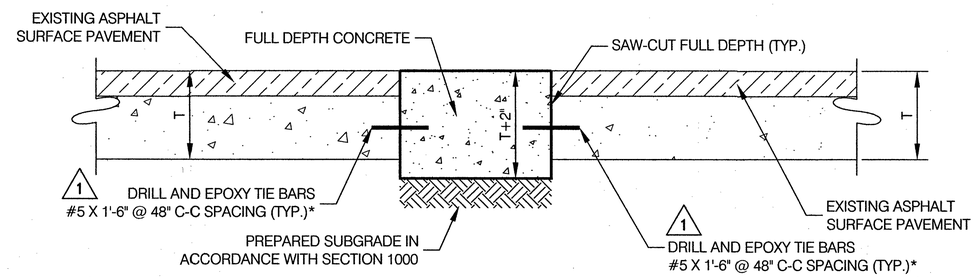

ASPHALT SURFACE PAVEMENT SECTION (SMALL AREA)

SECTION A-A

* BARS ARE TO BE DRILLED @ HALF THE DEPTH OF EXISTING RIGID PAVEMENT, TYP.

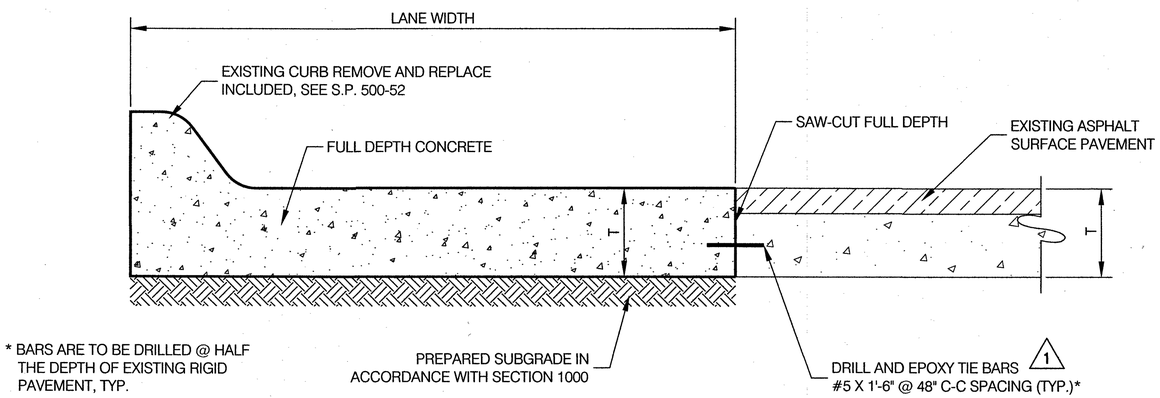

* BARS ARE TO BE DRILLED @ HALF THE DEPTH OF EXISTING RIGID PAVEMENT, TYP.

ASPHALT SURFACE PAVEMENT SECTION (LARGE AREA)

SECTION B-B

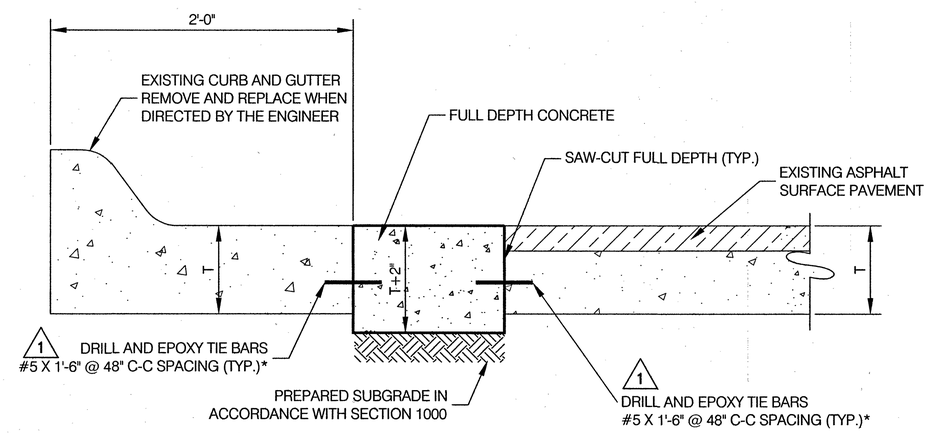

ASPHALT SURFACE PAVEMENT SECTION (SMALL AREA)

SECTION B-B

* BARS ARE TO BE DRILLED @ HALF THE DEPTH OF EXISTING RIGID PAVEMENT, TYP.

1	6/19/2015	DESIGN ENGINEER CITY ENGINEER	CITY OF OMAHA PUBLIC WORKS DEPARTMENT PAVEMENT REPAIR	STANDARD PLATE **1000-03** SHEET 2/4 ISSUE DATE: ... DECEMBER 10, 2013