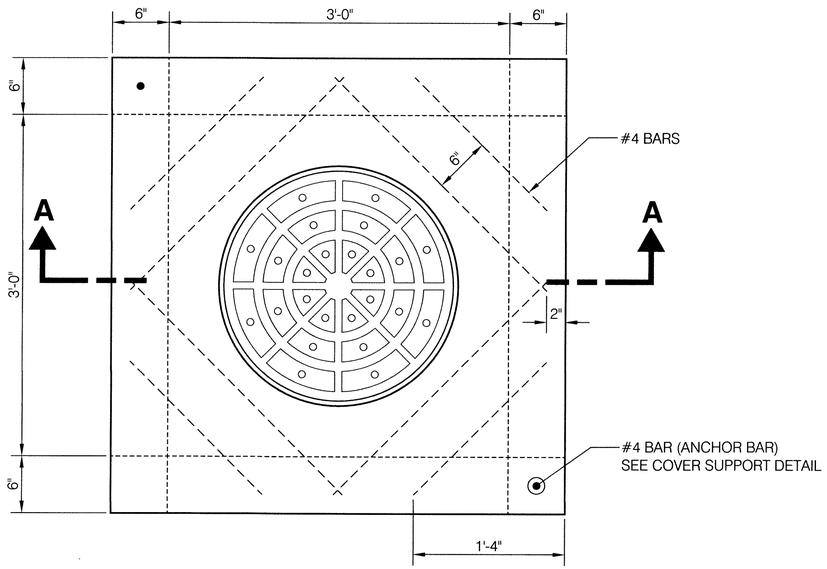

PLAN VIEW

SCALE : 1 1/2" = 1'-0"

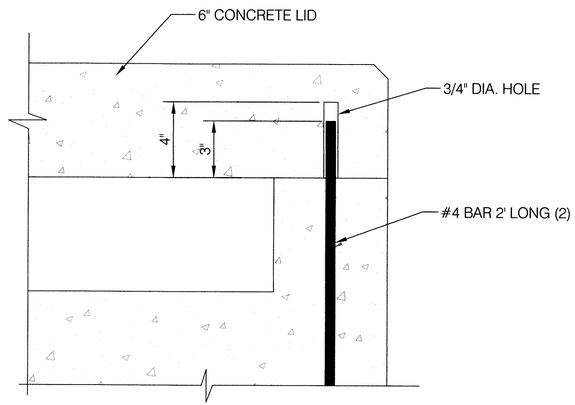

COVER SUPPORT DETAIL

SCALE : 1 1/2" = 1'-0"

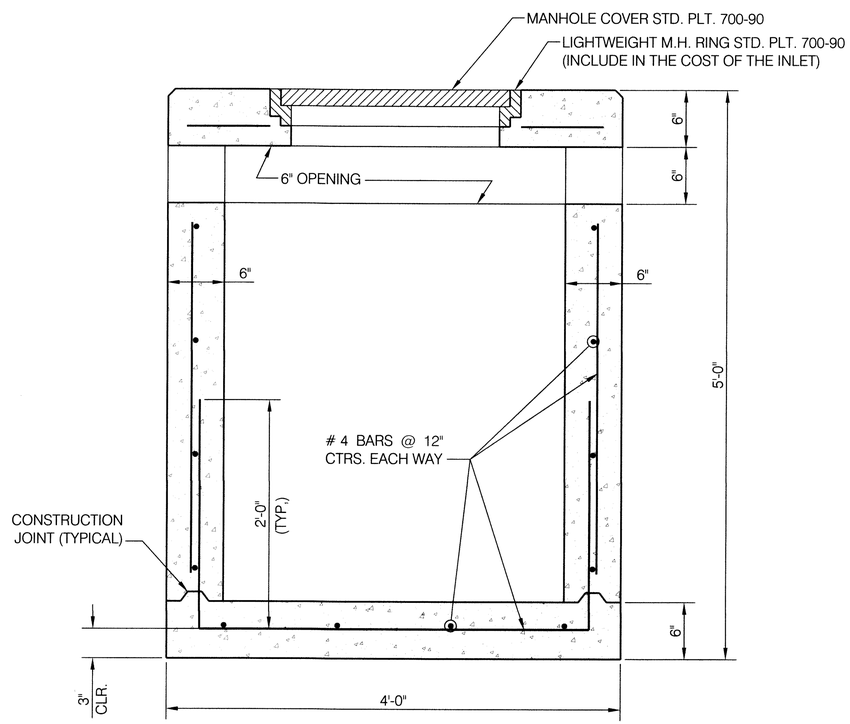

SECTION A-A

SCALE : 1 1/2" = 1'-0"

NOTES

1. LEAD PIPE - ANY SIZE UP TO 30" MAY BE INSTALLED IN ANY WALL.
2. OPENINGS - NUMBER & LOCATION TO FIT FIELD CONDITIONS.
3. ALL EXPOSED EDGES OF BOX TO BE CAMFERED.
4. ALL REINFORCING STEEL SHALL CLEAR ALL SURFACES BY 2".
5. CONCRETE SHALL BE CLASS L65M.
6. REINFORCING STEEL SHALL BE DEFORMED BARS IN ACCORDANCE WITH ASTM A615 GRADE 60.
7. REINFORCING SHALL BE PLACED WITH A TOLERANCE OF -1/4" AND +1/2" ON CLEARANCE.

Kirk R Pfeff DESIGN ENGINEER Todd P Kiter CITY ENGINEER	CITY OF OMAHA PUBLIC WORKS DEPARTMENT **AREA INLETS** TYPE 1	**STANDARD PLATE 700-17**	SHEET 1/2
		ISSUE DATE: ... DECEMBER 10, 2013	