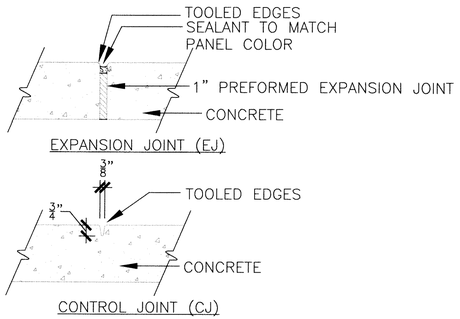

JOINTS (TYP)

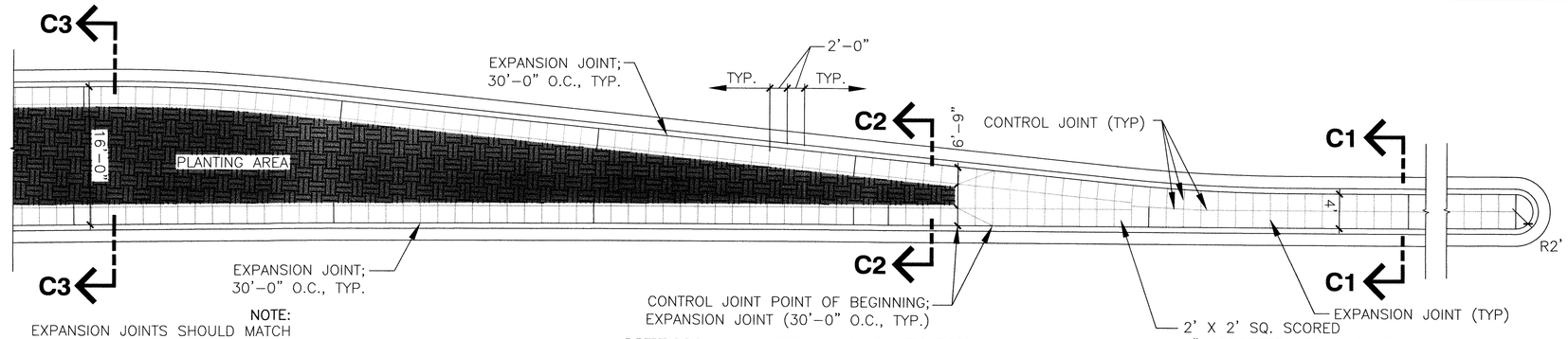

NOTE:
EXPANSION JOINTS SHOULD MATCH UP WITH CURB JOINTS

MEDIAN PLANTER AREA - PLAN

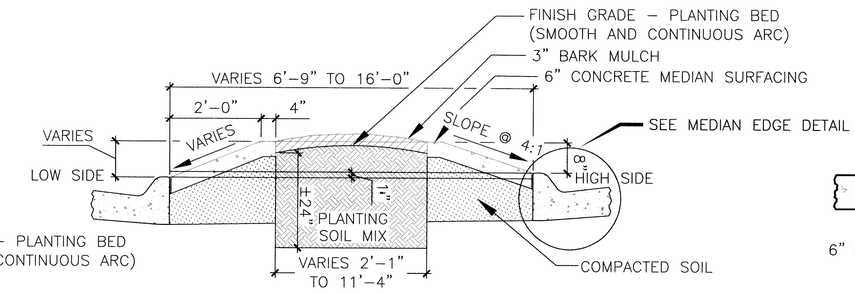

SECTION C2-C2 (MEDIAN TRANSITION)

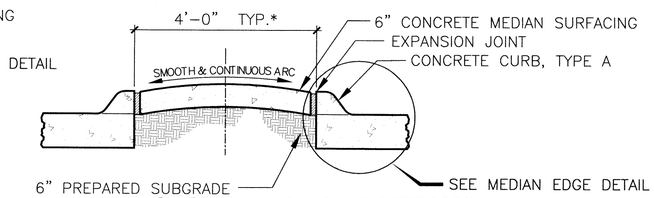

SECTION C1-C1 (4' MEDIAN)

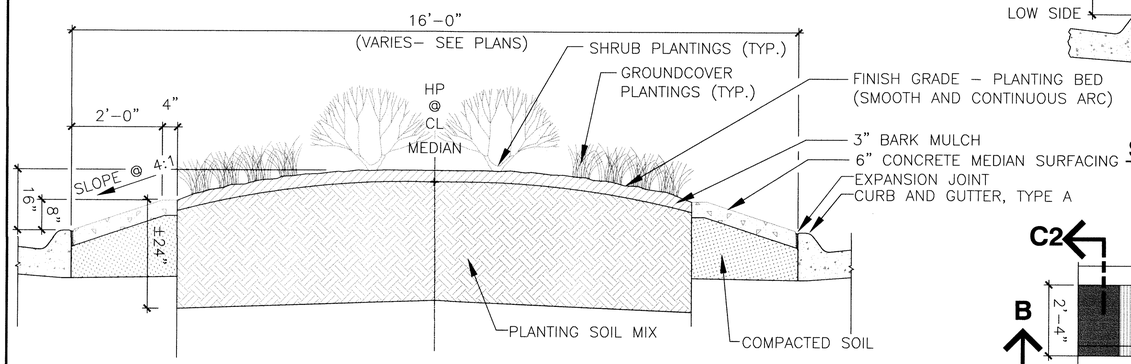

SECTION C3-C3 16' (MEDIAN TRANSITION)

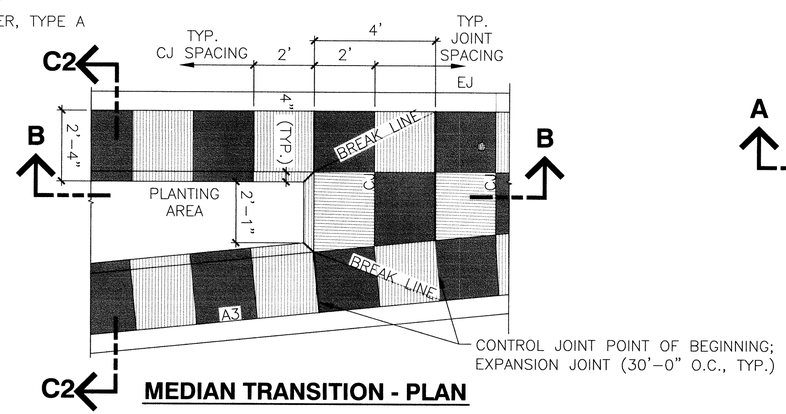

MEDIAN TRANSITION - PLAN

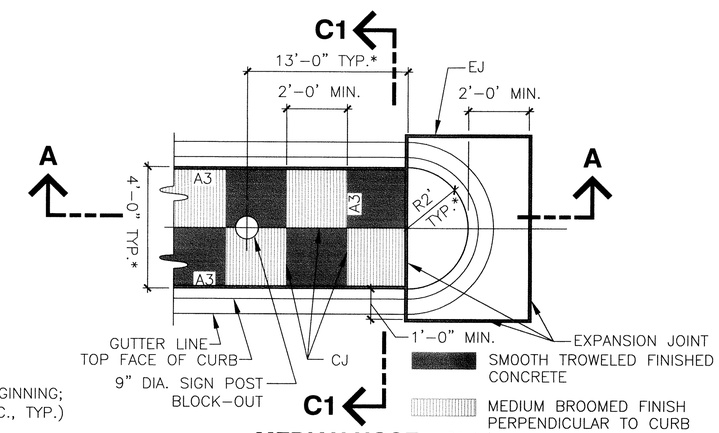

MEDIAN NOSE - PLAN

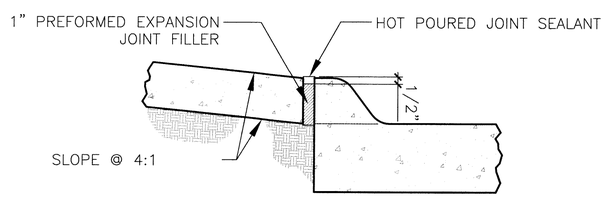

MEDIAN EDGE DETAIL

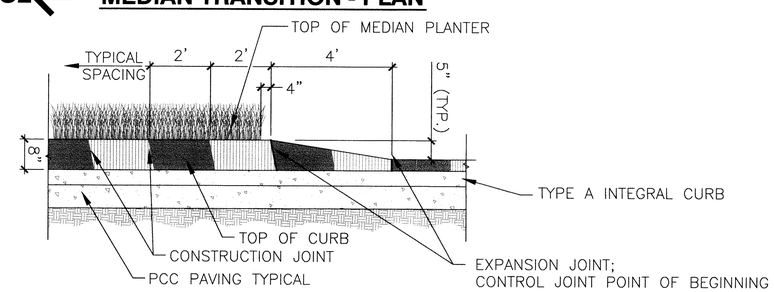

SECTION B-B (MEDIAN TRANSITION - ELEVATION)

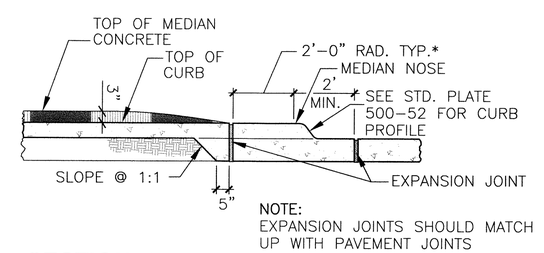

NOTE:
EXPANSION JOINTS SHOULD MATCH UP WITH PAVEMENT JOINTS

SECTION A-A (MEDIAN NOSE - ELEVATION)

NOTES

1. CONCRETE MEDIAN SURFACING AND MEDIAN NOSE SHALL BE CONSTRUCTED IN CONFORMANCE WITH SECTION 500 OF THE STANDARD SPECIFICATIONS AND SPECIAL PROVISIONS. PREPARE SUBGRADE IN ACCORDANCE WITH SECTION 200.
2. CONCRETE MEDIAN SURFACING SHALL BE TEXTURED WITH A PATTERN AS NOTED IN THIS PLAN. AT A MINIMUM CONCRETE SHALL BE L65.
3. THICKNESS " T " OF CONCRETE MEDIAN SURFACING SHALL BE 6" UNLESS OTHERWISE SPECIFIED IN THE PLANS.
4. ALL CONTROL JOINTS SHALL BE CONSTRUCTED IN ALL MEDIANS AS SHOWN ON THIS PLAN. JOINT DEPTH SHALL BE 3/4".
5. 1" PREFORMED EXPANSION JOINT MATERIAL SHALL BE PLACED TRANSVERSELY THROUGH MEDIAN AT 30' MAXIMUM INTERVALS. PREFORMED JOINT MATERIAL SHALL CONFORM TO SECTION 500 OF THE STANDARD SPECIFICATIONS.
6. ALL PREFORMED EXPANSION JOINTS SHALL BE SEALED WITH HOT POURED JOINT SEALANT CONFORMING TO SECTION 500 OF THE STANDARD SPECIFICATIONS.
7. TRANSVERSE AND LONGITUDINAL CONTROL JOINTS SHALL NOT BE FILLED.

	DESIGN ENGINEER CITY ENGINEER	CITY OF OMAHA PUBLIC WORKS DEPARTMENT **CONCRETE MEDIANS**	**STANDARD PLATE 500-54** SHEET 1/2 ISSUE DATE: ..... DECEMBER 10, 2013